Original Operating Instructions

Document no.: 150000764_06_us
Status: 05/09/2019

Precision Forage Harvester

BiG X 480

From machine no.: 1022909

Contact

Mailing address	**Physical address**
Krone North America, Inc.	Krone North America, Inc.
P.O. Box 18880	3363 Miac Cove
Memphis, TN 38181-0880	Memphis, TN 38118
USA	USA
Phone	+1 901 842-6011
Fax	+1 901 842-6016
E-mail	info@krone-northamerica.com
Internet	www.krone-northamerica.com

Information for enquiries and orders

Type	
Vehicle identification number	
Year of manufacture	

Contact data of your dealer

1 Information on This Document

1.1 Validity

This document is valid for machines of type:

BiG X 480
All information, illustrations and technical data in this document correspond to the latest state at the time of publication.

We reserve the right to make design changes at any time and without notification of reasons.

1.2 Re-ordering

If this document has become unusable in whole or in part, you can order a replacement, quoting the document number on the cover sheet. The document can additionally be downloaded via the KRONE Media Center http://www.mediathek.krone.de//.

1.3 Applicable documents

To ensure that the machine is used safely and as intended, observe the following further applicable documents.

- Operating instructions for diesel engine, MTU Friedrichshafen GmbH
- Fuel specification for diesel engine, MTU Friedrichshafen GmbH
- Maintenance instructions for diesel engine, MTU Friedrichshafen GmbH
- Operating instructions for prefilter for diesel fuel, HYDAC
- Operating instructions for header, KRONE
- Operating instructions for transport wagon, KRONE
- Circuit diagram, KRONE
- Spare parts list, KRONE

1.4 Target group of this document

This document aims at the operator of the machine who fulfills the minimum requirements of personnel qualification,*refer to page 19*.

1.5 How to use this document

1.5.1 Directories and references

Contents/headers

The contents and headers in this document ensure quick orientation in the chapters.

Index

The index contains catchwords in alphabetical order which enable to find information on a desired topic easily. The index can be found on the last pages of this document.

Cross references

Cross references to another place in the document or to another document are in the text with page number.

Examples:

- Check all screws on the machine for firm attachment,*refer to page 14*. (**INFORMATION**: If you use this document in electronic form, you get to the link to the stated page by clicking with the mouse.)
- For further information, refer to the operating instructions of the universal shaft manufacturer.

1.5.2 Information on direction

Directional information in this document, such as front, rear, right and left, applies in the direction of travel of the machine.

1.5.3 Term “machine”

Throughout the rest of this document, the “exact forage harvester” will also be referred to as the “machine”.

1.5.4 Figures

The figures in this document do not always represent the exact machine type. The information that refers to the figure always corresponds to the machine type of this document.

1.5.5 Scope of the document

In addition to standard equipment, accessories kits and versions of the machine are described in this document. Your machine may deviate from this document.

1.5.6 Means of representation

Icons in the text

The following means of representation (icons) are used to present the text more clearly:

▶ This arrow characterizes an **action step**. Several arrows in a row identify a sequence of actions to be performed step by step.

✓ This icon identifies a **prerequisite** that has to be fulfilled to perform an action step or a sequence of actions.

⇨ This arrow marks the **intermediate result** of an action step.

➡ This arrow identifies the **result** of an action step or sequence of actions.

● This bullet point identifies an **enumeration**. If the bullet point is intended, it identifies the second level of the enumeration.

Icons in figures

The following icons can be used in illustrations:

Icon	Explanation	Icon	Explanation
1	Reference sign for part	I	Position of a part (e.g. move from position I to position II)
X	Dimensions (e. g. also W = width, H = height, L = length)		Magnification of display detail
LH	Left side of machine	RH	Right side of machine
	Direction of travel		Direction of motion
——	Reference line for visible material	-----	Reference line for covered material
-·-·-	Centre line	——	Cable routes
	Open		Closed
	Apply liquid lubricant (e.g. lubricating oil)		Apply lubricating grease

Warning signs

Warnings of dangers are separated from the remaining text as warning signs and are identified with a danger sign and signal words.

The warning signs must be read and the measures must be observed in order to prevent personal injury.

Explanation of danger sign

This is the danger sign that warns of a risk of injury.

Please observe all notes marked with the danger sign in order to avoid injuries or death.

Explanation of signal words

DANGER
The signal word DANGER warns of a hazardous situation which will result in serious injuries or death if the warning sign is ignored.

WARNING
The signal word WARNING warns of a hazardous situation which will result in serious injuries or death if the warning sign is ignored.

CAUTION
The signal word CAUTION warns of a hazardous situation which will result in minor to moderate injuries if the warning sign is ignored.

Example of a warning sign:

⚠ WARNING

Eye damage caused by flying dirt particles

When cleaning with compressed air, dirt particles are ejected at high speed and could get into the eyes. Therefore eyes could be hurt.

- ▶ Keep people away from the working area.
- ▶ Wear personal protective equipment when performing cleaning work with compressed air (e.g. eye protection).

Warnings of property damage/environmental damage

Warnings of property/environmental damage are separated from the remaining text and marked with "Notice".

Example:

NOTICE

Gearbox damage due to low oil level

The gearboxes could be damaged when the oil level is too low.

- ▶ Check gear oil level at regular intervals and top up oil, if necessary.
- ▶ Check gear oil level approx. 3 to 4 hours after the machine has been switched off. Check oil level only when machine is in horizontal position.

Notes with information and recommendations

Additional information and recommendations for trouble-free and productive operation of the machine are separated from the remaining text and marked with “Information”.

Example:

INFORMATION

Each safety label is provided with an order number and can be ordered directly from the manufacturer or from the authorized specialist dealer.

1.5.7 Conversion table

The following table can be used to convert metric units into US units.

Size	SI units (metric)		Factor	Inch-pound units	
	Unit name	Abbreviation		Unit name	Abbreviation
Area	Hectare	ha	2.47105	Acre	acres
Volume flow	Litres per minute	L/min	0.2642	US gallons per minute	gpm
	Cubic metres per hour	m³/h	4.4029		
Force	Newton	N	0.2248	Pound force	lbf
Length	Millimetre	mm	0.03937	Inch	in.
	Metre	m	3.2808	Foot	ft.
Power	Kilowatt	kW	1.3410	Horsepower	hp

Size	SI units (metric)		Factor	Inch-pound units	
	Unit name	Abbrevi-ation		Unit name	Abbrevi-ation
Pressure	Kilopascal	kPa	0.1450	Pounds per square inch	psi
	Megapascal	MPa	145.0377		
	bar (non-SI)	bar	14.5038		
Torque	Newtonmeter	Nm	0.7376	pound-foot or foot-pound	ft·lbf
			8.8507	pound-inch or inch-pound	in·lbf
Temperature	Degrees Celsius	°C	°Cx1.8+32	Degrees Fahrenheit	°F
Velocity	Metres per minute	m/min	3.2808	Feet per minute	ft/min
	Metres per second	m/s	3.2808	Feet per second	ft/s
	Kilometres per hour	km/h	0.6215	Miles per hour	mph
Volumes	Litres	L	0.2642	US gallon	US gal.
	Millilitre	ml	0.0338	US ounce	US oz.
	Cubic centi-metre	cm^3	0.0610	Cubic inch	in^3
Weight	Kilogram	kg	2.2046	Pound	lbs

2 Safety

2.1 Intended use

This machine is a self-propelled forage harvester and is used to chop crops.

The crops designated for the intended use of this machine in conjunction with

- a KRONE XCollect are harvested thick-stemmed forage plants, e.g. maize plants,
- a KRONE EasyCollect are harvested thick-stemmed forage plants, e.g. maize plants,
- a KRONE XDisc are mown stalk and leaf crops,
- a KRONE EasyFlow collected stalk and leaf crops,
- a header for smallwood crops from cut groves.

The machine is designed exclusively for use in agriculture and may only be used when

- all safety installations specified in the operating instructions are present and in safety position;
- all safety information in the operating instructions are known and observed; this goes for those in the chapter "Basic safety information", *refer to page 19* as well as for those comprised directly in the chapters of the operating instructions.

The machine may be used only by people who satisfy the personnel qualification requirements designated by the machine manufacturer, see *refer to page 19*.

These operating instructions are part of the machine and must therefore be at hand when the machine is in use. The operation of the machine is permitted only after respective instruction and in compliance with these operating instructions.

If the machine is used for applications which are not described in these operating instructions, this may result in serious injuries or death and damage to the machine and other property.

Unauthorised modifications to the machine may affect the properties of the machine or disrupt the proper operation. For this reason, unauthorised modifications shall exclude any liability of the manufacturer for consequential damage.

Intended use also comprises compliance with the terms of operation, maintenance, and repair specified by the manufacturer.

2.2 Reasonably foreseeable misuse

Any use beyond the intended use*refer to page 18* is regarded as improper use and is therefore misuse according to the Machinery Directive. The manufacturer is not liable for damage resulting from this, the user alone bears the risk.

Such misuse is for example:

- Processing of crops which are outside the intended use of the machine,*refer to page 18*
- Transport of people
- Transport of goods
- Exceeding the permitted technical gross weight
- Non-compliance with the safety labels on the machine and safety notes in the operating instructions
- Performing troubleshooting, setting, cleaning, repair and maintenance work contrary to the information in the operating instructions
- Unauthorised modifications to the machine
- Attachment of unauthorised or unapproved additional equipment
- Use of spare parts which are not KRONE original spare parts
- Stationary operation of the machine

Unauthorised modifications to the machine may affect the properties of the machine or disrupt proper operation. For this reason, unauthorised modifications will exclude any liability of the manufacturer for consequential damage.

2.3 Service life of the machine

- The service life of this machine depends on its proper operation and maintenance as well as the operating and harvesting conditions.
- By heeding the instructions and information in these operating instructions, permanent operational readiness and a long service life of the machine can be achieved.
- After each operating season, inspect the entire machine for wear and other damage.
- Replace damaged and worn components before recommissioning the machine.
- Carry out a full technical inspection of the machine after five years of machine operation and make a decision on further machine usage taking the results of this inspection into account.
- Theoretically, the service life of this machine is unlimited as all worn or damaged components can be replaced.

2.4 Basic safety instructions

Non-compliance with the safety instructions and warnings

Non-compliance with the safety instructions and warnings may result in injuries and damage to the environment and property.

2.4.1 Importance of operating instructions

The operating instructions are an important document and a part of the machine. They are intended for the user and contain information relevant to safety.

Only the procedures indicated in the operating instructions are reliable. If the operating instructions are not followed, people may be seriously injured or killed.

- ▶ Before using the machine for the first time, read and follow all the "Basic safety instructions".
- ▶ Before working, also read and observe the respective sections in the operating instructions.
- ▶ Keep the operating instructions easily accessible for the machine user at all times.
- ▶ Hand over the operating instructions to subsequent users.

2.4.2 Personnel qualification of the operating personnel

If the machine is not used properly, people may be seriously injured or killed. To avoid accidents, each person who works with the machine must satisfy the following minimum requirements:

- He is physically capable of controlling the machine.
- He can work safely with the machine in accordance with these operating instructions.
- He understands the method of operation of the machine within the scope of his work and can identify and avoid the dangers associated with the work.
- He has read the operating instructions and can implement the information in the operating instructions accordingly.
- He is familiar with driving vehicles safely.
- For road travel he has adequate knowledge of the highway code and has the stipulated driving licence.

2.4.3 Personnel qualification of the technicians

If the work (assembly, conversion, modification, extension, repairs, retrofitting) is performed improperly on the machine, people may be seriously or fatally injured. To avoid accidents, everyone who performs work according to these instructions must meet the following minimum requirements:

- Qualified professional, with relevant training.
- Capable of assembling the (partially) disassembled machine according to the assembly instructions provided by the manufacturer.
- Capable of extending, modifying or repairing the function of the machine according to the relevant instructions provided by the manufacturer.
- Ability to perform the work safely according to these instructions.
- Understands the mode of operation of the work to be performed and the machine and is able to identify and avoid risk in carrying out the necessary work.
- Has read these instructions and is able to implement the information explained in these instructions accordingly.

2.4.4 Children in danger

Children are not in a position to assess dangers and behave unpredictably.

Thus children are particularly at risk.

- Children are especially at risk when climbing up and down the machine.
- There is no possibility to secure children sufficiently on the self-propelled machine.
- Vibrations can be particularly harmful to children's bodies.
- Children may initiate dangerous movements of the machine.

▶ Never take children on the self-propelled harvester.

▶ Keep children away from the machine.

▶ Keep children away from consumables.

▶ Make sure that there are no children in the danger zone, especially when starting and triggering machine movements.

2.4.5 Connecting the machine

If headers or trailers not connected properly to the forage harvester, serious accidents could be caused.

▶ When connecting, observe the following operating instructions:

- the header operating instructions
- the trailer operating instructions
- the machine operating instructions
- the universal shaft operating instructions

▶ Follow the coupling instructions:

- for headers *refer to page 305* und *refer to page 321*.
- for trailers *refer to page 363*

▶ Observe the changed driving behaviour of the combination.

2.4.6 Structural modifications on the machine

Structural changes and enhancements may impair the functionality and operational safety of the machine. People may be seriously injured or killed as a result.

Structural changes and enhancements are not permitted.

2.4.7 Additional equipment and spare parts

Additional equipment and spare parts that do not correspond to the requirements of the manufacturer may affect the operational safety of the machine and cause accidents.

- ▶ To ensure operational safety, use original parts or standard parts which correspond to the requirements of the manufacturer.

2.4.8 Jobs on the machine

Control of moving machine

The moving machine requires that the driver/operator is able to react quickly at any time. Otherwise, the machine may move uncontrollably and cause serious injuries and death.

- ▶ Start the engine from the driver's seat only.
- ▶ While the vehicle is travelling, never leave the driver's seat.
- ▶ Never climb in or out of the machine while the machine is moving.

Control of the machine during operation

While the machine is in operation, always ensure that the drivers/operators can intervene quickly at any time in the machine control. Otherwise, the machine may move in an uncontrolled manner and seriously injure or kill people.

While the machine is in operation, the driver/operator must be in the cabin or near the grinding control unit.

On-board instructors when using the machine for work (passenger seat)

On-board instructors may fall and be injured due to movements of the machine.

- Never use the passenger seat for road travel.
- Use the passenger seat for instruction purposes during operation in the field only.

Passengers

Passengers may be seriously injured by the machine or fall off the machine and run over. Ejected objects may strike and injure passengers.

- ▶ Never carry passengers on the machine.

2.4.9 Operational safety: Technically sound condition

Operation is only allowed after proper start-up

The operational safety of the machine is not ensured when it is not started up properly according to these operating instructions. Thus accidents may be caused and persons may be seriously injured and killed.

- ▶ Only use the machine after proper start-up, *refer to page 218*.

Technically sound state of the machine

Improper maintenance and setting could influence the operational safety of the machine and cause accidents. Thus there is a risk of serious injuries or death.

- ▶ All maintenance and setting work must be performed according to the chapters “Maintenance and Setting”.
- ▶ Before performing any maintenance and setting work, shut down and safeguard the machine, *refer to page 34*.

Danger resulting from damage to the machine

Damage to the machine may impair the operational safety of the machine and cause accidents. As a result, people may be seriously injured or killed. The following parts of the machine are particularly important for safety:

- Brakes
- Steering
- Safety Devices
- Connecting devices
- Lighting
- Hydraulics
- Tyres
- Universal shaft

If there are doubts about the operational safety of the machine, for example due to an unexpected change to the operational behaviour, visible damage or leaking consumables:

- ▶ Shut down and safeguard the machine, *refer to page 34*.
- ▶ Immediately eliminate potential causes of damage, for example heavy soiling, or tighten slack screws.
- ▶ Determine the cause of damage according to these operating instructions and repair the damage, if possible, *refer to page 569*.
- ▶ In case of damage which may affect operational safety and cannot be repaired according to these operating instructions: Have damage repaired by a qualified service centre.

Technical limit values

If the technical limit values of the machine are not observed, the machine may be damaged. As a result, accidents may occur and people may be seriously or fatally injured. With regard to safety, it is especially important to observe the following technical limit values:

- Maximum permitted total weight
- Maximum permitted axle loads
- Maximum permitted trailer load
- Maximum permitted drawbar load
- Maximum permitted transport height and width
- Maximum permitted speed

- ▶ Comply with limit values, *refer to page 64*.

2.4.10 Danger zones

If the machine is switched on, its surrounding can present a danger zone.

Avoid entering the danger zone of the machine by observing the minimum safety distance.

If the safety distance is not observed, people may be seriously injured or killed.

- ▶ Do not switch on the drives and engine if the minimum safety distance has not been observed.
- ▶ If people fail to observe the minimum safety distance, switch off the drives.
- ▶ Switch the machine off in shunting and field mode.

The safety distance is:

For machine in shunting operation and field mode	
In front of the machine	30 m
Behind the machine	5 m
Laterally to the machine	3 m

For machine switched on without driving motion	
In front of the machine	3 m
Behind the machine	5 m
Laterally to the machine	3 m

The safety distances specified here are minimum distances in terms of intended use. If necessary, these safety distances must be increased according to the operating and ambient conditions.

- ▶ Before working in the danger zone of the machine: Shut down and secure the machine, *refer to page 34*. This also applies to brief inspection work.
- ▶ Consider the information in all relevant operating instructions:

- The operating instructions of the machine
- The operating instructions of the universal shaft
- The operating instructions of the header
- The operating instructions of the transport wagon

Danger zone universal shaft

People may be caught, pulled in and seriously injured by the universal shaft.

- ▶ Observe operating instructions of universal shaft.
- ▶ Ensure sufficient overlap of section tube and universal shaft guards.
- ▶ Make sure that the universal shaft guards are mounted and that they are fully functional.
- ▶ Allow the universal shaft locks to engage.
- ▶ Attach chains to prevent the universal shaft guards from rotating with the shaft.
- ▶ Make sure that there is no one in the danger zone of PTO shaft and universal shaft.
- ▶ Ensure that the selected speed and direction of rotation of the PTO shaft of the self-propelled harvester match the permitted speed and direction of rotation of the header.
- ▶ Switch off the PTO shaft when the angles between the universal shaft and the PTO shaft are too large. The machine may be damaged. Parts may be hurled up and cause injury to people.

Danger zone PTO shaft

People may be caught, pulled in and seriously injured by the PTO shaft and the driven components.

Before switching on the PTO shaft:

- ▶ Ensure that all protective devices are mounted and brought into protective position.
- ▶ Make sure that there is no one in the danger zone of PTO shaft and universal shaft.
- ▶ Switch off drives if they are not needed.

Danger zone between precision forage harvester and header

People staying between precision forage harvester and header may be seriously hurt or killed caused by precision forage harvester rolling away, carelessness or machine movements.

- ▶ Prior to all work between the precision forage harvester and header: Stop the machine and secure it, *refer to page 34*. This also applies to brief inspection work.
- ▶ If the lifting unit has to be actuated, keep all people away from the range of movement of the header.

Danger zone when drive is switched on

When the drive is switched on, there is a danger to life caused by rotating machine parts. Ensure that there are no persons in the danger zone of the machine.

- ▶ Before starting the machine, instruct all people to leave the danger zone of the machine.
- ▶ In case of dangerous situations, immediately switch off drives and instruct people to leave the danger zone.

Danger zone quick coupler

People may be caught, pulled in and seriously injured by the quick coupler and the driven components.

Before switching on the quick coupler:

- ▶ Mount all safety devices and move them to protective position.
- ▶ Ensure that there is no one in the danger zone of machine or universal shaft.
- ▶ Switch off drives in case they are not needed.

Danger zone due to trailing machine parts

If machine parts are trailing, people may be seriously injured or killed.

After the drives have been switched off, the following machine parts will trail:

- Universal shaft
- Drive belt
- Fan
- Rotating screen
- Chopping drum

The following machine parts of the crop flow may coast:

- Header
- Intake rollers
- Corn conditioner
- Discharge accelerator

If all machine parts of the crop flow have still not come to a standstill 10 s after the machine has been switched off by the main drive brake, a warning signal sounds. The warning signal sounds until all machine parts have come to a standstill.

If machine parts are trailing, people may be seriously injured or killed.

- ▶ Shut down and safeguard the machine, *refer to page 34*.
- ▶ Do not attempt to approach the machine until all moving machine parts have come to a complete stop.

2.4.11 Ensuring functionality of safety devices

If safety devices are missing or damaged, moving machine parts could seriously hurt or kill persons.

- ▶ Replace damaged safety devices.
- ▶ Mount dismounted safety devices and machine parts again before start-up and move them to protective position.
- ▶ When there are doubts whether all safety devices are functional and have been correctly installed, instruct a specialist workshop to check this.

2.4.12 Personal protective equipment

The wearing of personal protective equipment is an important safety measure. Missing or unsuitable personal protective equipment increases health risks and injuries.

Personal protective equipment is for example:

- Suitable protective gloves
- Safety boots
- Close fitting protective clothing
- Hearing protection
- Safety glasses

- ▶ Specify and provide personal protective equipment for the particular job.
- ▶ Use only personal protective equipment which is in proper condition and offers effective protection.
- ▶ Adjust personal protective equipment to the person, for example the size.
- ▶ Remove unsuitable clothing and jewellery (e.g. rings, necklaces) and cover long hair with a hairnet.

2.4.13 Safety markings on the machine

Safety labels on the machine caution against dangers at danger areas and represent an important part of the safety equipment of the machine. Missing safety labels increase the risk of serious and fatal injuries.

- ▶ Clean dirty safety labels.
- ▶ Make sure every time after cleaning the safety labels that they are complete and legible.
- ▶ Immediately replace missing, damaged and unrecognizable safety labels.
- ▶ Provide spare parts with intended safety labels.

Descriptions, explanations and order numbers of safety labels,*refer to page 35*.

2.4.14 Road safety

Dangers for road travel

If the machine exceeds the maximum dimensions and weights specified by national law and is not correctly lit when travelling on public roads, other road users may be endangered.

- Before driving on roads, ensure that the maximum permitted dimensions, weights and axle, drawbar and trailer loads are not exceeded which apply to driving on public roads according to national law.
- Before driving on roads, switch on the road travel lighting and ensure that it functions properly.
- Before driving on roads, move the main mode switch to the “road mode” position.

Danger when driving on road and field

The self-propelled machine has special driving properties which also depend on the operating state and on the ground. If changed handling characteristics are not considered, the driver may cause accidents.

- Observe measures for driving on road and field,*refer to page 338*.

Dangers if the machine is not prepared properly for road travel

If the machine is not prepared properly for road travel, serious accidents may occur with traffic.

- Before driving on roads, prepare the machine for road travel, *refer to page 338*.

Dangers when cornering with trailed trailer and due to the overall width

Accidents may occur when cornering due to the trailer swinging out and due to the overall width.

- Consider the overall width of the combined tractor and machine.
- Consider the larger swivel range when cornering.
- Consider people, oncoming traffic and obstacles when turning.

Dangers when operating the machine on slopes

The machine may tilt when it is used on slopes. As a result, accidents may occur and people may be seriously injured or killed.

- Do not work and drive on a slope unless the ground of the slope is flat and the adhesion of the tyres to the ground is ensured.
- Turn the machine at low speed. Turn in a large arc.
- Avoid driving across a slope because the centre of gravity of the machine will be changed by payload and by executing machine functions.
- Avoid abrupt steering movements on slopes.
- When driving up and down on a slope, always align the header uphill and keep it as close as possible to the ground.
- Do not move the machine from working position to transport position or from transport position to working position as long as the machine is used across a slope.
- Do not park the machine on slopes.
- Observe procedures for operating the machine on slopes, *refer to page 372*.

2.4.15 Parking the machine safely

An incorrectly parked and insufficiently safeguarded machine can represent a danger for people, especially children, and can be set into motion or fall over in an uncontrolled manner. People may be injured or killed.

- Park the machine on a horizontal and level ground capable of bearing the load.
- Before adjusting, repairing, servicing and cleaning the machine, ensure that it is securely positioned.
- Observe section “Parking the Machine” in chapter Driving and Transport.*refer to page 355*
- Before parking: Shut down and safeguard the machine, *refer to page 34*.

2.4.16 Consumables

Unsuitable consumables

Consumables which do not comply with the requirements of the manufacturer may impair the operational safety of the machine and cause accidents.

- Use only consumables which comply with the requirements of the manufacturer.

For requirements on consumables, *refer to page 67*.

Fuel is harmful

Fuels are carcinogenic. If fuel is swallowed or fuel vapours inhaled, the fuel may cause organ damage.

- Do not inhale the vapours.
- Do not swallow the fuel.
- To prevent skin damage, avoid skin contact with the fuel.
- Wear suitable protective gloves and protective goggles.

Environmental protection and disposal

Consumables such as diesel fuel, brake fluid, antifreeze and lubricants (e.g. gearbox oil, hydraulic oil) may damage the environment and the health of people.

- Do not release consumables into the environment.
- Fill consumables in a liquid-tight labelled container and dispose of according to the official regulations.
- Absorb leaked consumables with an absorbent material, fill them in a liquid-tight labelled container and dispose of according to the official regulations.

2.4.17 Chemicals

Keep cabin free of chemicals

Harmful and aggressive chemicals will pollute the air in the cabin. Harmful and aggressive reactive substances are for example:

- Solvents
- Fuels
- Oils and greases
- Detergents
- Acids

These chemicals may stick to clothing and enter the cabin in this way. Gases and liquids may escape even from closed tanks. The chemicals may impair health and the ability to concentrate. As a result, accidents could be caused.

Electrical components could be damaged, for example control units and plug connections. This may result in fire and accidents caused by malfunctions, system failures or short circuits.

- ▶ Keep the inside of the cabin clean.
- ▶ Do not store or transport any harmful and aggressive chemicals in the cabin.
- ▶ Before entering the cabin, remove clothing which may be contaminated with harmful and aggressive chemicals.
- ▶ Before entering the cabin, remove soil and other substances from shoes or boots. The soil may be contaminated with chemicals.

2.4.18 Dangers arising from environment

Fire hazard

Combustible materials may accumulate in the machine due to operation or animals, such as rodents or nesting birds, or dust resuspension.

In case of dry usage conditions, dust, impurities and crop residue may ignite on hot parts and the resulting fire may seriously injure or kill people.

- ▶ Check and clean the machine every day before using it for the first time.
- ▶ Check and clean the machine regularly during the working day.
- ▶ Regularly check hydraulic oil lines for proper condition and position with sufficient clearance to sharp edges.
- ▶ Regularly check exhaust systems, tubes and turbocharger of engine system. Remove crop residues.
- ▶ While refuelling, do not smoke and do not place the machine near naked flames or explosive sparks.

Life-threatening electric shock from overhead lines

The machine may reach the height of overhead lines with the spout. This may cause voltage to flash over to the machine and cause a fatal electric shock or fire.

- When folding the spout in and out, keep an adequate distance from the power transmission lines.
- Never fold the spout in or out near pylons and power lines.
- When spout is folded out, keep an adequate distance from the power transmission lines.
- To avoid a potential electric shock caused by voltage flashover, never get on and off the machine under overhead lines.

Behaviour in case of voltage flashover of overhead lines

Electroconductive parts of the machine could be subject to high electrical voltage caused by voltage flashover. A voltage drop where major voltage differences are present is created on the ground around the machine in case of voltage flashover. Due to major voltage differences in the ground, you could be killed by electric shocks when you make big steps, lay on the ground or support yourself with your hands.

- Do not leave the cabin.
- Do not touch any metal parts.
- Do not establish any conductive connection to the ground.
- Warn persons: Do not approach the machine. Electrical voltage on the ground may lead to severe electric shocks.
- Wait for help from professional rescue teams. The overhead line must be switched off.

If people have to leave the cabin despite the voltage flashover, for example because there is an imminent threat to life due to fire:

- Avoid simultaneous contact with machine and ground.
- Jump away from the machine. Jump into a safe standing position. Do not touch the machine from the outside.
- Move away from the machine with very small steps. In doing so, make sure that your feet are close to one another.

2.4.19 Sources of danger on the machine

Noise may damage your health

The noise development of the machine during operation may cause health damage such as hardness of hearing, deafness or tinnitus. When using the machine at high rotational speed, the noise level also increases. The emissions value was measured with the cabin closed under conditions according to DIN EN ISO 4254-7, Appendix C, *refer to page 64*.

- Before starting up the machine, estimate the risk caused by noise.
- Depending on the ambient conditions, working hours and the working and operating conditions of the machine, specify and use suitable hearing protection.
- Specify rules for the use of hearing protection and for the working time.
- During operation keep windows and doors of the cabin closed.
- Remove hearing protection for road travel.

Liquids under high pressure

The following liquids are under high pressure:

- Hydraulic oil
- Diesel fuel
- Engine coolant
- Refrigerant for the air conditioning system

Liquids escaping under high pressure may penetrate through the skin and cause severe injuries.

- ▶ Shut down and safeguard the machine and contact qualified specialist workshop upon suspicion of damaged hydraulic system.
- ▶ Never search for leaks with bare hands. Even a very pin-sized hole may lead to serious injuries.
- ▶ When searching for leaks, use suitable aids, e.g. a piece of cardboard to avoid injuries.
- ▶ Keep body and face away from leaks.
- ▶ If liquids penetrate the body, immediately consult a doctor. The liquid must be removed from the body as quickly as possible.

Hot liquids

If hot liquids are drained, people may burn and/or scald themselves.

- ▶ When draining hot consumables, wear personal protective equipment.
- ▶ Before performing any repair, maintenance or cleaning work, allow liquids and machine parts to cool off, if necessary.

Damaged compressor unit

Damaged compressed air hoses of compressor unit may tear off. Hoses that move uncontrollably may hurt people seriously.

- ▶ If it is suspected that the compressor unit is damaged, immediately contact a specialist workshop.
- ▶ Shut down and safeguard the machine, *refer to page 34*.

Damaged hydraulic hoses

Damaged hydraulic hoses may tear off, burst or cause oil leaks. As a result, the machine may be damaged and people may be seriously injured.

- ▶ Shut down and safeguard the machine, *refer to page 34*.
- ▶ If it is suspected that hydraulic hoses are damaged, immediately contact a service centre, *refer to page 528*.

Toxic exhaust gases

Exhaust gases may cause serious health problems or result in death.

- ▶ While the engine is running, provide adequate ventilation to prevent prolonged exposure to exhaust gases.
- ▶ Do not leave the engine running in a closed room unless there is a suitable extraction unit.

Hot surfaces

The following components may become hot during operation and may burn people:

- Engine
- Exhaust system
- Engine piping
- Hydraulic system
- Gearbox

▶ Maintain an adequate distance from hot surfaces and adjacent components.

▶ Leave machine parts to cool down and wear protective gloves.

2.4.20 Dangers in connection with certain activities: climbing up and down

Climbing up and down safely

People who behave carelessly when climbing up an down may fall off the ladder. People, who climb onto the machine without using the designated ladders, may slip, fall and seriously injure themselves.

Dirt as well as operating fluids and lubricants may impair surefootedness and stability.

▶ Always keep ladder steps and platforms clean and in proper condition so that you can step and stay safely.

▶ Never climb up and down while the machine is moving.

▶ Always climb up and down with the face towards the machine.

▶ When climbing up and down, maintain a three-point contact with the steps and hand rails (always two hands and one foot or two feet and one hand on the machine).

▶ When climbing up and down, never use operating elements as handles. Inadvertent activation of the operating elements may cause functions to be unintentionally actuated which could be hazardous.

▶ When climbing down, never jump off the machine.

▶ Climb up and down using only the steps and platforms designated in these operating instructions, *refer to page 56*.

2.4.21 Dangers in connection with certain activities: Working on the machine

Only perform work when the machine is at standstill

If the machine is not shut down and safeguarded, parts may move unintentionally or the machine may start moving. Thus there is a risk of serious injuries or death.

▶ Before carrying out any repair, maintenance and cleaning work on the machine, shutdown and safeguard it, *refer to page 34*.

Maintenance and repair work

Improper maintenance and repair work endanger operational safety. Thus there is a risk of accidents, serious injuries or death.

▶ Only perform work which is described in this operating instructions. Prior to any work, stop and safeguard the machine, *refer to page 34*.

▶ All other maintenance and repair work must only be performed by qualified specialist workshop.

Working at or on heights of the machine

There is a risk of falling when working at or on heights of the machine. As a result, accidents may occur and people may be seriously or fatally injured.

- ▶ Prior to any work, stop and safeguard the machine, *refer to page 34*.
- ▶ Make sure you stand securely.
- ▶ Use a suitable fall protection.
- ▶ Secure the area below the assembly point against falling objects.

Raised machine and machine parts

The raised machine and machine parts may fall or tilt unintentionally. People may be seriously injured or killed, as a result.

- ▶ Do not stay under the raised machine or machine parts which are not safely supported, *refer to page 34*.
- ▶ Prior to all work on raised machines or machine parts, lower the machine or machine parts.
- ▶ Before performing any work under raised machines or machine parts, secure the machine or machine parts with rigid safety support or with hydraulic shut-off device or by supporting against lowering.

Danger associated with welding work

Improper welding work will endanger the operational safety of the machine. As a result, accidents may occur and people may be seriously or fatally injured.

- ▶ Never perform welding work on the following components:
- Engine
- Gearbox
- Components of the hydraulics
- Components of the electronics
- Frame or supporting components
- Running gear
- ▶ Before carrying out welding work on the machine, obtain consent by KRONE customer service and, if required, identify alternatives.
- ▶ Before performing welding work on headers, disconnect the header from the forage harvester. Follow the operating instructions for the header.
- ▶ Welding work must only be performed by experienced qualified personnel.
- ▶ Attach the earthing of the welding device near the welding points.
- ▶ Caution when performing welding work near electric and hydraulic parts, plastic parts and pressure accumulators. The parts may be damaged, endanger people or cause accidents.

Before performing welding work on the forage harvester:

- ▶ Switch off main battery switch.
- ▶ Pull engine control plug out of the engine block.
- ▶ Disconnect batteries.
- ▶ Connect positive and negative cables of the machine by an electrical connection.

2.4.22 Dangers in connection with certain activities: checking and charging batteries

If the battery is handled incorrectly, e.g. inadvertent connection of the battery poles to a metal object, excessive charging in conjunction with a spark, the battery may explode. People may be injured or burnt by the explosion or burnt by spraying battery acid.

- Use a suitable voltmeter to check the condition of the battery.
- Charge the battery only in well ventilated rooms with the battery compartment cover open.
- To charge the battery, follow these operating instructions, *refer to page 543*.
- Keep fire, sparks and naked flames away from the battery.
- To prevent acid from leaking, transport the battery in the installation position only.

2.4.23 Dangers in connection with certain activities: working on wheels and tyres

Improper assembly or disassembly of wheels and tyres will endanger the operational safety. As a result, accidents may occur and people may be seriously injured or killed.

The fitting of wheels and tyres requires adequate knowledge and approved mounting tools.

- If there is a lack of knowledge, have the wheels and tyres fitted by the KRONE dealer or by a qualified tyre service.
- When fitting tyres on the rims, never exceed the maximum permitted pressure specified by KRONE, otherwise the tyre or even the rim may explode, *refer to page 64*.
- When mounting the wheels, mount the wheel nuts with the specified tightening torque, *refer to page 463*.

2.4.24 Behaviour in dangerous situations and in case of accidents

Any measures not taken or incorrect measures in dangerous situations can make it difficult or impossible to rescue exposed persons. Due to the impeded conditions of rescue, the chances to help and heal injured people deteriorate.

- As a matter of principle: Park the machine.
- Get an overview of the existing danger and identify the reason.
- Secure the accident site.
- Save persons from the danger zone.
- Leave danger zone and do not enter it again.
- Alarm rescue workers and seek help, if possible.
- Carry out immediate lifesaving actions.

2.5 Safety routines

2.5.1 Shutting down and safeguarding the machine

⚠ WARNING

Risk of injury due to movement of the machine or machine parts

If the machine has not been shut down, machine or machine parts may move unintentionally. As a result, people may be seriously injured or killed.

- Before leaving the operating position: Shut down and safeguard the machine.

To shut down and safeguard the machine:

- Park the machine on a stable, horizontal and level ground.
- Switch off the drives and wait until coasting parts have come to a complete stop.
- Lower the header fully to the ground.
- Secure the self-propelled machine against rolling away by applying the parking brake.
- Switch off the engine, remove the ignition key and take it with you.
- Switch off the main battery switch, remove the actuating lever and take it with you.
- Use wheel chocks to secure the self-propelled machine against rolling away.

2.5.2 Securing raised machine and machine parts against lowering

⚠ WARNING

Crushing hazard due to movement of machine or machine parts

If the machine or machine parts are not secured against lowering, the machine or machine parts may roll, fall or sag. Thus people could be squeezed or killed.

- Lower the raised machine parts.
- Shut down and safeguard the machine, *refer to page 34*.
- Before working on or under raised machine parts: Secure machine or machine parts against lowering by means of hydraulic shut-off device (e.g. stop cock) on machine side.
- Before working on or under raised machine parts: Safely support machine or machine parts.

In order to safely support the machine or machine parts:

- To support, only use suitable and sufficiently dimensioned materials that do not break or yield.
- Bricks and hollow blocks are not suitable for safely supporting the machine and machine parts. Therefore they must not be used.
- Car jacks are also not suitable for safely supporting the machine and machine parts. They must not be used, as well.

2.5.3 Carrying out oil level check and oil and filter element changes safely

⚠ WARNING

Carrying out oil level check and oil and filter element changes safely

If oil level check and oil and filter element changes are not carried out safely, the operational safety of the machine may be impaired. This may result in accidents.

- ▶ Carry out oil level check and oil and filter element changes safely.

To carry out oil level check, oil and filter element changes safely:

- ▶ Lower raised machine parts or secure them against falling, *refer to page 34*.
- ▶ Shut down and safeguard the machine, *refer to page 34*.
- ▶ Observe the intervals for oil level check, oil and filter element changes, *refer to page 414*.
- ▶ Use only the oil grades and quantities specified in the consumables table, *refer to page 67*.
- ▶ Clean the area around the parts (for example gearbox, high-pressure filter) and make sure that no foreign objects get into the parts or the hydraulic system.
- ▶ Check existing seal rings for damage and replace them, if necessary.
- ▶ Collect leaking or waste oil in a container designated for the purpose and dispose of it properly, *refer to page 27*.

2.5.4 Running actuator test

⚠ WARNING

Run actuator test safely

When actuators are energised, functions are carried out directly and without a safety prompt. This may cause the unintentional movement of machine parts, trapping and seriously or fatally injuring persons.

- ✓ Only persons familiar with the machine are permitted to perform the actuator test.
- ✓ The person performing the test must know which machine parts are activated by controlling the actuators.
- ▶ Run the actuator test safely.

To run the actuator test safely:

- ▶ Lower raised machine parts or secure them against falling, *refer to page 34*.
- ▶ Shut down and secure the machine, *refer to page 34*.
- ▶ Cordon off the danger zone of the actuated moving machine parts in a clearly visible manner.
- ▶ Ensure that there is nobody in the danger zone of the actuated moving machine parts.
- ▶ Switch on the ignition.
- ▶ The actuator test must only be performed from a safe position outside the area that is affected by machine parts moved by the actuators.

2.6 Safety labels on the machine

Every safety label is provided with an order number and can be ordered directly from the authorised KRONE dealer. Immediately replace missing, damaged and unrecognisable safety labels.

When attaching safety labels, the contact surface on the machine must be clean and free of dirt, oil and grease to ensure optimum adhesion of the labels.

Position and meaning of safety labels

Ladder to the cabin

BX001-638

1. Order no. 27 022 558 0 (1x)

	This safety label includes the following warnings:
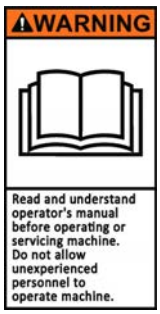	**WARNING** • Read and understand operator´s manual before operating or servicing machine. • Do not allow inexperienced personnel to operate machine.
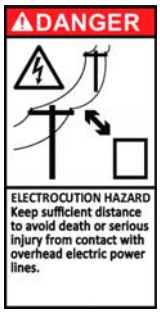	**DANGER** **ELECTROCUTION HAZARD** Keep sufficient distance to avoid serious injury or death from contact with overhead electric power lines.
	**WARNING** **FALL HAZARD** To avoid serious injury or death: - Do not ride on platform or ladder. - Do not carry passengers. - Keep riders and children off machine.
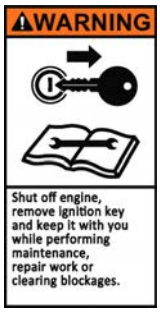	**WARNING** To avoid serious injury or death, shut off engine, remove ignition key and keep it with you while performing maintenance, repair work or clearing blockages.

	**WARNING** To avoid serious injury or death, use parking brake and wheel chocks to secure machine against inadvertent rolling. Use both wheel chocks at front axle only.
	**WARNING** Do not operate the machine unless an approved fire extinguisher is installed.
	**WARNING** Do not use hand to search for leaks. High pressure oil easily punctures skin causing serious injury and gangrene. If injured, seek emergency medical help. Relieve pressure before performing repair work.

Cabin

BX002-385

1. Order no. 27 026 397 0 (1x)

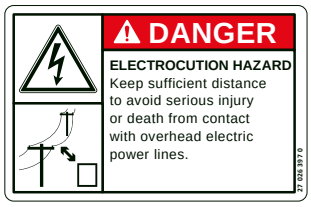	**DANGER** **ELECTROCUTION HAZARD** Keep sufficient distance to avoid serious injury or death from contact with overhead electric power lines.

Area around intake and chopping drum

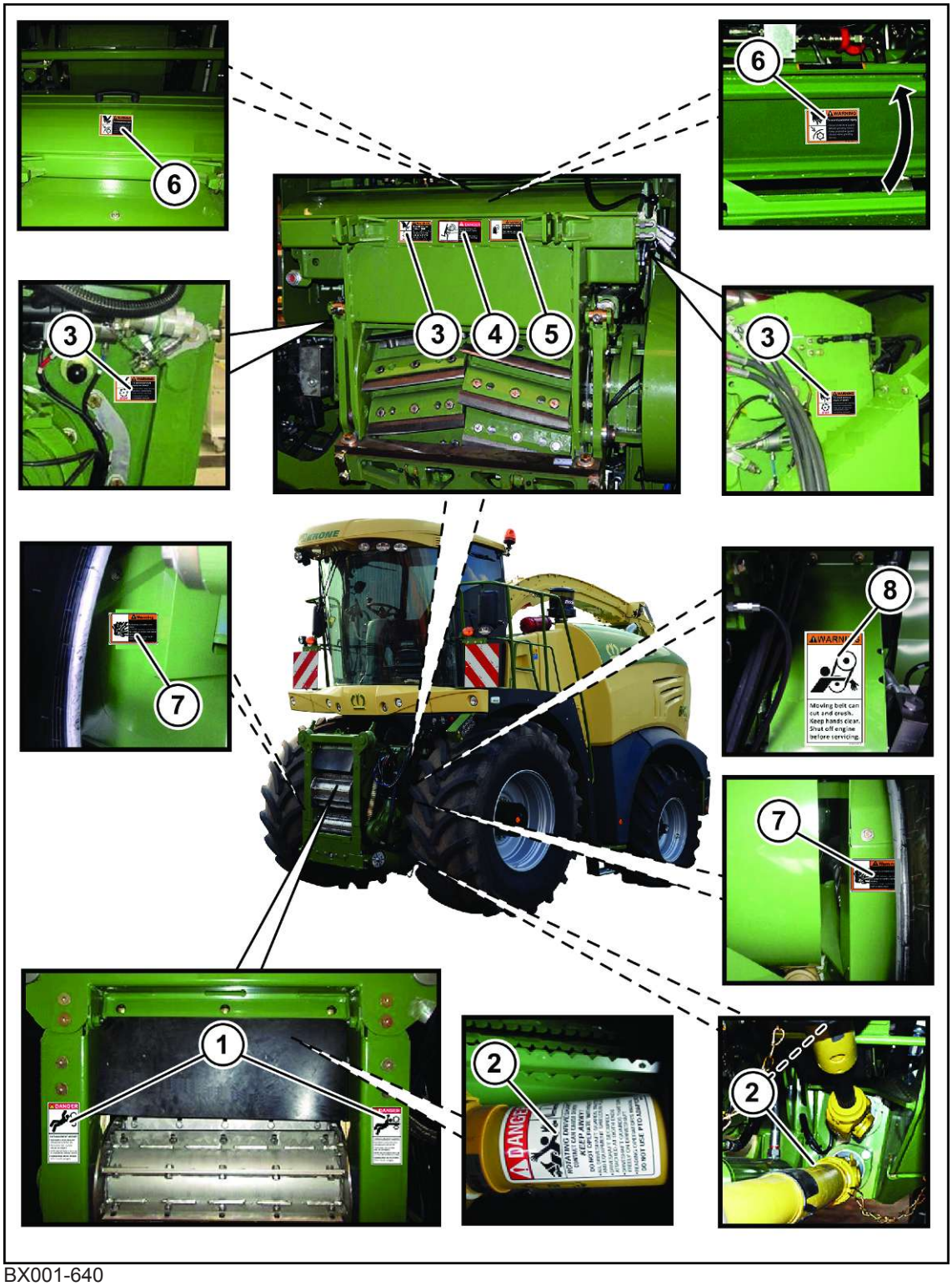

BX001-640

1. Order No. 27 018 121 0 (2x)

	**DANGER** **Avoid death or serious injury from entanglement in the feed rolls.** The harvester takes crop faster than you can release it. NEVER feed with hands or feet or use as a manually-fed stationary machine. Disengage drives and shut off engine before manually unplugging.

2. Order No. 949 228 0 (3x)

	**DANGER** **ROTATING DRIVELINE – CONTACT CAN CAUSE DEATH. KEEP AWAY!** DO NOT OPERATE WITHOUT- • All driveline guards, tractor and equipment shields in place. • Driveline securely attached at both ends. • Driveline guards that turn freely on driveline.

3. Order No. 27 014 829 0 (3x)

	**WARNING** **To Avoid serious injury or death** -Do not touch any moving machine components. -Wait until all machine components have completely stopped.

4. Order No. 27 018 120 0 (1x)

	**DANGER** Rotating cutterhead can cause serious injury or death. Never operate cutterhead without the feedroll housing.

5. Order No. 27 008 201 0 (1x)

	**WARNING** **Severe injuries to fingers and hands** Wear protective gloves to remove/install blades!

6. Order No. 27 014 826 0 (2x)

	**WARNING** **To avoid personal injury** - Close protective guard before grinding knives. - Keep protective guard closed while grinding knives..

7. Order No. 27 018 009 0 (2x)

	**WARNING** **High pressure oil can cause severe injury** Hydraulic accumulators contain oil and gas under high pressure. Relieve pressure before servicing hydraulic system. Hydraulic accumulators may be removed and repaired by a qualified workshop only.

8. Order No. 27 022 582 0 (1x)

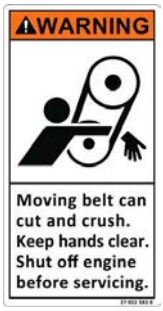	**WARNING** **Moving belt can crush.** Keep hands clear. Shut off the engine before servicing.

Left-hand machine side

BX001-641

1. Order No. 27 018 009 0 (2x)

	**WARNING** **High pressure oil can cause severe injury** Hydraulic accumulators contain oil and gas under high pressure. Relieve pressure before servicing hydraulic system. Hydraulic accumulators may be removed and repaired by a qualified workshop only.

2. Order No. 27 014 825 0 (2x)

	**WARNING** **Hot surfaces** -Keep sufficient distance from hot surfaces. -Allow to cool before servicing.

3. Order No. 942 546 0 (1x)

	**WARNING** **Avoid bodily injuries from rotating engine fan.** Keep hands out of fan discharge area when engine is running.

4. Order No. 942 552 0 (1x)

	**CAUTION** **Avoid bodily injury.** Before searching for metal: 1. Disengage all drives. 2. Shut off engine. Remove key. 3. Wait until all parts stop moving.

5. Order No. 942 551 0 (1x)

	**CAUTION** **1.** Keep all shields in place. 2. Disengage and shut off all engine and/or motor power before servicing or unclogging machine. 3. Keep hands, feet and clothing away from power-driven parts.

Right-hand machine side

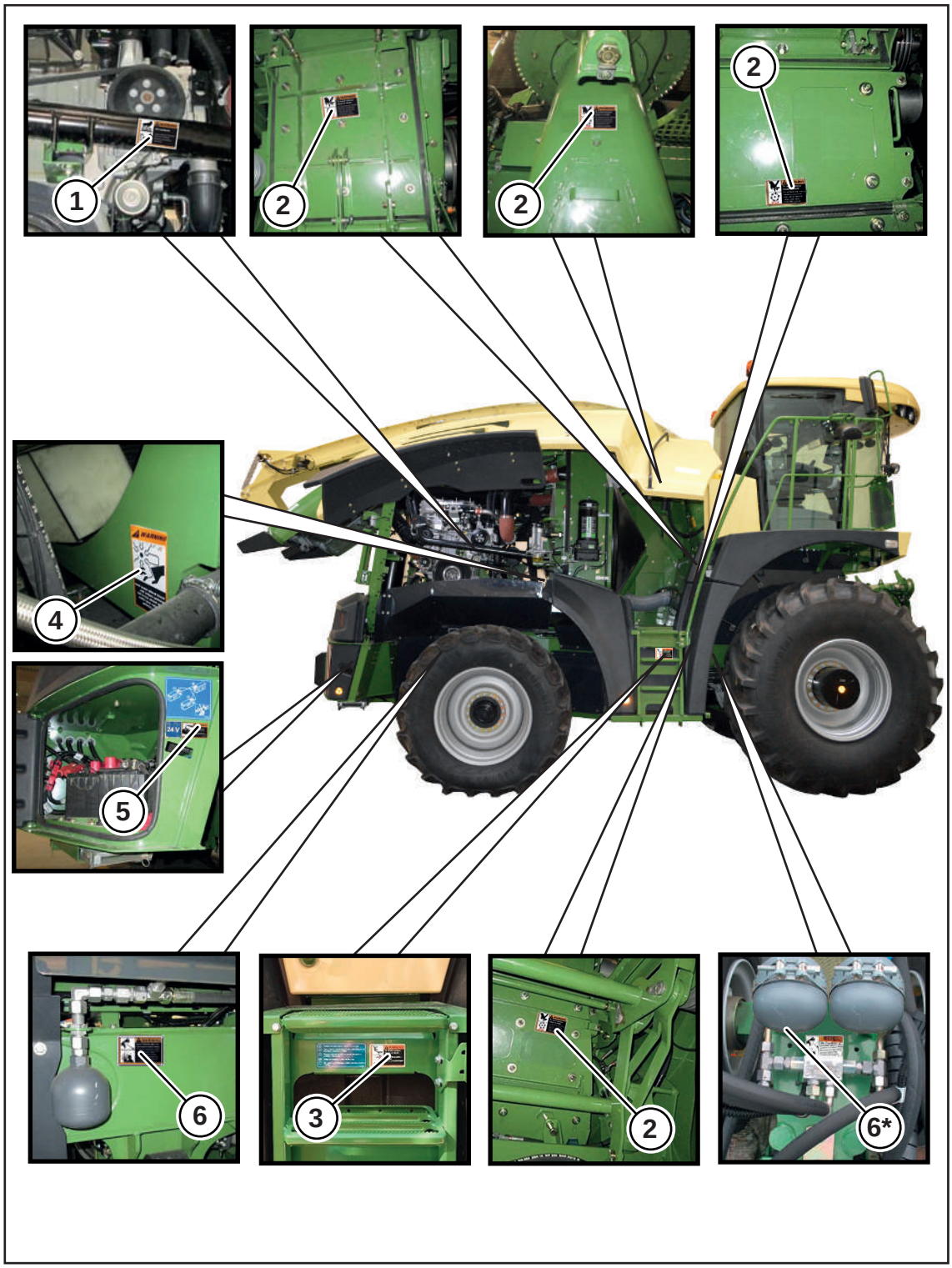

BX001-642

1. Order No. 27 014 825 0 (1x)

	**WARNING** **Hot surfaces** -Keep sufficient distance from hot surfaces. -Allow to cool before servicing.

2. Order No. 27 014 829 0 (4x)

	**WARNING** **To Avoid serious injury or death** -Do not touch any moving machine components. -Wait until all machine components have completely stopped.

3. Order no. 27 014 824 0 (1x)

	**WARNING** **To Avoid serious injury or death** - Do not ride on platform or ladder. - Do not carry passengers.

4. Order No. 942 546 0 (1x)

	**WARNING** **Avoid bodily injuries from rotating engine fan.** Keep hands out of fan discharge area when engine is running.

5. Order No. 942 538 0 (1x)

	**WARNING** Avoid severe injury to eyes and skin from sulfuric acid. Wear face mask, gloves and goggles when servicing battery.

6. Order no. 27 018 009 0 (1x, *also 1x for “additional axle” version)

	**WARNING** **High pressure oil can cause severe injury** Hydraulic accumulators contain oil and gas under high pressure. Relieve pressure before servicing hydraulic system. Hydraulic accumulators may be removed and repaired by a qualified workshop only.

Rear area

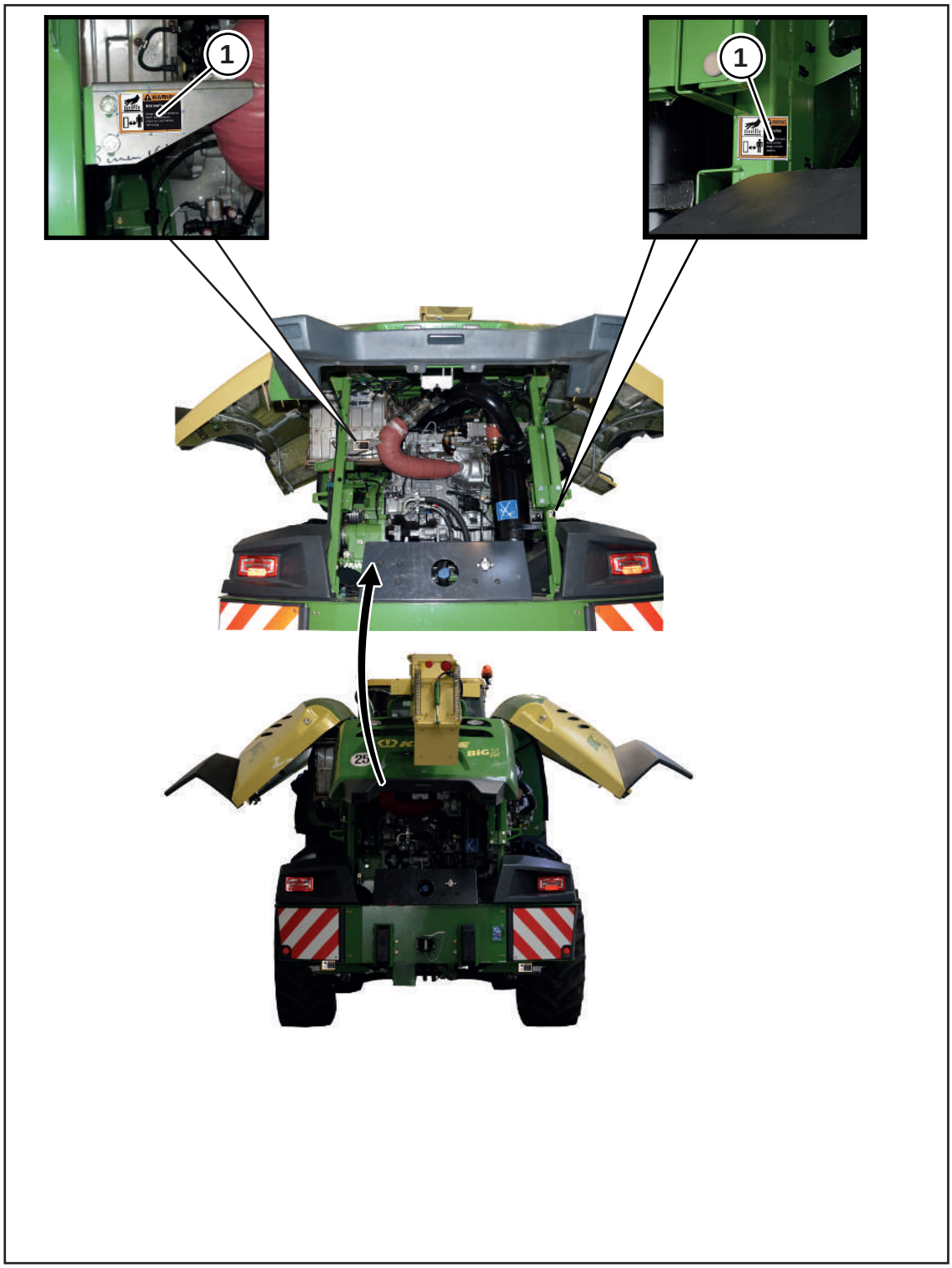

BX001-643

1. Order No. 27 014 825 0 (2x)

	**WARNING** **Hot surfaces** -Keep sufficient distance from hot surfaces. -Allow to cool before servicing.

On top of the machine

BX001-645

1. Order No. 27 018 009 0 (1x)

	**WARNING** **High pressure oil can cause severe injury** Hydraulic accumulators contain oil and gas under high pressure. Relieve pressure before servicing hydraulic system. Hydraulic accumulators may be removed and repaired by a qualified workshop only.

For version with “Hydraulics auxiliary tank”:

2. Order No. 27 014 825 0 (1x)

	**WARNING** **Hot surfaces** -Keep sufficient distance from hot surfaces. -Allow to cool before servicing.

2.7 Safety equipment

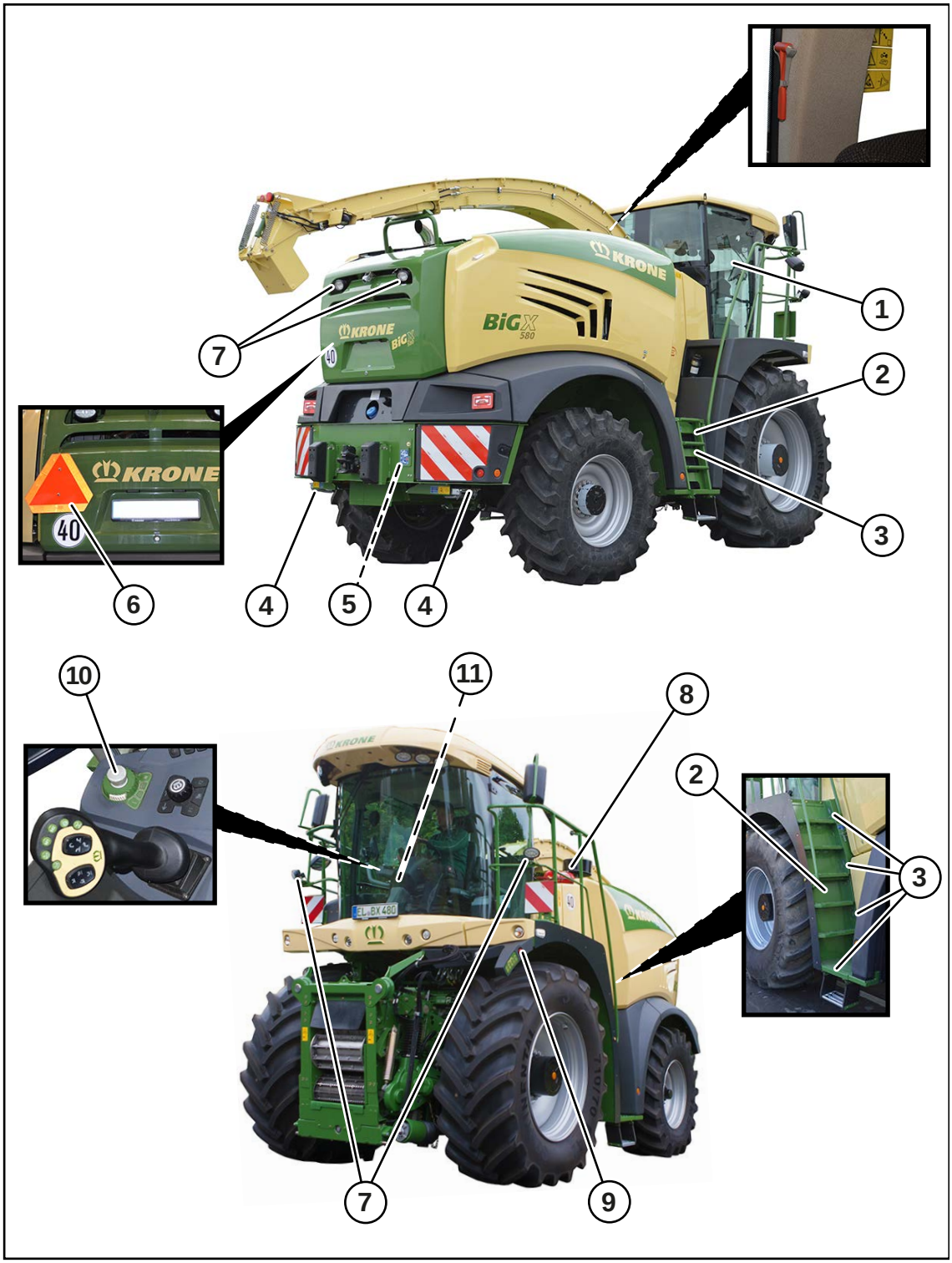

BXG000-106

Pos.	Designation	Explanation
1	Emergency exit	In case of an emergency, the side window on the right-hand side in the direction of travel, next to the driver's seat, can be broken in with an emergency hammer, *refer to page 78*.
2	Ladder	▶ To enter the cabin safely at all timed, climb up onto the machine using the left-hand side ladder only. Use the handrails while doing so.
3	Ladder lighting	**"Maintenance and ladder lighting" version** To enable the rungs on the ladder to be easily seen, even in the dark, the rungs can be illuminated, *refer to page 93*.
4	Wheel chocks	Wheel chocks can be used to secure the machine from rolling away. The machine features 2 wheel chocks which are located under the rear bumper, *refer to page 354*.
5	Main battery switch	The main battery switch is used to switch on or interrupt the machine’s power supply, *refer to page 355*.
6	SMV emblem	The SMV emblem (Slow-Moving Vehicle) can be mounted on slow-moving machines or vehicles, *refer to page 58*.
7	Working lights	To ensure that the machine can be safely exited in the dark, some working lights are switched off after a delay, *refer to page 93*.
8	Fire extinguisher	The fire extinguisher is located in the direction of travel at top left of the machine and can be reached via the ladder to the cabin and the platform, *refer to page 58*.
9	Quick-stop switch grinding control unit	The quick-stop switch on the grinding control unit is used to stop the working functions of the machine in an emergency. The diesel engine and the traction drive continue running, *refer to page 115*.
10	Quick-stop switch	The quick-stop switch in the armrest is used to stop the machine's working functions in an emergency. The traction drive remains active, *refer to page 102*.
11	Seat switch in driver's seat	The seat switch integrated in the driver's seat is used to check whether the driver's seat is occupied. If the driver's seat is not occupied for longer than 7 seconds, the intake and the header are switched off. When the driver's seat is not occupied, the intake and the header cannot be switched on. When the driver's seat is occupied again, the intake and the header can be switched on.

2.7.1 SMV emblem

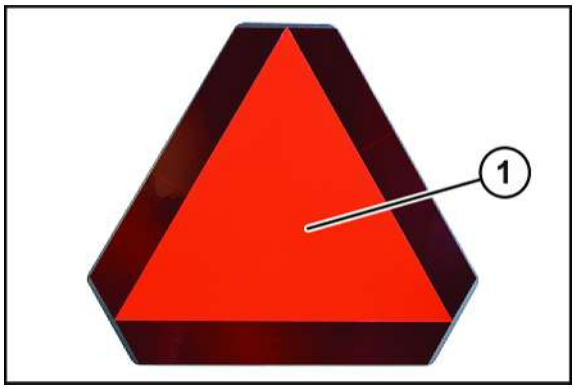

KM000-567

The SMV emblem (Slow-Moving Vehicle) (1) is attached to slow-moving machines or vehicles travelling on public highways at a speed of less than 40 km/h (25 mph).

The SMV emblem (1) is at the rear in the centre or at the rear on left.

When driving the machine on public highways, the SMV emblem must be mounted.

If the machine is transported on transport vehicles (for example lorry or train), the SMV emblem must be covered or dismounted.

2.7.2 Fire extinguisher

BXG000-004

INFORMATION

The machine must not be operated without a fire extinguisher which contains at least 20 lbs of extinguishing agent.

The manufacturer recommends a powder fire extinguisher for fire classes A, B and C.

The support (1) for fire extinguisher is located in direction of travel left on top of the machine and can be reached via ladder and platform.

Have the fire extinguisher registered. So you can be sure that maintenance is carried out regularly and in good time (according to EN 3 at the latest every two years) and can be proven.

- Prior to starting up the machine, check that the fire extinguisher is attached and ready for use, *refer to page 466*.
- Consider the operating instructions of the fire extinguisher and the web page of the manufacturer of the fire extinguisher.
- Check fire extinguisher for external damage. In the event of anomalies, inform responsible maintenance company.

The inspection intervals in other countries may be different. In such a case, the prescribed inspection intervals of the country of operation apply.

- Observe the provisions of the corresponding countries.

3 Data memory

A variety of electronic components of the machine contains data memories which save temporarily and permanently technical information on machine condition, events and errors. This technical information generally documents the condition of a part, module, system or of the environment:

- Operating states of system components (e.g. filling levels)
- Status messages of the machine and its single components (e.g. number of revolutions of wheel, wheel speed, motion delay, lateral acceleration)
- Malfunctions and defects in important system components (e.g. light and brakes)
- Reactions of machine in special driving situations (e.g. actuation of airbag, installing stability control systems)
- Ambient conditions (e.g. temperature)

These data are exclusively of a technical nature. They are used to detect and remedy errors as well as to optimize machine functions. There is no possibility to create motion profiles on driven routes from these data.

If services are used (e.g. repair services, service processes, warranty cases, quality assurance), this technical information can be read out by employees of service network (including manufacturer) from the event and error data memories by means of special diagnostic units. There you receive further information, if necessary. After the error has been remedied, the information in the error storage is either deleted or continuously overwritten.

When using the machine, situations are possible in which these technical data in connection with other information (accident protocol, damage to the machine, testimonies etc.) could become transferable to people - if applicable in consultation with an expert.

Additional functions regulated by a contractual agreement with the customer (e.g. remote maintenance) permit the transmission of certain machine data from the machine.

4 Machine Description

4.1 Machine overview

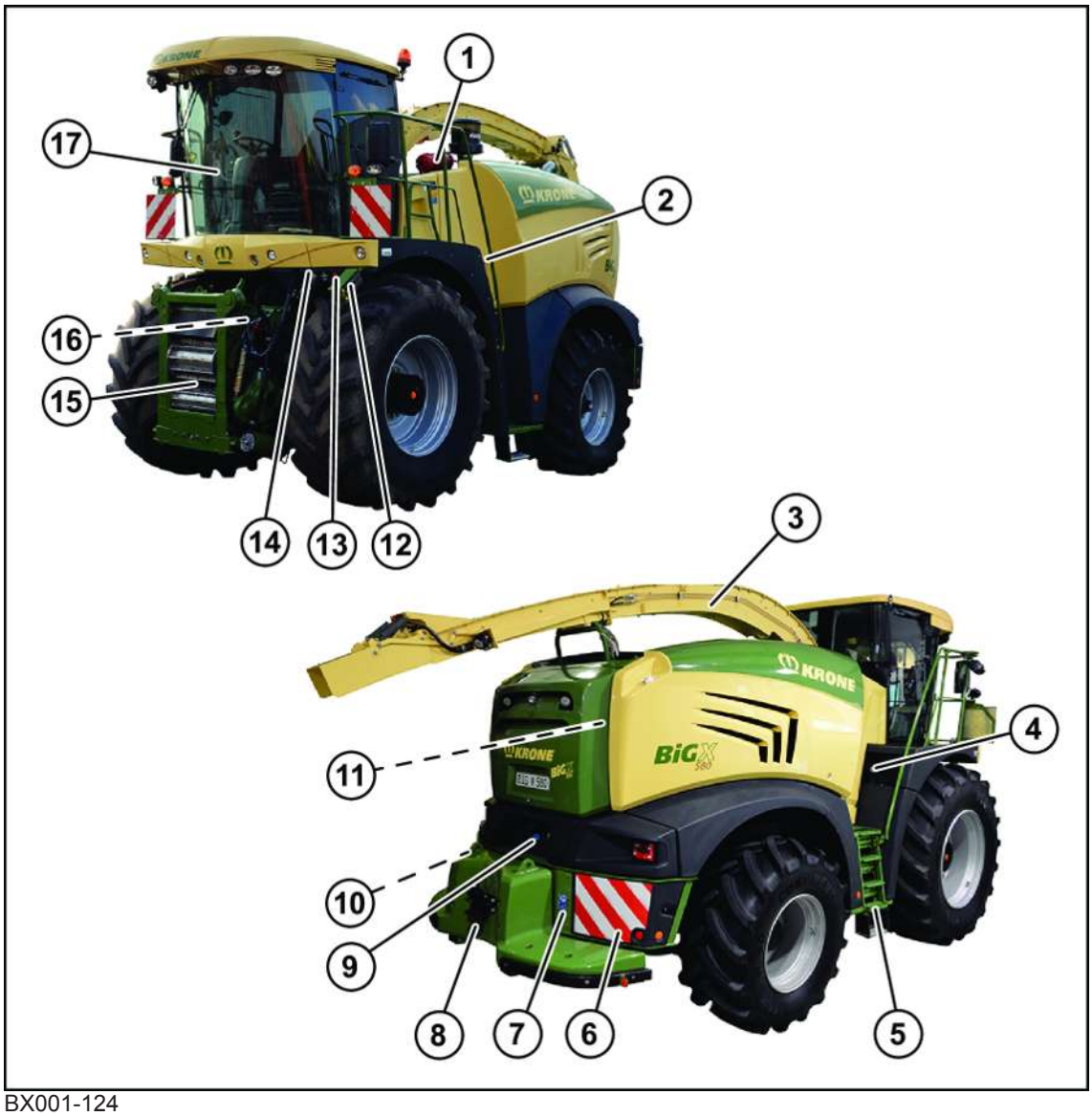

BX001-124

1	Fire extinguisher	10	Storage compartment
2	Ladder	11	Engine
3	Spout	12	Grinding control unit
4	Filler neck fuel tank	13	Quick-stop switch grinding control unit
5	Ladder right	14	Connections for header
6	Battery compartment	15	Intake unit
7	Main battery switch	16	Grinding unit
8	Tow coupling (for "Automatic tow coupling" version)	17	Cabin
9	Filler neck urea tank		

Overview of crop flow

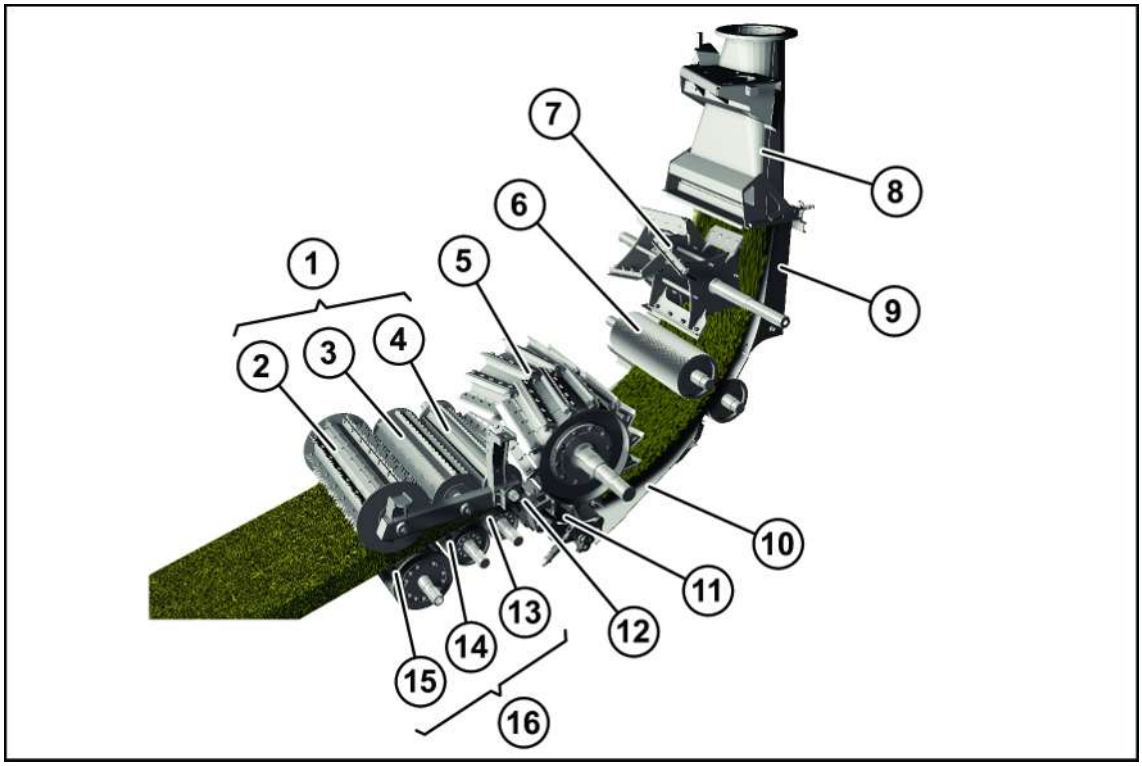

BX001-125

1	Intake roller assembly top	9	Rear wall discharge accelerator
2	Pre-compression roller	10	Transfer shaft
3	Intermediate roller	11	Drum base
4	Compression roller	12	Counterblade
5	Chopping drum	13	Flat roller
6	Corn conditioner	14	Intermediate roller
7	Discharge accelerator	15	Feed roller
8	Channel support	16	Intake roller assembly bottom

4.2 Labelling

INFORMATION

The entire identification plate represents a legal document and should not be altered or rendered illegible!

BXG000-008

The machine data can be found on type plate (1). The type plate is located on right-hand machine side on vehicle frame below the cabin.

Information for enquiries and orders

If you have any further queries on the machine or if you want to order spare parts, always enter type designation, vehicle identification number and year of manufacture of the corresponding machine. To ensure that these data are always available, we recommend to enter them in the fields on the front cover page of these operating instructions.

4.3 Function description chopping crops

Grass mode with grass header

To use the machine in grass mode, it must be fitted with a suitable grass header, approved by the manufacturer. The crops must lay cut in a swath.

The grass header picks up the crop from the field and conveys it in front of the intake in the middle of the machine.

The intake draws in the crops with its rollers, compresses them and transports them to the foraging unit.

The foraging unit chops up the crops with the blades on its rotating chopping drum and conveys them through the grass channel to the discharge accelerator.

The discharge accelerator accelerates the crops to such an extent that they are conveyed at high speed through the spout and out of the machine, e.g. into a trailer pulled next to the machine.

Maize mode with maize header

To use maize mode, the machine must be fitted with a maize header, approved by the manufacturer.

The maize header uses its cutting unit to cut the crops and conveys them in front of the intake of the forage harvester in the middle of the vehicle.

The intake draws in the crops with its rollers, compresses them and transports them to the foraging unit.

The foraging unit chops up the crops with the blades on its rotating chopping drum and conveys them to the corn conditioner.

The corn conditioner strikes the grains in the crops using two profiled rollers and conveys the crops into the discharge accelerator.

The discharge accelerator accelerates the crops to such an extent that they are conveyed at high speed through the spout and out of the forage harvester, e.g. into a trailer pulled next to the machine.

5 Technical Data

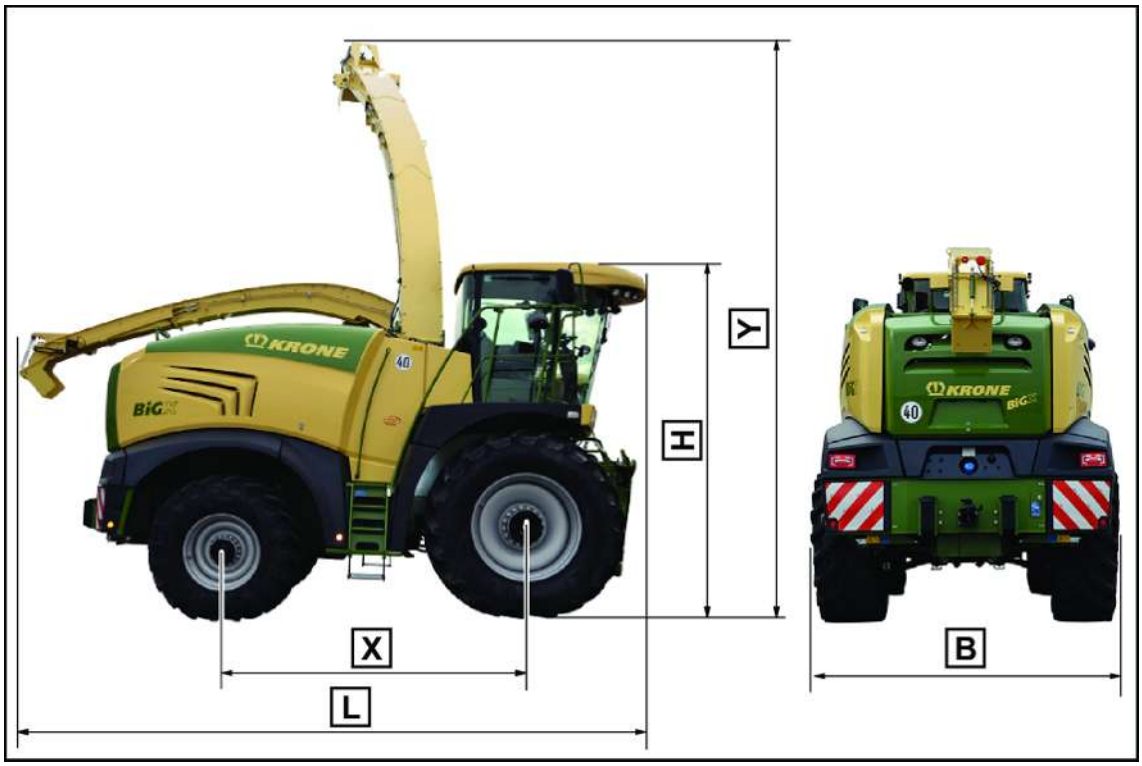

BXG000-040

Dimensions in transport position	
Total length L[1]	7,250-8,250 mm
Total width B (tyre width 600 at front wheels)	3,000 mm
Total width B (tyre width 710 at front wheels)	3,110 mm
Total width B (tyre width 800 at front wheels)	3,200 mm
Total width B (tyre width 900 at front wheels)	3,300 mm
Total height H[2]	3,915-3,980 mm
Centre distance X	3,100 mm

[1] Depending on the version, the header used and the use of a spout extension.

[2] Depending on the tyres fitted.

Dimensions in working position	
Maximum working height Y[1]	6,390-7,065 mm

[1] Depending on the tyres fitted and the use of a spout extension.

Engine data	
Manufacturer	MTU
Engine type	6RS1300 C50
Design	6 cylinders in series
Emissions level	IV (EU)
Displaced volume	12.8 L
Continuous engine performance	360 kW (490 HP)
Continuous chopping output X-Power	338 kW (460 HP)

Engine data	
Cooling system	Liquid cooling
Diesel injection process	Common Rail injection
Starter voltage	24 V
Starter power	7.0 kW
Alternator voltage	24 V
Alternator current intensity	150 A

Traction drive	
Type	Hydrostatic traction drive with axial piston adjusting motors in wheel hub gearboxes
Forward speed in work mode	0-25 km/h
Forward speed in transport mode	0-40 km/h
Four-wheel	Option
Traction control system	Series

Axles	
Steering	Rear axle
Lock angle rear axle	50°
Suspension rear axle	hydraulic

Hitch (HSM - M9617)	
permitted D-value	82 kN
permitted drawbar load at the coupling point	max. 2,000 kg[1, 2]
max. trailer load (overrun brake)	8000 kg
max. trailer load (with existing compressed air brake system in conjunction with a trailer braked by compressed air)	10000 kg
Permitted drawbar eyes	DIN11026, 11043, 74054

[1] Observe maximum permitted rear axle load!

[2] When installing an additive tank at the rear of the machine, observe the maximum permitted drawbar load and the maximum permitted rear axle load!

Electrical system	
Alternator voltage	24 V
Alternator current intensity	150 A
Number of batteries	2
Battery voltage	24 V (2x12 V)
Battery capacity	(2x) 135 Ah

Air conditioning	
Evaporator	Refrigerating capacity[-1] 5,200 W
Heater	Heating capacity 4,000 W
Fan	910 m³/h free blowing
Voltage	24 V
Power consumption	8.6 A

[1] measured at +30 °C ambient temperature (manufacturer's data).

Vibration values

The determined values are below the values required according to the EU Vibration Directive 2002/44/EC.

- The vibration values for hand-arm vibrations are below 2.5 m/s².
- Concerning whole body vibrations the action value of 0.5 m/s² is not exceeded.

Airborne noise emission	
Emissions value (sound pressure level)	74.9 dB(A)[1]
Measurement device	Bruel & Kjaer, Type 2236
Accuracy class	2
Measurement uncertainty (according to DIN EN ISO 11201)	4 dB

[1)] Value measured with forage harvester BiG X 630 in combination with header EasyCollect 750-2

Ambient temperature	
Temperature range for machine operation	-5 to +45 °C

Maximum permitted speed[1]	
Technically permitted maximum speed	40 km/h

[1)] The maximum permitted speed may be restricted by legal requirements in the country of use.

Machine components

Intake	
Number of rollers/number of metal detector coils	6/6
Distance between metal detector and counterblade	820 mm

Chopper unit	
Drum width/drum diameter	630 mm/660 mm
Number of blades 20	Chopping length range 5-31 mm
Number of blades 28	Chopping length range 4-22 mm
Number of blades 36	Chopping length range 3-17 mm
Number of blades 40	Chopping length range 2.5-15 mm
For version with "VariLOC cutting length gearbox"	

Chopper unit	
Number of blades 28 in gearbox position I (transmission ratio 1:1)	Chopping length range 4-22 mm
Number of blades 28 in gearbox position II (transmission ratio 1:1.5)	Chopping length range 10-30 mm
Number of blades 36 in gearbox position I (transmission ratio 1:1)	Chopping length range 3-17 mm
Number of blades 36 in gearbox position II (transmission ratio 1:1.5)	Chopping length range 10-24 mm

Corn conditioner	
Speed difference	20 % (standard), 30 % (optional)
Roller diameter	250 mm
Roller width	455 mm
Roller distance	0.5-10 mm

Spout	
Angle of rotation	210°
Overload height	6000 mm

5.1 Consumables

Biodegradable consumables can be used on request.

NOTICE

Machine damage due to mixing of oil

If oils, which have different specifications, are mixed with each other, the machine may be damaged.

- Never mix oils, which have different specifications, with each other.
- Contact your KRONE service partner before using an oil with a different specification after changing the oil.

5.1.1 Oils

Designation	Filling quantity	Specification	Initial filling ex works
Engine oil (diesel engine)	40 l	see supplied operating and maintenance manual from MTU	Shell HD 1297 SW-30
Hydraulic oil tank	85 l	Hydraulic oil HLP 46	SRS Wiolan HS 46
Entire hydraulic system	120 l	Hydraulic oil HLP 46	SRS Wiolan HS 46

Designation	Filling quantity	Specification	Initial filling ex works
Power take-off gear	3.4 L	Gear oil Renolin Unisyn CLP220 or: Gear oil Mobile SHC 630	Gear oil Renolin Unisyn CLP220
Transfer gearbox	4.3 l	Gear oil Renolin Unisyn CLP220 or: Gear oil Mobile SHC 630	Gear oil Renolin Unisyn CLP220
Intermediate gearbox	5.1 l	Gear oil Renolin Unisyn CLP220 or: Gear oil Mobile SHC 630	Gear oil Renolin Unisyn CLP220
Intermediate gearbox intake	0.5 l	Gear oil API-GL4-SAE90	Gear oil API-GL4-SAE90
Lower roller gearbox	3.0 l	Gear oil API-GL4-SAE90	Gear oil API-GL4-SAE90
Upper roller gearbox	1.5 l	Gear oil API-GL4-SAE90	Gear oil API-GL4-SAE90
Fan gearbox	2.8 L	Gear oil Renolin Unisyn CLP220 or: Gear oil Mobile SHC 630	Gear oil Renolin Unisyn CLP220
Rotary drive gearbox spout	1.5 l	Gear oil Mobil Glygoyle 460	Gear oil Mobil Glygoyle 460
Wheel hub gearbox at front	3.5 L	Gear oil Shell Spirax S4 CX 50	Gear oil Shell Spirax S4 CX 50
Wheel hub gearbox at rear	1.5 l	Gear oil Shell Spirax S4 CX 50	Gear oil Shell Spirax S4 CX 50
VariLOC chop length gearbox	3.3 l	Gear oil Renolin Unisyn CLP220 or: Gear oil Mobile SHC 630	Gear oil Renolin Unisyn CLP220

The filling quantities of the gearboxes are guide values. The correct values result from oil change/oil level check, *refer to page 529*.

List of mineral oils of quality class HLP (HM) and environmentally friendly, rapidly biodegradable HEPG pressure fluids allowed to be used for hydraulic oil tank:

ISO viscosity class	HEPG VG 46	HLP VG 46
Manufacturer		
ADDINOL		Hydraulic oil HLP 46
AGIP		OSO 46
ARAL	BAF 46Vitam	Aral Vitam GF 46
ASEOL	Aqua VG 46	

ISO viscosity class Manufacturer	HEPG VG 46	HLP VG 46
AVIA	Avia Hydrosynth 46	AVILUB RSL 46 Avia Fluid ZAD 46
BECHEM	Hydrostar UWF 46	
BP	Biohyd PEG 46	Energol HLP 46
CASTROL		HYSPIN AWS 46
COFRAN		Cofraline extra 46 S
DEA	Econa PG 46	Astron HLP 46
ELF		ELFOLNA 46 ELFOLNA DS 46
ENGEN		Engen TQH 20/46
ESSO	Hydraulic oil PGK 46	NUTO H 46
FINA	Hydraulic oil D3031.46	HYDRAN 46
FRAGOL	Hydraulic TR 46	
FUCHS	Renolin PGE 46	RENOLIN MR 15, VG 46, B15 VG 46
Houghton	Syntolubric 46	
KLÜBER		LAMORA HLP 46
KUWAIT		Q8 Haydn 46, Q8 Holst 46, hydraulics S46
LIQUI MOLY		HLP 46 ISO
Mobil		Mobil DTE 25 Mobil Hydraulic Oil Medium
SHELL	Fluid BD 46	Shell Tellus oil 46 Shell Hydrol DO 46
SRS		WIOLAN HS 46 WIOLAN HX 4
Stuart Theunissen	Hydrocor E46 ISOCOR E46	Cofraline extra 46 S
TOTAL		Azolla ZS 46
TRIBOL		Tribol 772 Tribol ET 1140-46 Tribol 943 AW 46
VALVOLINE	Ultrasyn PG 46	
VERKOL		Vesta HLP 46

5.1.2 Lubricating grease

Designation	Filling quantity	Specification
Central lubrication system	5.0 L	Lubricating grease according to DIN 51818 NLGI class 2, lithium soap with EP additives
Manual lubrication points	As required [1)]	

[1] Lubricate the manual lubrication point until grease escapes at the bearing position. After lubricating, remove the grease escaping from the bearing position.

5.1.3 Coolant

Consumables/initial filling ex works

Designation	Filling quantity	Specification	Initial filling ex works
Engine coolant tank	60 l	refer to provided operating and maintenance manual of MTU company	BASF Glysantin G40

5.1.4 Refrigerant (air conditioning)

Designation	Filling quantity	Specification
Refrigerant	1,500 g	R134a
Oil	215 cm³	PAG

Data sheet for refrigerant R134a (excerpt)

Refrigerant R 134a	
Chemical designation	1,1,1,2 tetrafluoroethane
Chemical formula	$CH_2F\ CF_3$
Molecular weight:	102.0 g/mol
Boiling point (at 1.013 bar):	-26.1 °C
Freezing point:	-101.0 °C
Critical temperature:	-101.1 °C
Critical pressure:	40.60 bar
Density (liquid at +25 °C)	1206 kg/m³
Limits of flammability in the air:	not inflammable

Environmental data FKW 134a	
ODP – Ozone depletion potential	ODP=0
CLP – Chlorine load potential	CLP=0
PCR – Photochemical reactivity	PCR=0.5
GWP – Greenhouse effect	1,430
CO_2 equivalent	2,145 kg

5.1.5 Fuel/urea

Designation	Filling quantity	Specification
Fuel tank	1215 l	refer to provided operating and maintenance manual of MTU company
Fuel additional tank (optional)	220 l	

Designation	Filling quantity	Specification
Urea tank	115 l	refer to provided operating and maintenance manual of MTU company

5.2 Tyres

Tyres	Equipment	Tyre dimensions
Front axle	Default[1]	680/85R32
	Option[1]	710/70R42
	Option[1]	800/65R32 (N)
	Option[1]	800/70R38
	Option[1]	900/60R32
	Option[1]	900/60R42
Rear axle	Default[1]	540/65R30
	Option[1]	620/70R30 (N)
	Option[1]	710/60R30
Additional axle	Option	180/70R8

[1] Restricted use depending on harvesting work

Before working on a slope, increase the tyre pressure in the front wheels by 0.5 bar more than indicated in the following table. After working on the slope, the tyre pressure must be set to the values in the table.

Before storing the machine at the end of the harvesting season, set the tyre pressure to the maximum permitted value. Before starting the new harvesting season, the tyre pressure must be set to the values in the table suitable for the header. The value for the maximum permitted tyre pressure is indicated on the tyre wall.

Tyre pressure									
Tyre type	[km/h]	EasyFlow or Solo machine	EasyCollect			EasyCollect/XCollect			Axle
			450-2	600-2	750-2	600-3	750-3	900-3	
		[bar]	[bar]	[bar]	[bar]	[bar]	[bar]	[bar]	
680/85 R32	40	1.8	1.8	2.0	2.4	2.4	2.4	2.4	Front axle
	10	1.2	1.2	1.2	1.4	1.4	1.4	1.4	
710/70 R42	40	1.4	1.4	1.6	1.8	1.8	1.8	1.8	
	10	1.0	1.0	1.0	1.0	1.0	1.1	1.1	
800/65 R32 (N)	40	1.8	1.8	2.2	2.4	2.4	2.6	2.6	
	10	1.1	1.1	1.2	1.2	1.2	1.4	1.4	
800/70 R38	40	1.1	1.1	1.2	1.4	1.4	1.4	1.4	
	10	1.0	1.0	1.0	1.0	1.0	1.0	1.0	
900/60 R32	40	1.2	1.6	1.6	1.8	1.6	1.8	1.8	
	10	0.8	0.8	1.0	1.1	1.0	1.2	1.2	
900/60 R42	40	1.1	1.1	1.2	1.3	1.3	1.4	1.4	
	10	1.0	1.0	1.0	1.0	1.0	1.0	1.0	

Tyre pressure									
Tyre type	[km/h]	EasyFlow or Solo machine	EasyCollect			EasyCollect/XCollect			Axle
			450-2	600-2	750-2	600-3	750-3	900-3	
		[bar]	[bar]	[bar]	[bar]	[bar]	[bar]	[bar]	
540/65 R30	40	1.6	1.8	2.0	2.2	2.2	2.2	2.2	Rear axle
	10	1.6	1.8	2.0	2.2	2.2	2.2	2.2	
620/70 R30 (N)	40	1.5	1.8	1.8	2.0	2.0	2.0	2.0	
	10	1.0	1.0	1.1	1.2	1.2	1.2	1.2	
710/60 R30	40	1.5	1.8	2.0	2.2	2.2	2.2	2.2	
	10	1.0	1.2	1.2	1.4	1.4	1.4	1.4	
180/70 R8	40	10	10	10	10	10	10	10	Additional axle
	10	10	10	10	10	10	10	10	

5.3 Total weights and axle loads

Depending on machine type, used additional axle and used header, the following results from the front axle load:

- the rear axle load
- the total weight
- the required counter weight behind the rear axle (with base weight, intermediate plates and end plate)

INFORMATION

The permitted front axle load can be found in the TÜV report of the machine.

INFORMATION

If a combination of forage harvester and attached maize header is deployed for on-road use, this combination must be entered in the vehicle papers of the forage harvester. If the maize header has not yet been entered in the vehicle documents, the details in the vehicle papers must be supplemented accordingly.

▶ Ask for the required sample report from your sales partner for this purpose.

INFORMATION

If a forage harvester with a maize header is used, the forage harvester must be additionally weighed down by a rear weight. The number of intermediate plates for the rear weight depends on the machine type, the permitted front axle load and the type of maize header.

If there are no suitable values for the number of intermediate plates in the technical data of these operating instructions for the combination of forage harvester and maize header, this information can be found in the sample report for the combination of forage harvester and maize header.

Precision forage harvester with 2 axles

Ballasting on a front axle load of 11,500 kg

	Without header/ With EasyFlow	With EasyCollect	
		450-2	600-2
Permitted axle load at rear [kg]	8250	9000	9400
Permitted total weight [kg]	18000	20000	20900
Basic weight [quantity]	-	1	1
Intermediate plate [quantity]	-	-	5
End plate [quantity]	-	1	1

Series version in the vehicle documents.

Ballasting on a front axle load of 12,000 kg

	Without header/ With EasyFlow	With EasyCollect			With XCollect
		600-2	750-2	600-3	600-3
Permitted axle load at rear [kg]	Refer to table "Ballasting on a front axle load of 11,500 kg"	9000	9000	9000	9500
Permitted total weight [kg]		21000	21000	21000	21500
Basic weight [quantity]		1	1	1	1
Intermediate plate [quantity]		-	5	4	8
End plate [quantity]		1	1	1	1

For this setup condition, the vehicle documents must be changed.

Ballasting on a front axle load of 12,300 kg

	Without header/ With EasyFlow	With XCollect
		600-3
Permitted axle load at rear [kg]	Refer to table "Ballasting on a front axle load of 11,500 kg"	8700
Permitted total weight [kg]		21000
Basic weight [quantity]		1
Intermediate plate [quantity]		3
End plate [quantity]		1

For this setup condition, the vehicle documents must be changed.

Ballasting on a front axle load of 12,600 kg

	Without header/ With EasyFlow	With EasyCollect			With XCollect
		750-2	600-3	750-3	750-3
Permitted axle load at rear [kg]	Refer to table "Ballasting on a front axle load of 11,500 kg"	8250	9000	9000	9300
Permitted total weight [kg]		20900	21000	21500	21900
Basic weight [quantity]		1	1	1	1

	Without header/ With EasyFlow	With EasyCollect			With XCollect
		750-2	600-3	750-3	750-3
Intermediate plate [quantity]	Refer to table "Ballasting on a front axle load of 11,500 kg"	-	-	5	9
End plate [quantity]		1	1	1	1

For this setup condition, the vehicle documents must be changed.

Ballasting on a front axle load of 13,000 kg

	Without header/ With EasyFlow	With EasyCollect	With XCollect
		750-3	750-3
Permitted axle load at rear [kg]	Refer to table "Ballasting on a front axle load of 11,500 kg"	8250	8300
Permitted total weight [kg]		21000	21300
Basic weight [quantity]		1	1
Intermediate plate [quantity]		-	3
End plate [quantity]		1	1

For this setup condition, the vehicle documents must be changed.

Precision forage harvester with 3 axles

Ballasting on a front axle load of 11,500 kg

	With EasyCollect				
	450-2	600-2	750-2	600-3	750-3
Permitted axle load at rear [kg]	8250	8250	8250	8250	8250
Permitted axle load additional axle [kg]	2300	2300	2300	2300	2300
Permitted total weight [kg]	21000	21000	22000	21000	22000
Basic weight [quantity]	1	1	1	1	1
Intermediate plate [quantity]	-	-	-	2	5
End plate [quantity]	1	1	1	1	1

Series version in the vehicle documents.

	With XCollect	
	600-3	750-3
Permitted axle load at rear [kg]	8250	8250
Permitted axle load additional axle [kg]	2300	2300
Permitted total weight [kg]	22000	22000

	With XCollect	
	600-3	750-3
Basic weight [quantity]	1	1
Intermediate plate [quantity]	-	4
End plate [quantity]	1	1

Series version in the vehicle documents.

Weight to ballast the rear axle

	Weight
Basic weight[1]	1,260 kg
Intermediate plate[1]	106 kg
End plate[1]	136 kg

[1] For the quantity required, please refer to the tables.

5.4 Released headers

Header type	Version
Maize header	EasyCollect 450-2
	EasyCollect 600-2
	EasyCollect 750-2
	EasyCollect 600-3
	EasyCollect 750-3
	XCollect 600-3 (BV301-10)
	XCollect 750-3 (BV301-20)
Grass header	EasyFlow 300 S
	EasyFlow 380 S (use is not authorised in all countries)
Direct cut header	XDisc 620

A transport trailer can be connected to some of the headers.

6 Control and Display Elements

6.1 Overview of operating elements

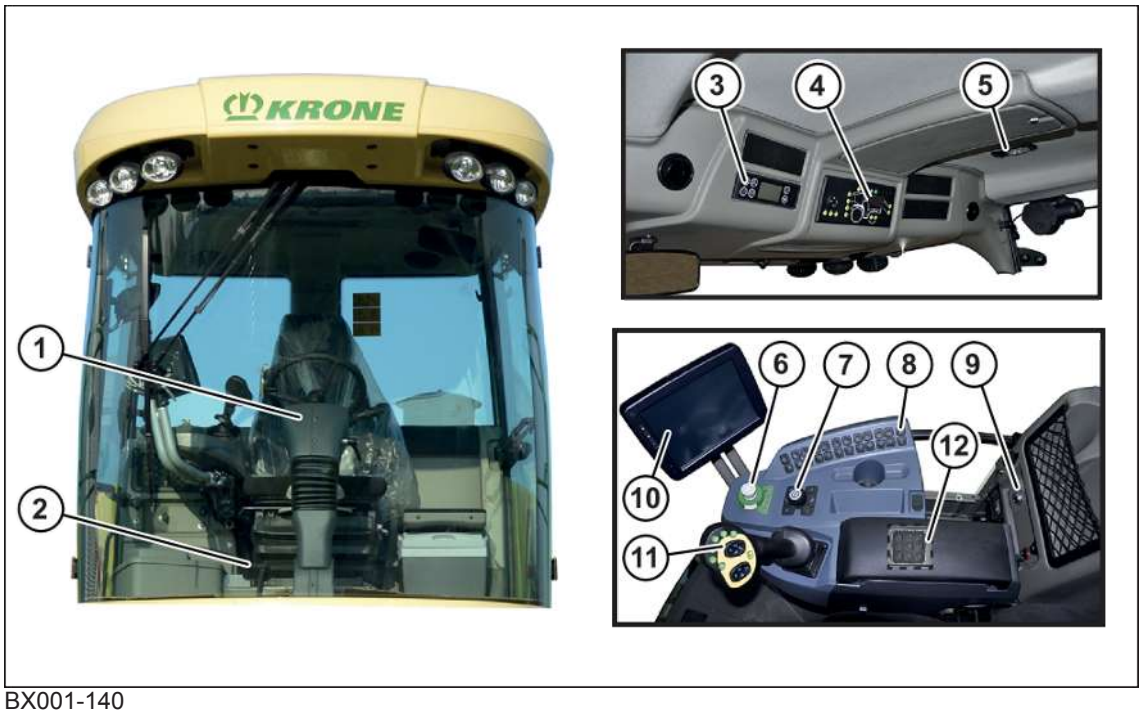

BX001-140

1	Steering column with steering wheel, *refer to page 79*	7	Navigation module, *refer to page 120*
2	Brake pedal, *refer to page 351*	8	Keypad, *refer to page 99*
3	Operation unit automatic climate control, *refer to page 104*	9	Ignition lock, *refer to page 102*
4	Light control unit, *refer to page 85*	10	Terminal, *refer to page 118*
5	Switch for interior lighting/lighting of control lever,*refer to page 95*	11	Control lever, *refer to page 95*
6	Main mode switch, *refer to page 101*	12	Additional keypad (optional), *refer to page 103*

6.2 Opening doors and windows of cabin

Opening right side window

To fully open the window on the right next to the driver's seat:

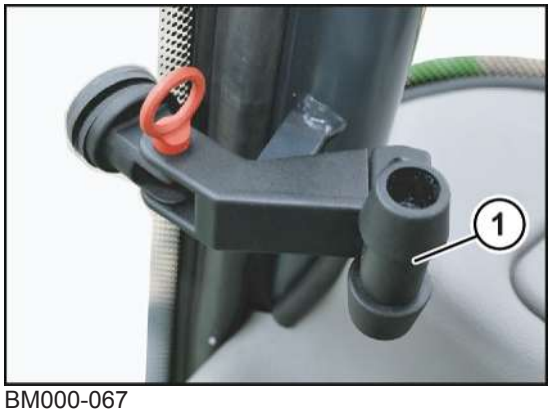

BM000-067

- Swivel the lever (1) forwards until it locks into position.

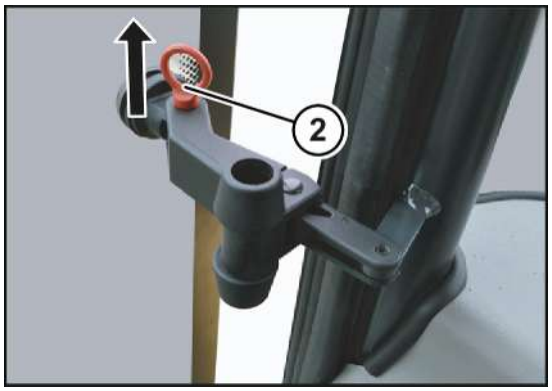

BM000-176

- Pull the cotter pin (2) and remove it.

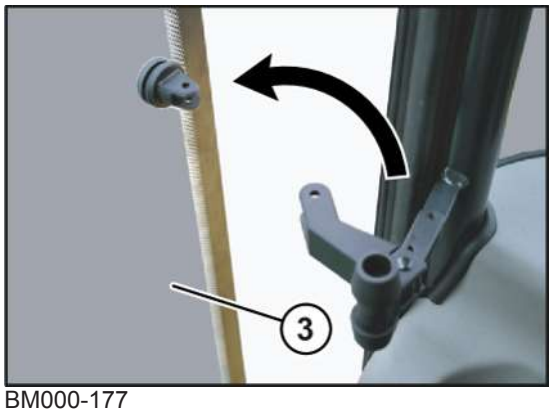

BM000-177

- Open the side window (3) all the way.

Opening the cabin door

Opening the cabin door from outside

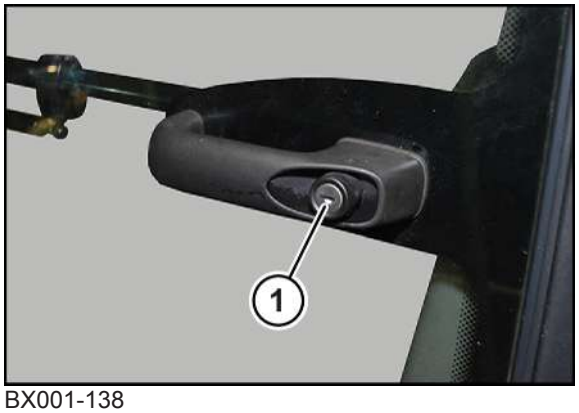

BX001-138

- Unlock the door lock (1) with the door key.
- Press in the door lock (1) and open the door.

Opening the cabin door from inside

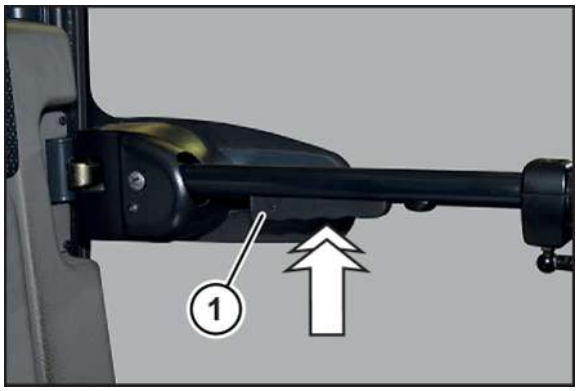

BX001-139

- Press up the door opening lever (1) and open the door outwards.

6.2.1 Emergency exit

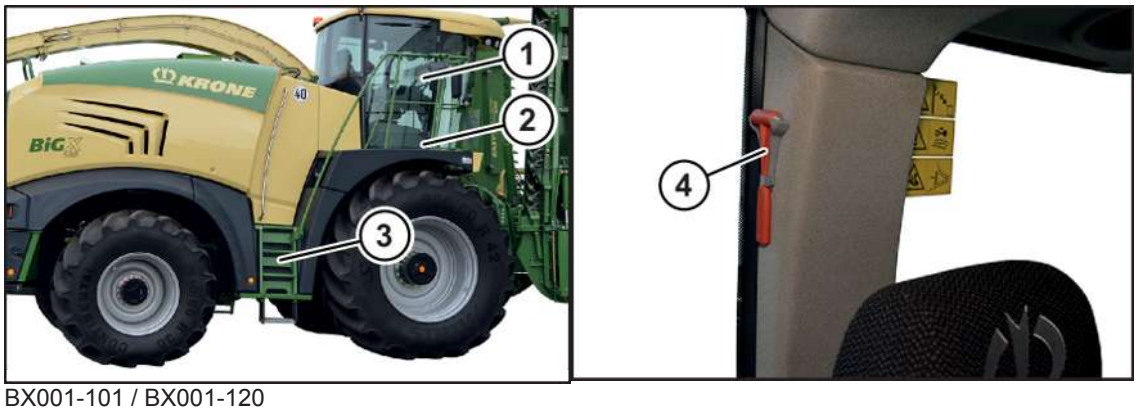

BX001-101 / BX001-120

On the right side of the cab is a side window (1) which is used as an emergency exit in an emergency.

- In case of an emergency, break the window using the emergency hammer (4) to leave the ladder (3) of the machine via right platform (2).
- Make sure that the right platform remains free so that the machine can be left safely in case of an emergency.

⚠ WARNING

Danger to life due to blocked escape route

If the right side window cannot be opened without obstruction, the escape route for the driver is obstructed.

- Make sure prior to travel that the right platform is free.

6.3 Control and display elements on the steering column

BM000-035

1 Steering wheel

2 Warning lights, *refer to page 83*

3 Unlocking pedal for steering column adjustment bottom, *refer to page 226*

4 Release lever for horizontal steering column adjustment and upper pivot point, *refer to page 226*

5 Steering column switch, *refer to page 80*

6.3.1 Steering column switch

6.3.1.1 Activating horn

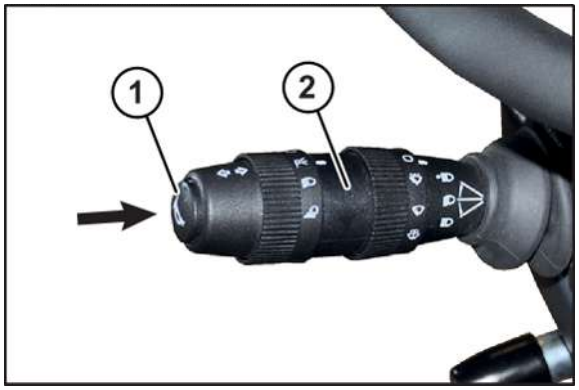

BM000-055

- ▶ To actuate the horn, press the momentary switch (1) for the horn on the steering column switch (2).
- ➡ As long as the momentary switch is pressed, the horn sounds.

6.3.1.2 Switching direction indicators on/off

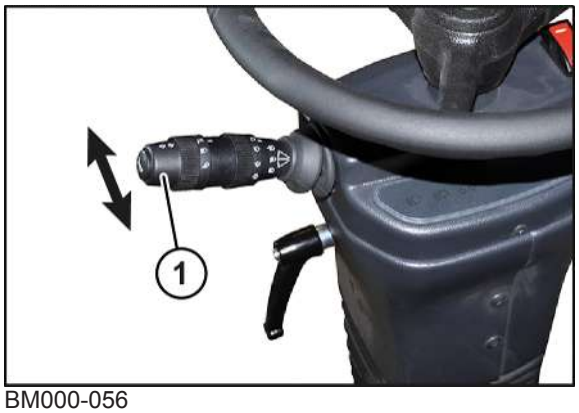

BM000-056

- ▶ To switch on the right direction indicator, move the steering column switch (1) forwards.
- ➡ The direction indicator on the right is switched on.
- ▶ To switch on the left direction indicator, push the steering column switch (1) backwards.
- ➡ The direction indicator on the left is switched on.

The direction indicator is switched off when the steering wheel is turned.

- ▶ To switch off the direction indicator when the steering wheel is not turned, move the steering column switch (1) in the opposite direction.

The warning light for direction indicator lights up when the direction indicator lamps have been switched on, *refer to page 83*.

6.3.1.3 Switching parking light/dipped beam on/off

BM000-059

The lighting setting ring gauge (2) on the steering column switch (1) can be turned to the following positions:

Pos.	Icon	Explanation
I		Switches the light off.
II		Switches the parking light on.
III		Switches dipped beam on.
IV		Inoperative

- ▶ To switch on the parking light, turn the lighting setting ring gauge (2) one notch forwards to position II.
- ➡ Front parking light and rear parking light are lit, *refer to page 87*.
- ✓ The ignition is switched on, *refer to page 102*.
- ▶ To switch on the dipped beam, turn the lighting setting ring gauge (2) to the second notch forwards to position III.
- ➡ The green dipped beam indicator lamp is lit, *refer to page 83*.
- ➡ Dipped beam, front parking light, licence plate lamp and rear position lamp are on, *refer to page 87*
- ▶ To switch off the parking light and dipped beam, turn the lighting setting ring gauge (2) to the last notch backwards to position I.
- ➡ All the lights have been switched off.

6.3.1.4 Switching full beam on/off

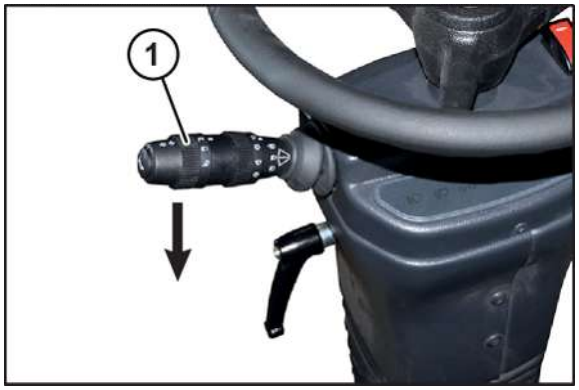

BM000-057

✓ The dipped beam has been switched on, *refer to page 81*.

▶ To switch on full beam, press the steering column switch (1) downwards.

➡ The steering column switch locks in this position and full beam is switched on.

➡ The blue warning light full beam is on, *refer to page 83*.

▶ To switch off full beam, move the steering column switch (1) to the neutral position.

6.3.1.5 Actuating headlamp flasher

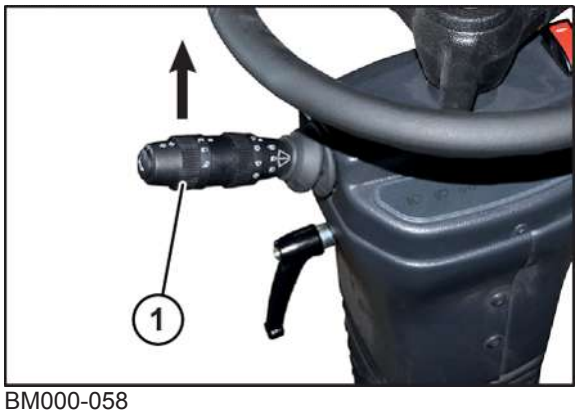

BM000-058

▶ To activate the headlamp flasher, pull the steering column switch (1) upwards.

➡ As long as the steering column switch is pulled upwards, the full beam and the blue warning light full beam light up, *refer to page 83*.

6.3.1.6 Switching windshield wipers on/off

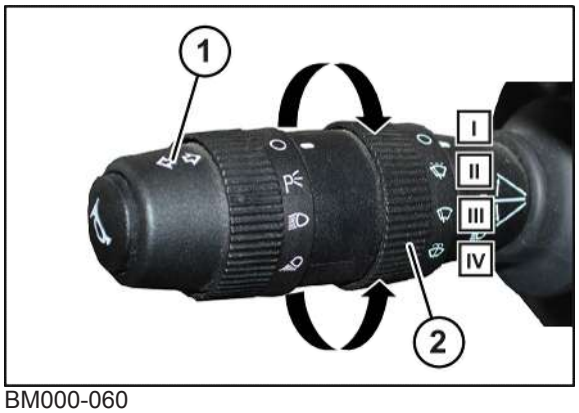

BM000-060

The setting ring gauge (2) for the windshield wiper on the steering column switch (1) can be turned to the following positions:

Pos.	Icon	Explanations
I		Switches the windscreen wiper off.
II		Switches on interval mode of the windscreen wiper.
III		Switches on continuous operation of the wind-screen wiper.
IV		Switches on the windscreen washer system.

- ▶ To switch on the wiper in interval mode, turn the setting ring gauge (2) one notch forwards to position II.
- ➡ The windshield wiper operates in interval mode.
- ▶ To switch on the wiper in continuous operation, turn the setting ring gauge (2) to the second notch forwards to position III.
- ➡ The windshield wiper operates in continuous operation.
- ▶ To switch on the windscreen washer system, turn the setting ring gauge (2) to the third notch forwards to position IV.
- ➡ The windscreen washer system is operating.
- ▶ To switch off the wiper, turn the setting ring gauge (2) to the last notch backwards to position I.
- ➡ The wiper returns to the rest position and stops.

6.3.2 Warning lights

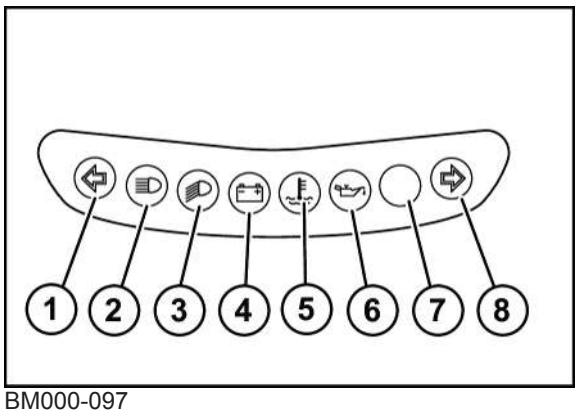

BM000-097

1	Warning light for direction indicator left	5	Warning light for coolant temperat-ure
2	Warning light for full beam	6	Warning light for engine oil pres-sure
3	Warning light for dipped beam	7	not assigned
4	Charging warning light	8	Warning light for direction indicator on right

6.3.3 Switching the flashing warning light on/off

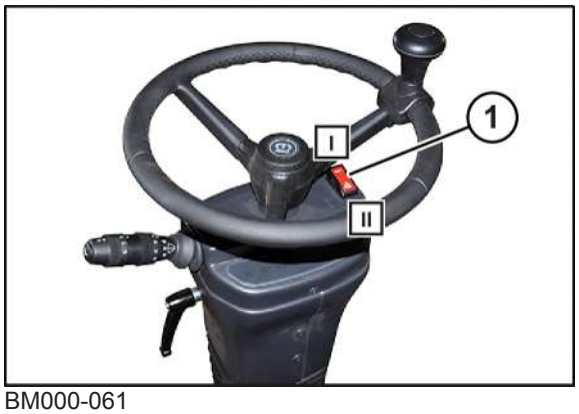

BM000-061

- ▶ To switch on the flashing warning light, press the flashing warning light switch (1) to position II.
- ➡ When the flashing warning light is switched on, all direction indicators flash simultaneously and the warning lights for the direction indicators on the left and right are lit, *refer to page 83*.
- ▶ To switch off the flashing warning light, press the flashing warning light switch (1) to position I.
- ➡ The warning lights for direction indicators on the left and right go out.

6.4 Actuating service brake

⚠ *WARNING*

Risk of accident due to defective service brake!

If the service brake has a restricted function, the machine cannot be brought to a standstill in time. Thus there is a risk of serious injuries or death.

- ▶ Before starting the machine, always check service brake and ensure its functionality.

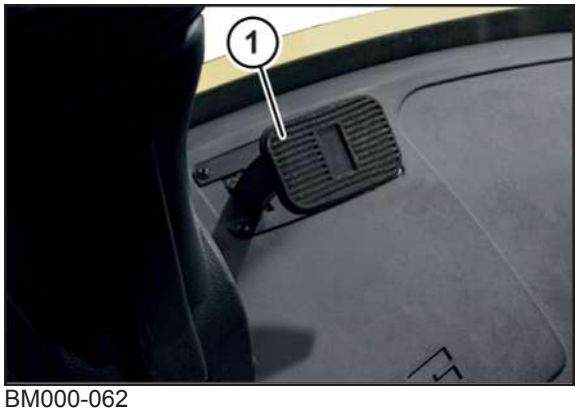

BM000-062

- ▶ Before driving, check the service brake, drive the machine at low speed one metre forwards and actuate the brake pedal (1).
- ➡ If the machine brakes, the service brake is functioning correctly.
- ➡ If the machine does not brake, stop driving the machine.
  - ▶ Shut down and secure the machine, *refer to page 34*.
  - ▶ Have a technician check and repair the service brake.

6.5 Actuate the trailer brake system (for "trailer brake system" version)

⚠ WARNING

Danger of death due to extended braking distance

If the machine features a trailer brake system and if both brake pedals of the service brake are not interconnected for road travel, the braking distance will be extended. If only one of the two service brakes is actuated, the individual braking effect of the service brake machine and service brake trailer will not be adequate to stop the machine/trailer unit in good time. As a result, people may be seriously injured or killed.

- Before road travel, ensure that both brake pedals are interconnected.

The trailer brake system is designed to be operated with a trailer.

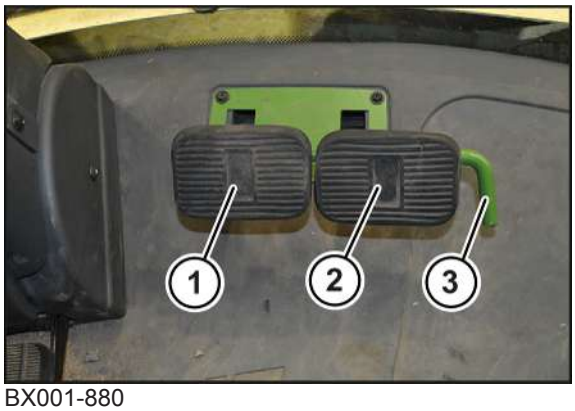

BX001-880

1 Brake pedal service brake machine
2 Brake pedal service brake trailer
3 Connecting bolt

The brake pedals (1, 2) are interconnected via the connecting bolt (3).

To be able to brake the trailer separately, the connection between the two brake pedals (1, 2) can be removed via the connecting bolt (3). Both brake pedals (1, 2) may be released in field mode only.

The function of the trailer brake system must always be checked before setting off:

- Actuate the parking brake, *refer to page 352*.
- A 2nd person must check whether the brake linkage on the trailer moves.
  - ⇨ If a movement on the brake linkage is observed, the trailer brake system has been correctly set.
  - ⇨ If no movement on the brake linkage is observed, the machine/trailer unit consisting of forage harvester and trailer must not be moved any further.
- Shut down and safeguard the machine, *refer to page 34*.
- Have a technician check and repair the trailer brake system.

6.6 Lighting

6.6.1 Light control unit

The Light Control Unit is used to switch the working lights, mirror heating and the wipers on and off and to adjust the outside mirrors.

If one of the functions is active, an LED above the corresponding key lights up.

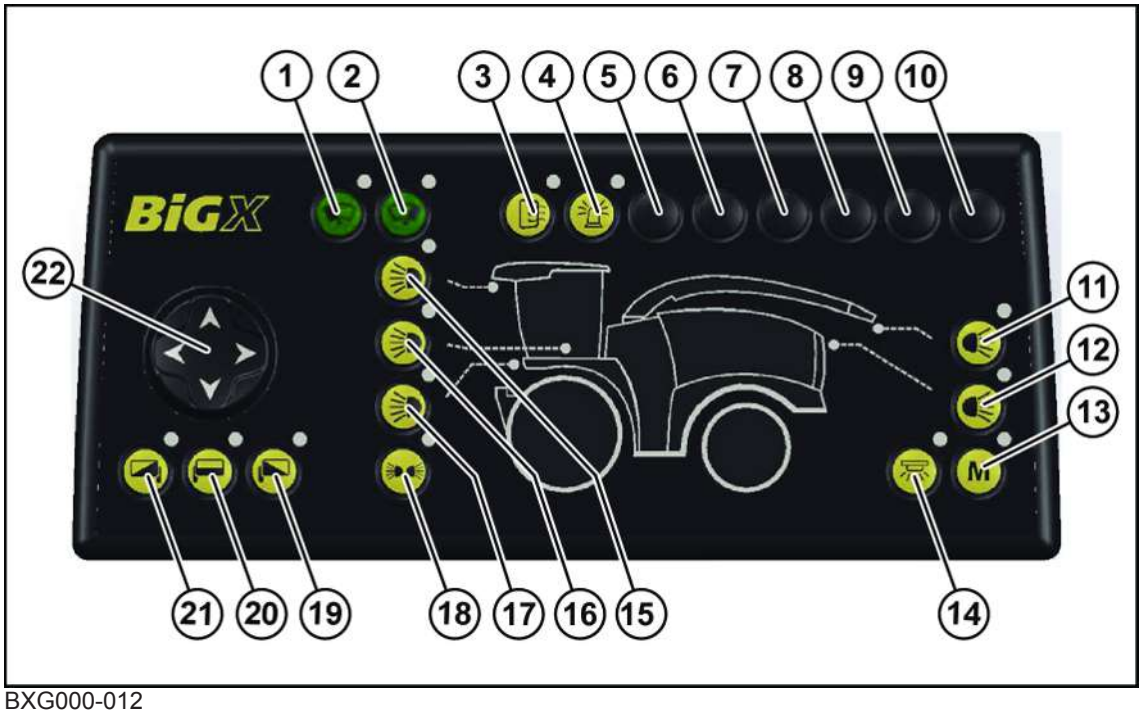

BXG000-012

Pos.	Designation	Explanation
1	"Left wiper" key	Switches the left wiper on/off
2	"Right wiper" key	Switches the right wiper on/off
3	"Mirror heating" key	Switches the heating on/off for the outside rear-view mirrors and the anti-collision mirror.
4	"Warning beacon" key	Switches the warning beacons on/off.
5	not assigned	
6	not assigned	
7	not assigned	
8	not assigned	
9	not assigned	
10	not assigned	
11	"Working light spout" key	Switches the working lights spout on/off.
12	"Rear working light" key	Switches the rear working lights on/off.
13	"Memory" key	Switches a programmed combination of working lights on/off, *refer to page 88*.
14	"Maintenance lighting" key	Switches the maintenance lighting on/off.
15	"Working lights cabin roof" key	Switches the cabin roof working lights on/off.
16	"Platform working lights" key	Switches the platform working lights on/off.
17	"Front guard working lights" key	Switches the front guard working lights on/off.
18	"All working lights" key[1]	Switches all working lights on/off.
19	"Right outside rear-view mirror" key	Activates the right outside rear-view mirror for mirror adjustment.

Pos.	Designation	Explanation
20	“Anti-collision mirror” key	Activates the anti-collision mirror for adjusting the mirror.
21	"Left outside rear-view mirror" key	Activates the left outside rear-view mirror for mirror adjustment.
22	"Mirror adjustment" control panel	Adjusts the reflecting surface of the mirror which has a lit indicator lamp.

[1] The "All working lights" key switches the working lights on/off only if the parking light has been switched on.

6.6.1.1 Road travel lighting

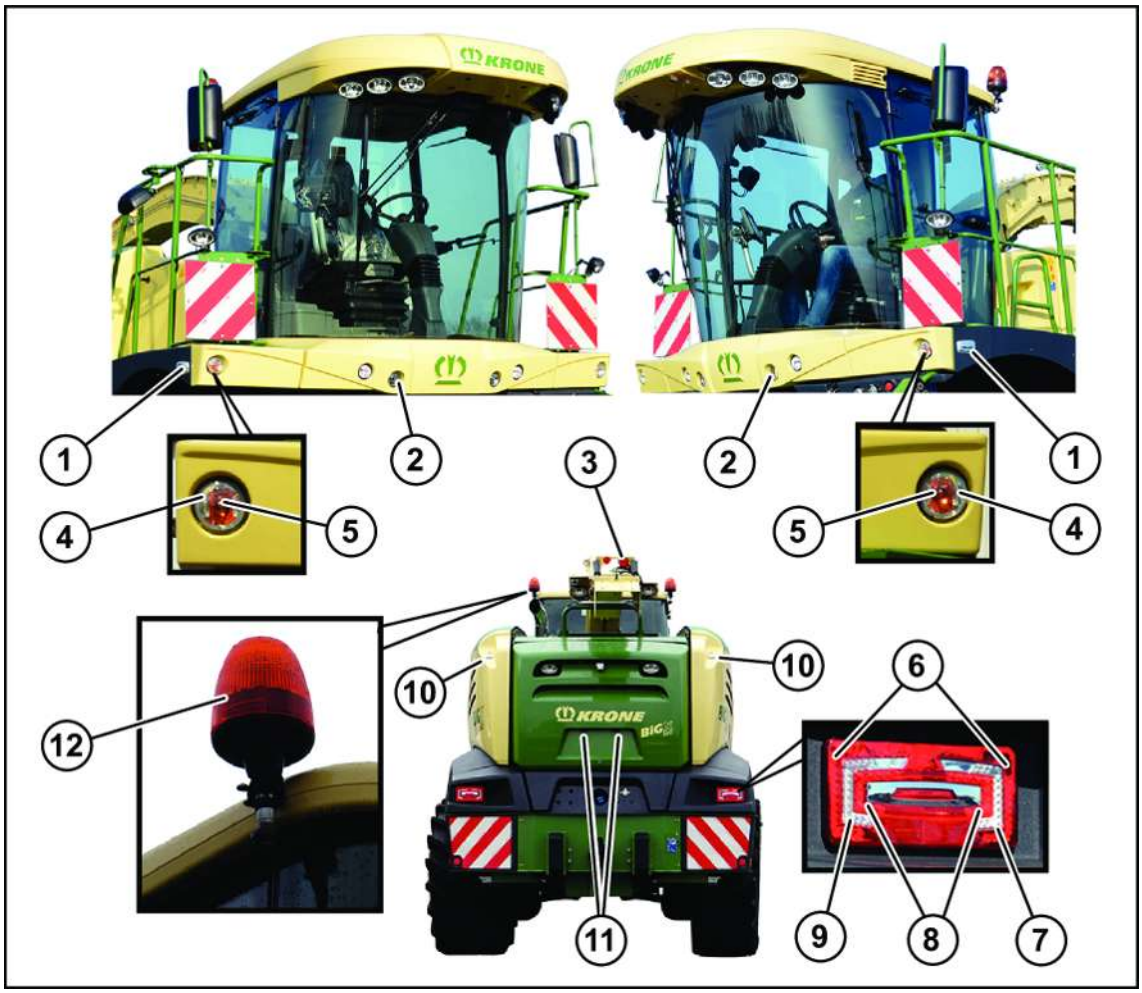

BXG000-049

1 Side direction indicator/flashing warning lamp
2 Dipped beam/full beam
3 Spout tail lamp/brake lamp
4 Front position lamp
5 Front direction indicator/flashing warning lamp
6 Rear position lamp/rear parking light
7 Rear direction indicator/flashing warning lamp
8 Brake lamp
9 Reversing light
10 Top rear direction indicator/flashing warning lamp
11 Licence plate lamp
12 Warning beacon

> ***INFORMATION***
>
> As long as the lighting cable is connected for an EasyCollect or XCollect maize header, the front direction indicators (5) will not be lit.

6.6.1.2 Working lights

> ***⚠ WARNING***
>
> **Risk of accident from dazzling working lights**
>
> If the working lights are not switched off during road travel, road users may be blinded.
>
> ▶ Switch the working lights off during road travel.

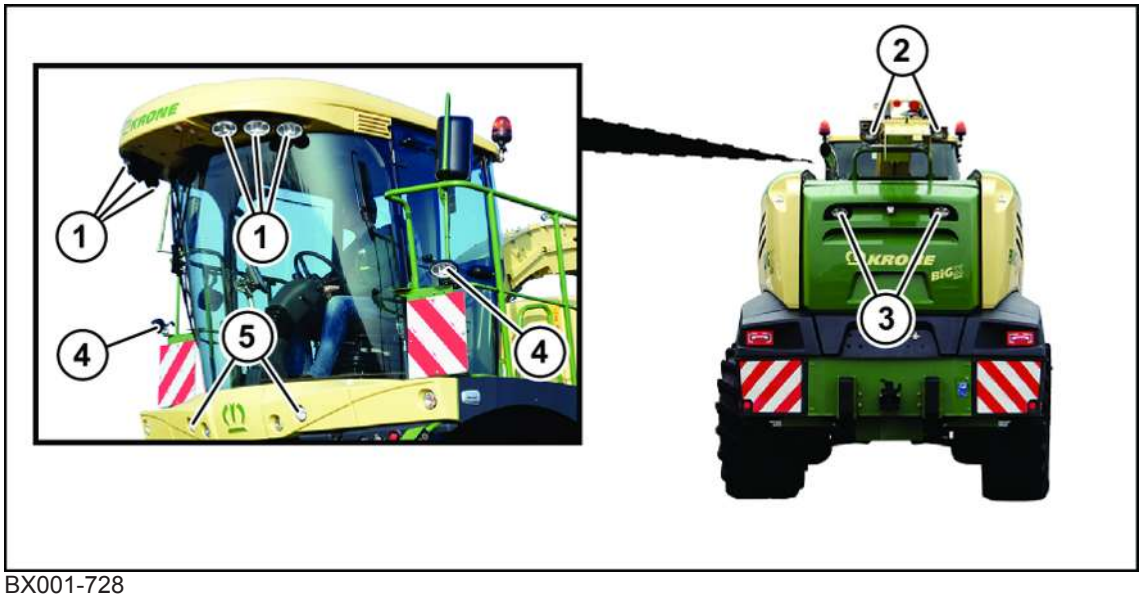

BX001-728

1	Working light on cabin roof	4	Front working light II
2	Spout working light	5	Front working light I
3	Working light on rear		

6.6.1.3 Switching and saving working lights via “Memory” key

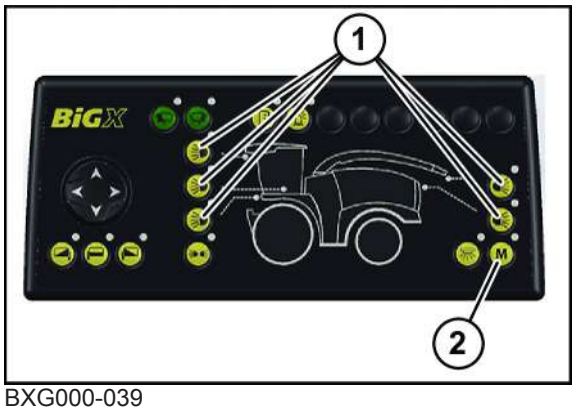

BXG000-039

The "Memory" key (2) can be used to combine several working lights (1) into one lighting scenario so that they can be switched on or off simultaneously.

- ▶ To save a lighting scenario with different working lights, switch on the required working lights (1) with the corresponding keys and press the "Memory" key (2) for 3 seconds.
- ➡ The lighting scenario is saved. For monitoring purposes the LED above the "Memory" key (2) flashes.
- ▶ To switch on the working lights (1) of the saved lighting scenario, press the "Memory" key (2).
- ➡ The working lights (1) of the saved lighting scenario light up. For monitoring purposes the LEDs are lit above the keys which belong to the lighting scenario.
- ▶ To switch off the working lights (1) of the saved lighting scenario, press the "Memory" key (2).
- ➡ The working lights (1) of the saved lighting scenario go out. For monitoring purposes the LEDs go out above the keys which belong to the lighting scenario.
- ▶ To save a new lighting scenario, repeat the saving process with different working lights (1).
- ➡ The previous lighting scenario is overwritten.

6.6.1.4 Warning beacons

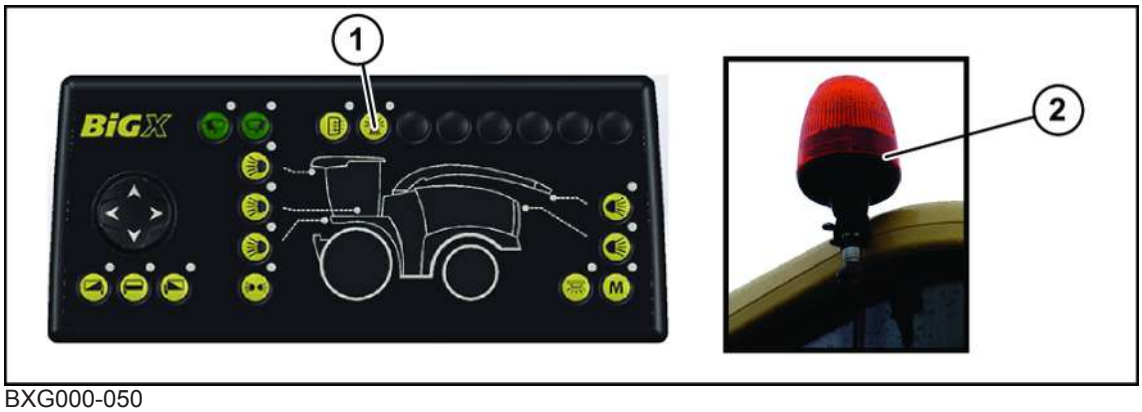

BXG000-050

> ***INFORMATION***
>
> In some countries the warning beacons must be switched on for road travel. Observe the respective national statutory regulations.

The warning beacons (2) are automatically switched on when the main mode switch is set to "road mode".

- ▶ To manually switch off the warning beacons (2), press the "Warning beacons" key (1) on the light control unit.
- ➡ The LED above the key (1) goes out.

6.6.1.5 Maintenance lighting

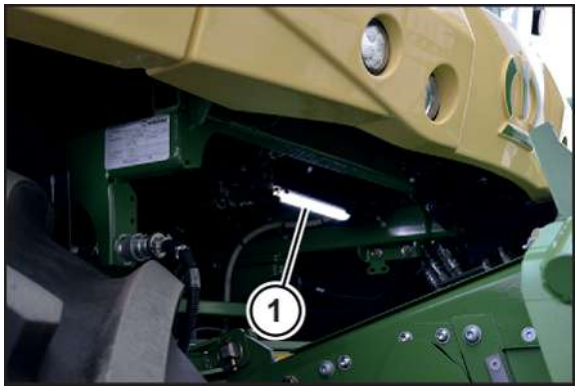

BX001-212

1 Maintenance light

Maintenance lighting (for "LED package 2" and "LED package 3" version)

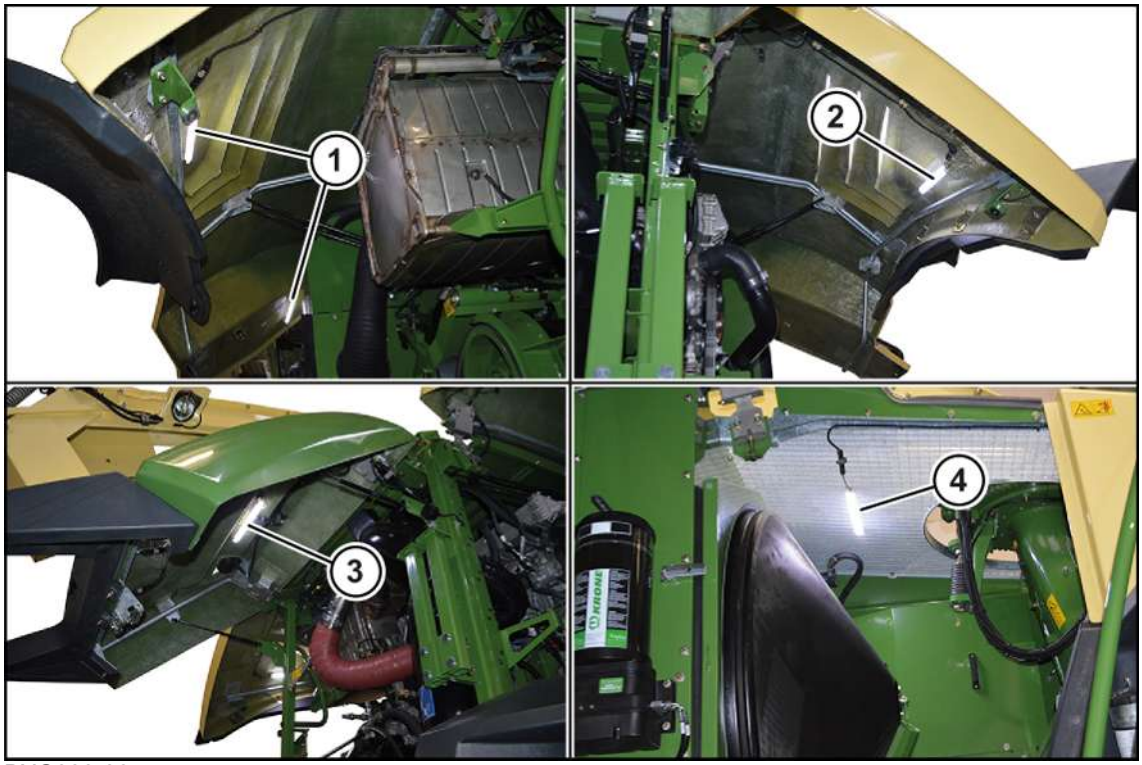

BXG000-067

1 Maintenance lamps left side hood
2 Maintenance lamp right side hood
3 Maintenance lamp tailgate
4 Maintenance lamp cooler compartment

6.6.1.6 Wiper on left/on right

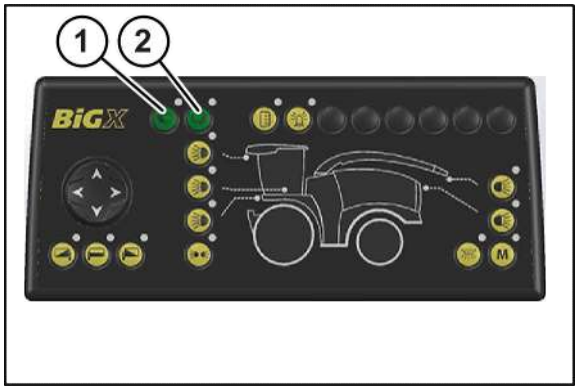

BXG000-051

- ▶ To switch on the left wiper, press the "Left wiper" key (1) on the light control unit.
- ➡ The left wiper wipes, the LED above the key is lit.
- ▶ To switch off the left wiper, press the "Left wiper" key (1).
- ➡ The left wiper goes into park position, LED above the key goes out.
- ▶ To switch on the right wiper, press the "Right wiper" key (2) on the light control unit.
- ➡ The right wiper wipes, the LED above the key is lit.
- ▶ To switch off the right wiper, press the "Right wiper" key (2).
- ➡ The right wiper goes into park position, LED above the key goes out.

6.6.1.7 Setting mirror

Adjusting outside rear-view mirrors

⚠ *WARNING*

Danger to life of persons next to and behind the machine due to impaired view of the driver!

If the outside rear-view mirrors are not correctly set, the driver does not have a proper view of the area around the machine, possibly placing people in danger when the machine is being driven.

- ▶ Before driving the machine, set the outside rear-view mirrors so that the rear area is fully visible to the driver from the driver’s seat.

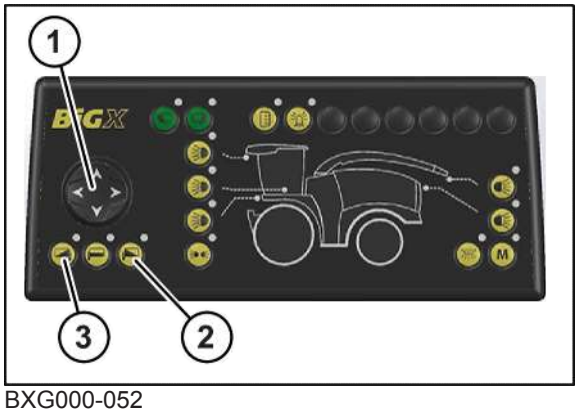

BXG000-052

- In order to adjust the left outside rear-view mirror, press the “Left outside rear-view mirror” key (3).
  - ⇨ The LED above the key lights up.
- Press the "Mirror adjustment" control panel (1) in the direction in which the selected mirror is to be adjusted.

➡ The area of the left outside rear-view mirror swivels in the desired direction.

- In order to adjust the right outside rear-view mirror, press the “Right outside rear-view mirror” key (2).
  - ⇨ The LED above the key lights up.
- Press the "Mirror adjustment" control panel (1) in the direction in which the selected mirror is to be adjusted.

➡ The surface of the right outside rear-view mirror swivels in the desired direction.

Setting the anti-collision mirror

⚠ *WARNING*

Danger to life of persons on right next to the machine as the driver only has an impaired view!

If the anti-collision mirror has not been set correctly, the driver does not have a proper view of the ground area next to the right front wheel, possibly placing people in danger when the machine is being driven.

- Before starting to drive, set the anti-collision mirror so that the ground area next to the right front wheel is fully visible to the driver from the driver’s seat.

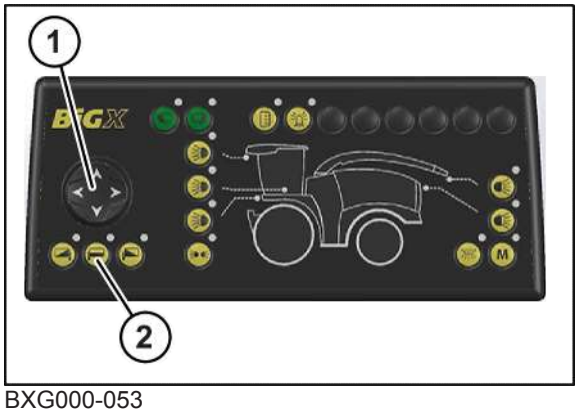

BXG000-053

- To adjust the anti-collision mirror, press the "Anti-collision mirror" key (2).
  - ⇨ The LED above the key lights up.
- Press the "Mirror adjustment" control panel (1) in the direction in which the selected mirror is to be adjusted.
- ➡ The area of the anti-collision mirror swivels in the required direction.

Switching mirror heating on/off

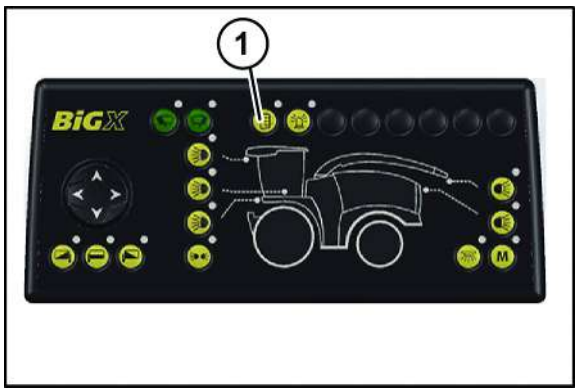

BXG000-054

- To heat the outside mirrors and the anti-collision mirror, press the "Mirror heating" key (1).
- ➡ The LED above the key lights up. The heating for the outside mirrors and the anti-collision mirror has been switched on.
- To switch off the heating for the outside mirrors and the anti-collision mirror, press the "Mirror heating" key (1).
- ➡ The LED above the key goes out. The heating for the outside mirrors and the anti-collision mirror has been switched off.

6.6.2 Lighting on ladder cabin and ladder right

For the "Ladder and maintenance lighting" version

The steps can be lit, so that even in darkness, the steps on the ladder to the cabin and on the ladder on the right can be clearly identified.

BXG000-041

Leaving Home function

The Leaving Home function allows the cabin to be entered safely, even in the dark.

- ▶ To activate the "Leaving Home" function, press the "Ladder lighting" (3) key.
- ➡ The lights (1), (2), (4) and (5) light up for a certain amount of time.

Coming Home function

The Coming Home function allows the cabin to be left safely, even in the dark.

- ▶ The activate the Coming Home function, turn the ignition key to the "STOP" position.
- ➡ The lights (1), (2), (4) and (5) light up for a certain amount of time.

6.6.3 Interior lighting

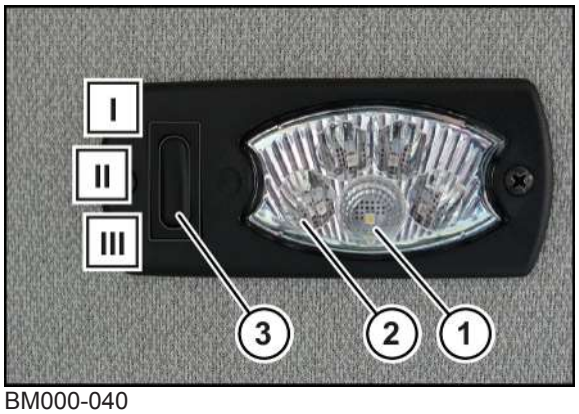

BM000-040

The interior lamp (2) is located on the cab roof and is switched with the switch (3).

The switch has 3 positions:

Pos.	Explanation
I	The interior lamp is switched via the door contact switch.
II	The interior lamp has been switched off.
III	The interior lamp has been switched on.

Switching logic when the switch (3) is in position II:

- When the cabin door is opened, the interior lamp (2) is switched on and is switched off again after a delay.
- When the cabin door is being opened, the interior lamp (2) is switched on. As soon as ignition stage II is switched on *refer to page 344*, the interior lamp (2) goes out.
- When the diesel engine has been switched off, the interior lamp (2) is switched on and goes out after a short time.

In addition to the interior lamp (2), the lighting for the control lever (1) is switched on as soon as the parking, dipped or full beam has been switched on.

6.7 Operating elements on control lever

The control lever is used to make important settings and issue commands for road and field mode of the machine.

BXG000-010

The keys on the control lever are used to run machine functions. The keys are assigned either to sensing mode, step mode or 2-stage operation. Depending on the particular key operating mode involved, there are 2 methods of running the machine functions:

- Sensing mode: The function is activated and completely run by tapping the key. The function is not stopped by releasing the key.
- Step mode: The function is run for as long as the key is pressed.

In the description below only the keys that are used for sensing mode are identified; all other keys are used for step mode.

Pos.	Designation	Explanation
1	"Intake/header" key	Switches the intake/header on/off (sensing mode).
2	"Reversing intake/header" key	Reverses the intake/header.
3	"M1" key	Freely assignable memory key.
4	"M2" key	Freely assignable memory key.
5	"Automatic steering system" key	Switches the automatic steering system (optional) on/off (only for field mode with EasyCollect) (sensing mode).

Pos.	Designation	Explanation
6	"Reversing/parking spout" key	When main coupling is switched on: Reverses the position of the spout (sensing mode).
		When main coupling is switched off: Swivels the spout into the transport position (sensing mode).
7.1	"Spout flap up" key	Raises the spout flap (2 stages).
7.2	"Turn spout right" key	Turns the spout to the right (2 stages).
7.3	"Spout flap down" key	Lowers the spout flap (2 stages).
7.4	"Turn spout left" key	Turns the spout to the left (2 stages).
8.1	"Lower lifting unit manually" key	Lowers the lifting unit to the lowest position (2 stages).
8.2	"Raise lifting unit automatically" key	Raises the lifting unit automatically to the headland position (sensing mode).
8.3	"Raise lifting unit manually" key	Raises the lifting unit (2 stages).
8.4	"Lower lifting unit automatically" key	Lowers the lifting unit to the working position (sensing mode).
9	"Traction drive" activation key	Releases the traction drive.
10	"Acceleration behaviour" switch	Switches the value for the acceleration behaviour.

Lever movements

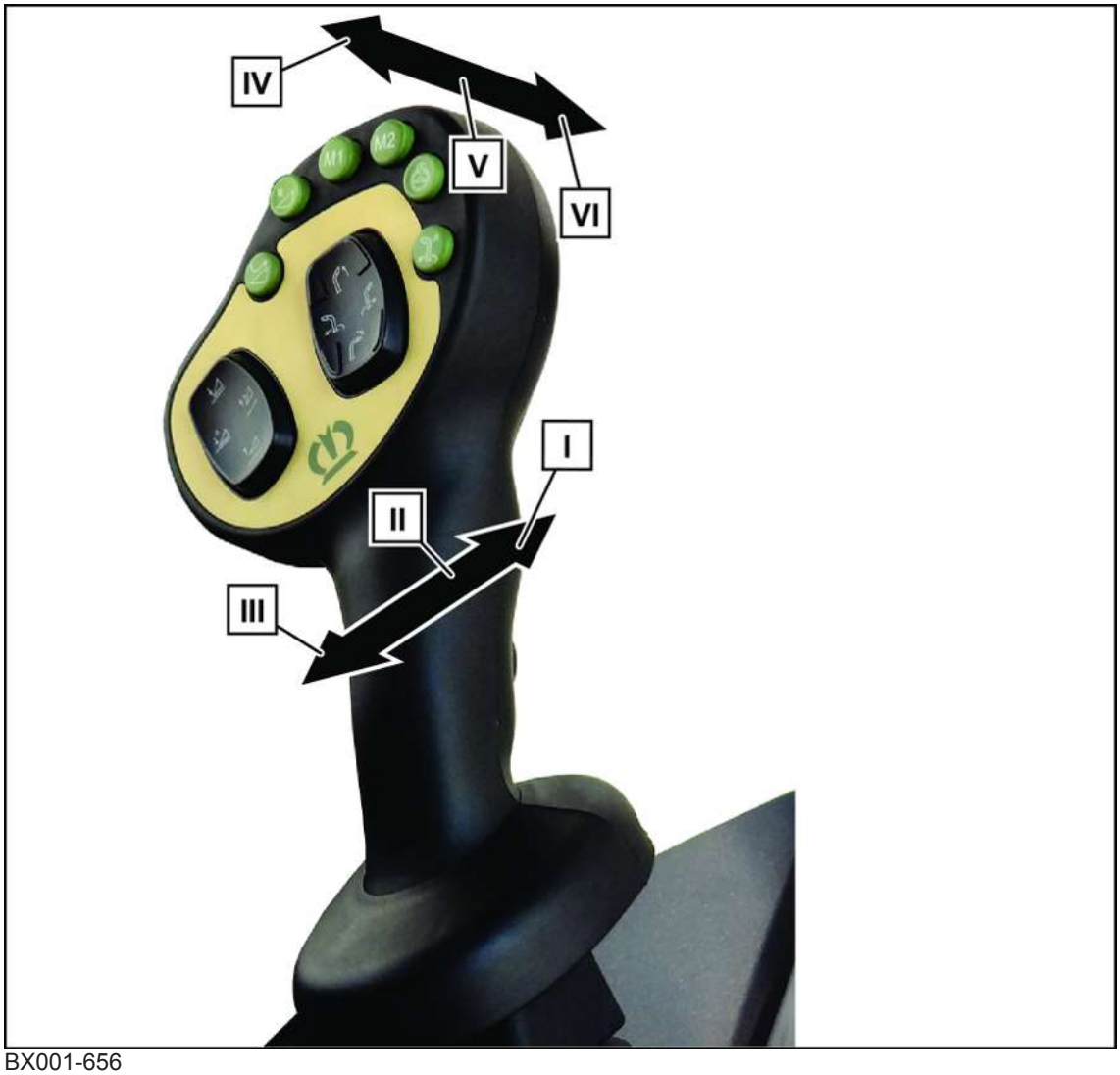

BX001-656

Pos.	Explanation
I	For forward travel: Acceleration (when activation key pressed at the same time)
	For reverse travel: Deceleration
II	Control lever in central position
III	For forward travel: Deceleration
	For reverse travel: Acceleration (when activation key pressed at the same time)
IV	Deceleration to 0 km/h
	In field mode when activation key pressed at the same time: fast reversing
V	Control lever in central position
VI	For forward travel: Switch on cruise control (when activation key pressed at the same time the current driving speed is saved)
	2x taps in field mode: Activates the load limit control "ConstantPower", *refer to page 386*.

6.8 Control and display elements on the keypad

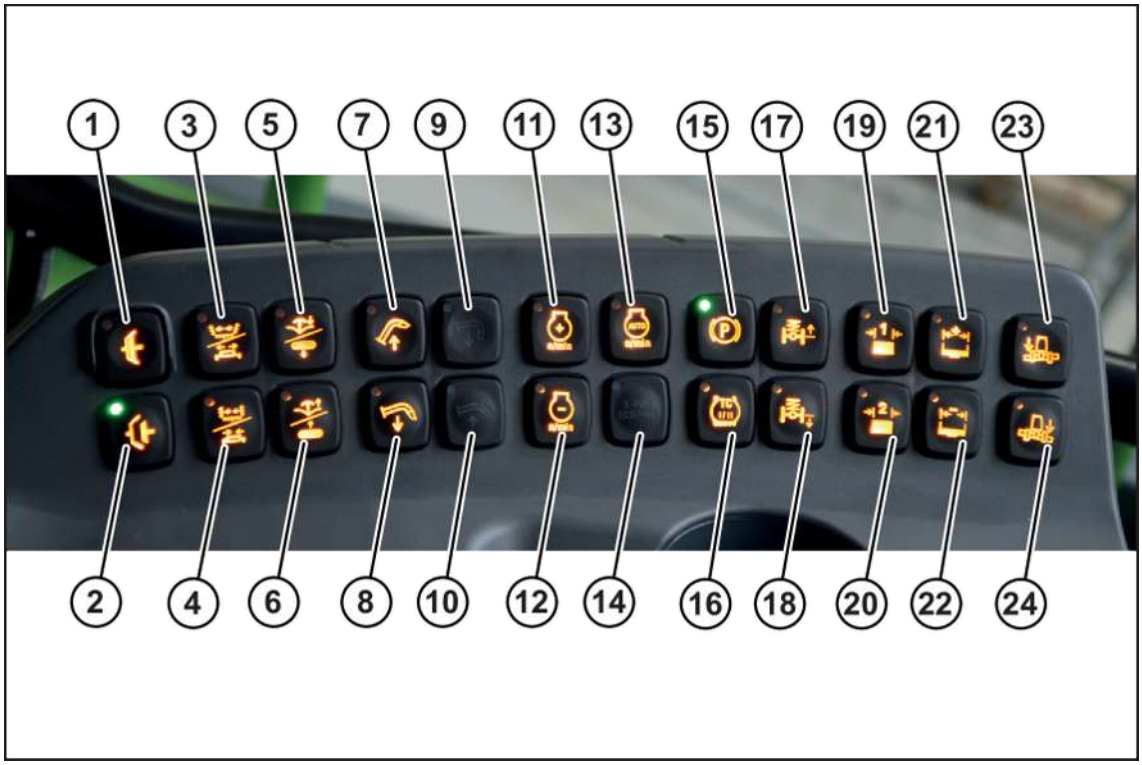

BXG000-011

- The keys that can be used to select functions light up.
- The top left LED in each key flashes on and off or lights up when the selected function is executed.

The keys on the keypad are used to run machine functions. The keys are designed either for sensing mode or step mode or 2-stage operation. Depending on the operating mode of the keys, there are 2 methods of running the machine functions:

- Sensing mode: The function is activated and completely run by tapping the key. The function is not stopped by releasing the key.
- Step mode: The function is run for as long as the key is pressed.

In the description below only the keys that are used for sensing mode are identified; all other keys are used for step mode.

Pos.	Designation	Explanation
1	"Main coupling on" key	Switches the main coupling on.
2	"Main coupling off" key	Switches the main coupling off.
3	"Hydraulic circuit 1" keys	For maize header: Folds out the maize header. For grass header: Swivels out the guide wheels.
4		For maize header: Folds in the maize header. For grass header: Swivels in the guide wheels.

Pos.	Designation	Explanation
5	"Hydraulic circuit 2" keys	For maize header: Lowers the plant divider. For grass header: Lowers the crop press roller unit.
6		For maize header: Raises the plant divider. For grass header: Raises the crop press roller unit.
7	"Raise spout" key	Raises the spout.
8	"Lower spout" key	Lowers the spout.
9	Key "Fold in spout extension"	Folds in the spout extension if installed.
10	Key "Fold out spout extension"	Folds out the spout extension if installed.
11	"Increase diesel engine speed" key	Increases the speed of the diesel engine.
12	"Reduce diesel engine speed" key	Reduces the speed of the diesel engine.
13	"Diesel engine speed" key	Switches between saved speed of the diesel engine and idle speed of the diesel engine (sensing mode).
14	"Eco/X-Power" key	Switches between Eco-Power mode and X-Power mode
15	"Parking brake" key	Applies the parking brake./ Releases the parking brake.
16	"Traction control system" key	Switches between TC I and TC II.
17	"Raise rear axle" key	Raises the rear axle.
18	"Lower rear axle" key	Lowers the rear axle.
19	"Chop length 1" key	Calls the chop length 1.
20	"Chop length 2" key	Calls the chop length 2.
21	"Increase working width" key	Increases the working width.
22	"Reduce working width" key	Reduces the working width.
23	"Lower pendulum tube on left" key	Lowers the pendulum tube on the left (sensing mode).
24	"Lower pendulum tube on right" key	Lowers the pendulum tube on the right (sensing mode).

Save speed of the diesel engine for "Diesel engine speed" key (13)

The speed of the diesel engine, which can be called via the "Diesel engine speed" key (13), is adjustable. The storable speed range is between 1700 rpm and 1900 rpm.

- Adjust the required speed of the diesel engine via the keys "Increase diesel engine speed" (11) and "Reduce diesel engine speed" (12).
- To save the adjusted rotational speed, press the "Diesel engine speed" key (13) for 3 seconds. An information message "Storage successful" appears.

Repeatedly pressing the "Diesel engine rotational speed" key (13) switches between the saved rotational speed and the idle rotational speed.

6.9 Main mode switch

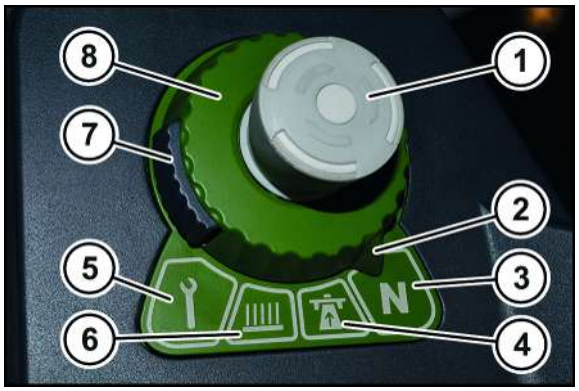

BM000-012

The Main Mode Switch (8) is used to select the operating mode of the machine.

Pos.	Designation	Explanation
1	Quick-stop switch	Stops the working functions. The diesel engine continues running.
2	Main Mode Switch tip	Indicates the selected operating mode.
3	"Neutral mode" switch position	Selects neutral mode.
4	"Road mode" switch position	Selects road mode.
5	"Field mode" switch position	Selects field mode.
6	"Maintenance mode" switch position	Selects maintenance mode.
7	Main Mode Switch unlocking device	Pressed unlocking device releases the rotary switch.
		Released unlocking device locks the rotary switch.
8	Main Mode Switch	Selects the operating mode of the machine.

To select an operating mode with the Main Mode Switch (8):

- Press and hold down the unlocking device (7) on the Main Mode Switch (8) and simultaneously turn the Main Mode Switch (8) to the required operating mode.

➡ The tip (2) indicates the selected operating mode.

To stop the working functions in an emergency:

- Press the quick-stop switch (1).

To release the working functions again:

- Unlock the quick-stop switch (1) by slightly turning it clockwise.

6.10 Quick-stop switch

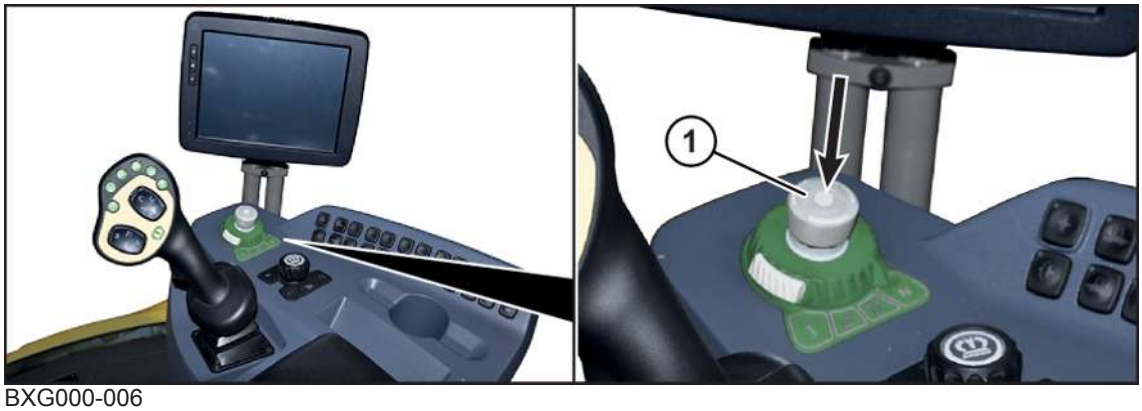

BXG000-006

The quick-stop switch (1) in the cabin is used to stop the working functions of the machine. The diesel engine continues running.

- ▶ To actuate it, press down the quick-stop switch (1) until it locks into position.
- ➡ The working functions are stopped. The switch is locked.

BXG000-058

- ▶ To release it, turn the quick-stop switch (1) clockwise until the home position is reached.
- ➡ The working functions are activated. The switch is released.

6.11 Ignition lock

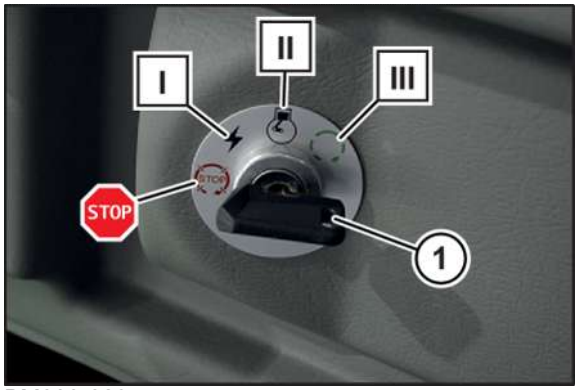

BM000-029

The ignition key (1) can be turned to 4 different positions in the ignition lock:

Pos.	Explanation
STOP	The circuit is interrupted.
I	The circuit for the electronics is switched on.
II	The ignition is switched on
III	Start position

6.12 Additional keypad

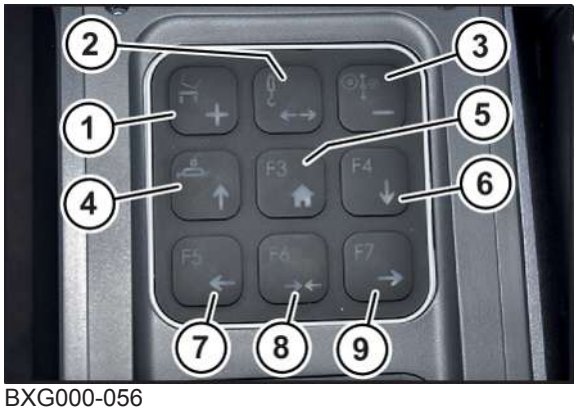

BXG000-056

The additional keypad is located in the right armrest of the driver's seat.

▶ To access the additional keypad, open the right armrest.

The keys on the control lever are used to run machine functions. The keys are assigned either to sensing mode, step mode or 2-stage operation. Depending on the particular key operating mode involved, there are 2 methods of running the machine functions:

- Sensing mode: The function is activated and completely run by tapping the key. The function is not stopped by releasing the key.
- Step mode: The function is run for as long as the key is pressed.

In the description below only the keys that are used for sensing mode are identified; all other keys are used for step mode.

Pos.	Designation	Explanation
1	"Select hopper/plus" key	• Selects the "hopper" function. • Increases a value.
2	"Select hitch attachment/extend" key	• Selects the "hitch attachment" function. • Locks a component. • Extends a component.
3	"Select additional axle/minus" key	• Selects the "additional axle" function. • Reduces a value.
4	"Open/lift header locking" key	• Selects the "Header locking" function, for "Hydraulic header locking with quick-coupler" version. • Lifts a component.
5	"Adjust discharge distance/home" key	• Selects the "Adjust discharge distance" function, for "StreamControl" version.
6	"Lower" key	• Lowers a component.

Pos.	Designation	Explanation
7	"Left" key	• Moves a component to the left.
8	"Retracted" key	• Releases a component. • Retracts a component.
9	"Right" key	• Moves a component to the right.

To operate a function using the additional keypad:

▶ Select the function using keys (1) to (5) (e.g. the "Open header locking" function).

➡ The keys are automatically lit which are available to change a value or move a component.

▶ To change a value or move a component, press the corresponding key.

▶ To return to function selection, press the key (5).

INFORMATION

Step mode or continuous operation can be selected for the "Hopper" and "Hitch attachment" functions; to do this, set the required mode in the auxiliary hydraulics "Settings" menu, *refer to page 204*.
Continuous operation is only possible up to a machine driving speed of maximum 5 km/h.

6.13 Automatic climate control

6.13.1 Overview of automatic climate control

The driver can use the automatic climate control operation unit to operate the air conditioning and heating system of the cabin.

INFORMATION

If the power supply to the control unit of the automatic climate control is interrupted, the control unit performs a self test after power is restored. After the self test is complete, the last setting to be saved appears.

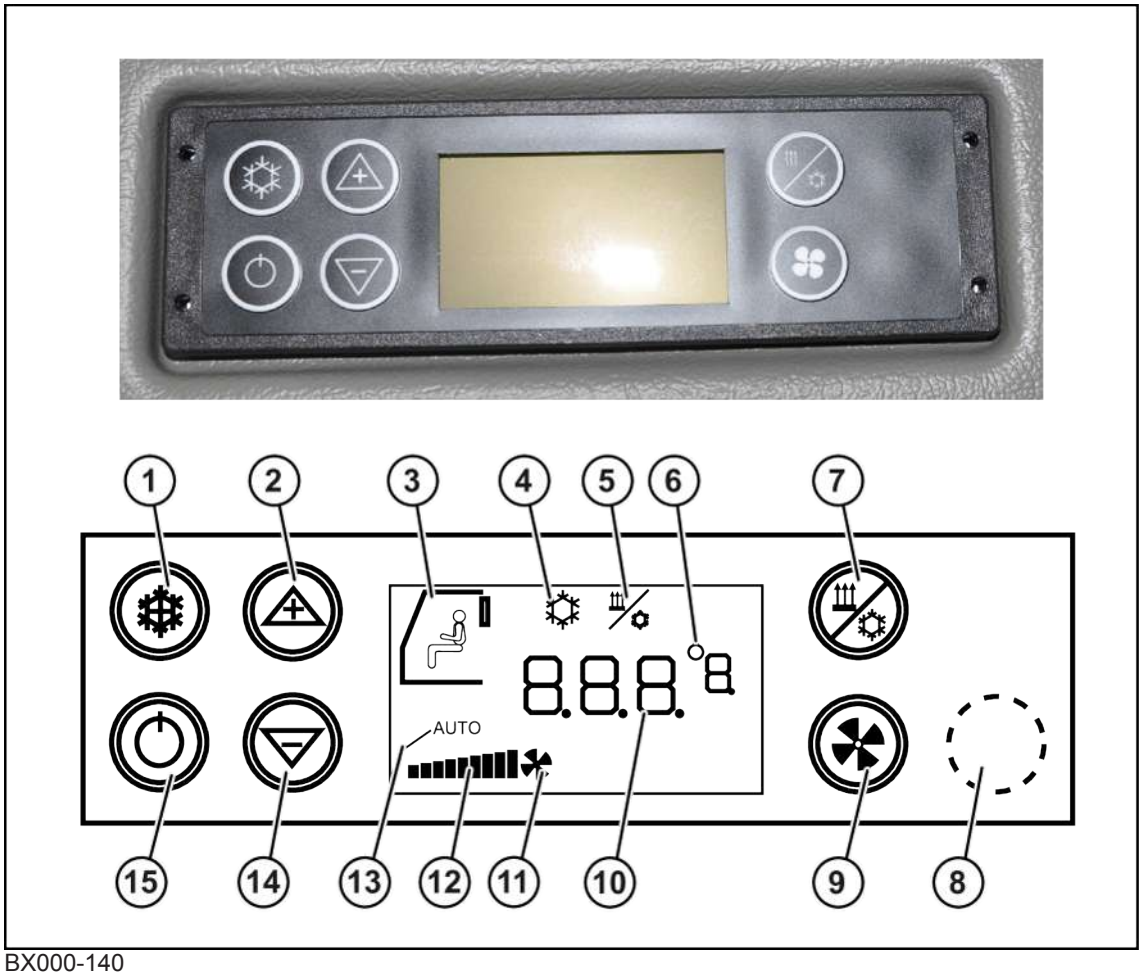

BX000-140

Pos.	Designation	Explanation
1	Air conditioning mode key	Switches air conditioning mode on/off.
2	Plus key	In automatic mode: Increases the value for the required cabin temperature. In manual mode: Increases the rotational speed of the evaporator fan.
3	Icon for the cabin	Indicates the air flow in the cabin in REHEAT mode.
4	Air conditioning mode icon	Air conditioning mode has been switched on.
5	REHEAT mode icon	REHEAT mode has been switched on.
6	Temperature unit	Indicates the temperature unit of the setpoint value of the cabin temperature in °C or °F.
7	REHEAT key	Switches REHEAT mode (dehumidifying cabin air) on/off.
8	Shift key for temperature units	Switches between temperature units °Celsius/ °Fahrenheit (key covered)
9	Shift key for operating mode	Automatically/manually switches between rotational speed of the evaporator fan.
10	Numeric display	Indicates the setpoint value of the cabin temperature or the error code.
11	Manual fan mode icon	Appears in manual fan mode.

Pos.	Designation	Explanation
12	Bar icon for the rotational speed of the evaporator fan	Indicates the rotational speed of the evaporator fan in manual mode.
13	Fully automatic mode icon	Fully automatic mode has been switched on.
14	Minus key	In automatic mode: Reduces the value for the required cabin temperature. In manual mode: Reduces the rotational speed of the evaporator fan.
15	Control unit on/off key	Switches the control unit on/off.

6.13.2 Switching on automatic climate control

▶ To switch on automatic climate control, press .

When the automatic climate control has been switched on, the control unit performs a self test. The software version is displayed for approx. 5 seconds.

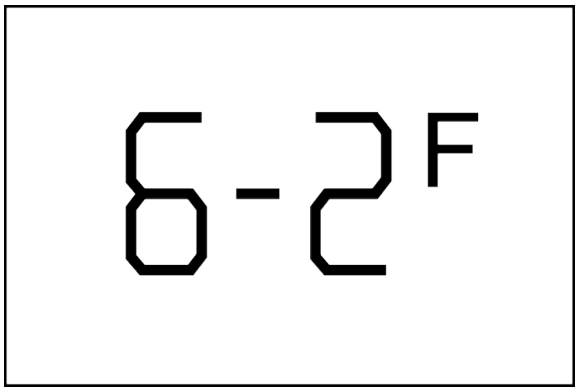

EQ002-096

Then the operating hours of the air conditioning are displayed for 5 seconds (e.g. 6 operating hours).

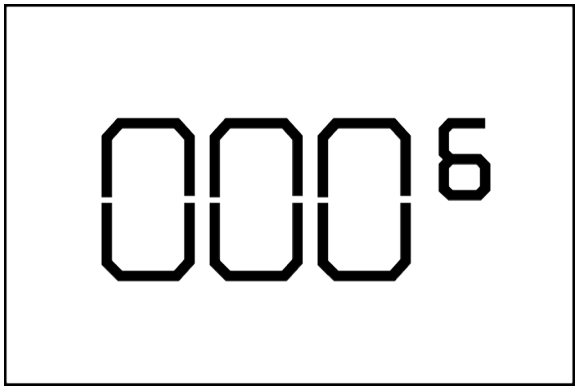

EQ002-095

Then the last saved setting appears in the display.

6.13.3 Setting cabin temperature

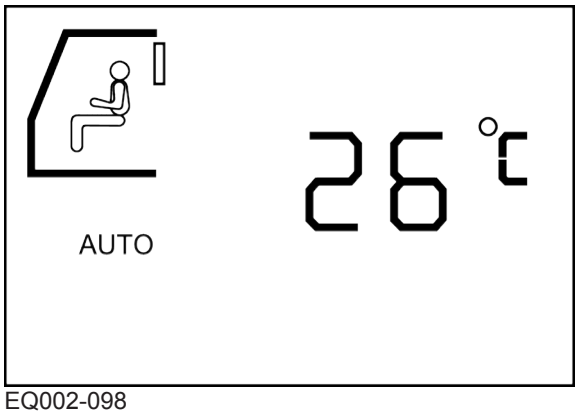

EQ002-098

The display shows the following information:

- The current cabin temperature in °C.
- That the control unit is in automatic mode (AUTO).

▶ To change the cabin temperature, gradually press or until the required value is shown on the display.

6.13.4 Switching air conditioning mode on/off

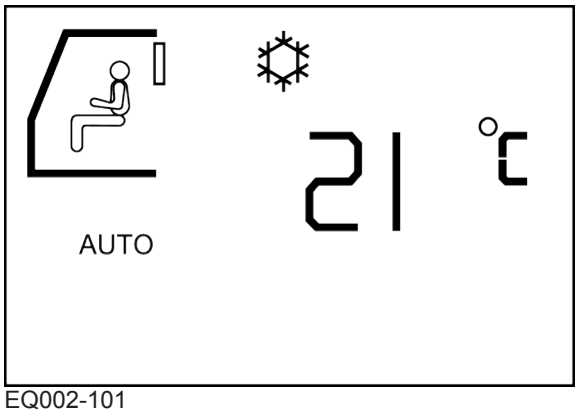

EQ002-101

▶ To switch on air conditioning mode, press .

➡ The icon is shown on the display. Air conditioning mode has been switched on.

➡ The compressor is turned on by the control unit if necessary.

▶ To switch off air conditioning mode, press .

➡ The icon goes out on the display. Air conditioning mode has been switched off.

➡ The compressor is switched off by the control unit.

6.13.5 Switching REHEAT mode on/off

During REHEAT mode the cabin air is dehumidified.

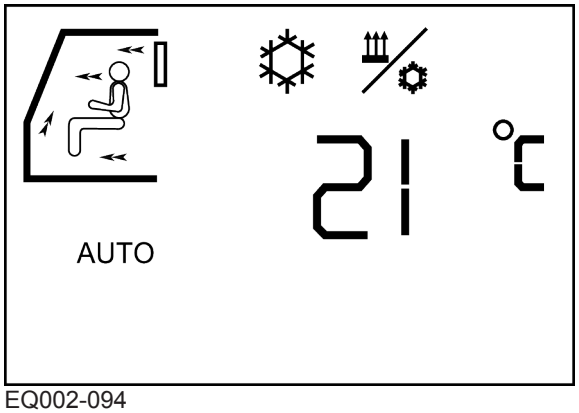

EQ002-094

▶ To switch on REHEAT mode, press .

➡ The icon is shown on the display. REHEAT mode has been switched on.

In REHEAT mode

- the compressor is permanently switched on,
- the rotational speed of the evaporator fan can be manually adjusted further,
- the control unit switches on the heater as required to keep the room temperature at the setpoint value.

REHEAT mode is automatically limited to 60 minutes.

▶ To switch off REHEAT mode, press .

➡ The icon goes out on the display. REHEAT mode has been switched off.

6.13.6 Manually setting the evaporator fan speed

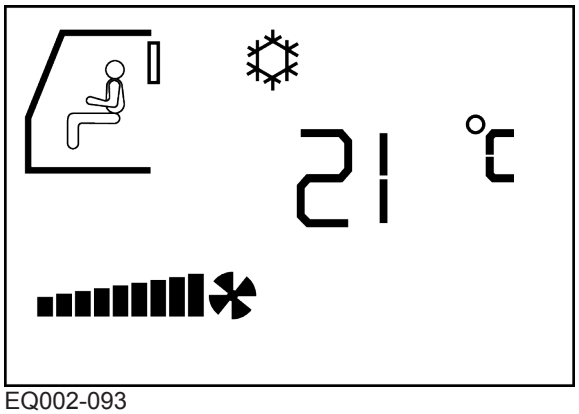

EQ002-093

- ▶ To switch on the manual setting of the rotational speed of the evaporator fan, press.
- ➡ The manual setting of the rotational speed of the evaporator fan is active.
- ➡ The bargraph shows the currently set fan speed (full bargraph = 100%).
- ➡ The AUTO icon goes out on the display. AUTO mode has been switched off.
- ➡ The icon flashes for 5 s.

During this period the fan speed can be increased or reduced in 10% steps.

- ▶ To increase the fan speed, press .
- ▶ To reduce the fan speed, press .

INFORMATION
The lowest adjustable fan speed is 30% (three bars are displayed).

- ▶ To activate AUTO mode, press twice.
- ➡ The AUTO icon is shown on the display. AUTO mode has been switched on.
- ➡ The and icons are no longer displayed.

6.13.7 Switching temperature display between degrees Celsius and degrees Fahrenheit

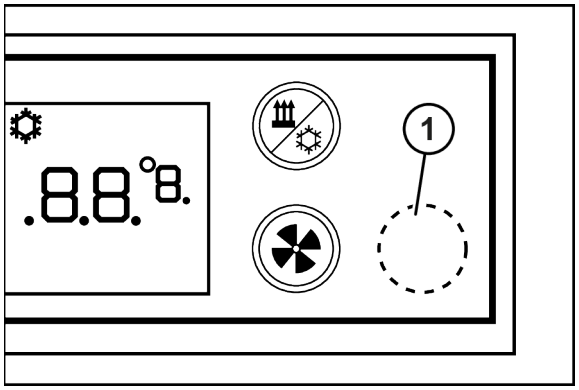

EQ002-092

▶ To switch the temperature display between degrees Celsius and degrees Fahrenheit, hold down the concealed key (1) and also press the key.

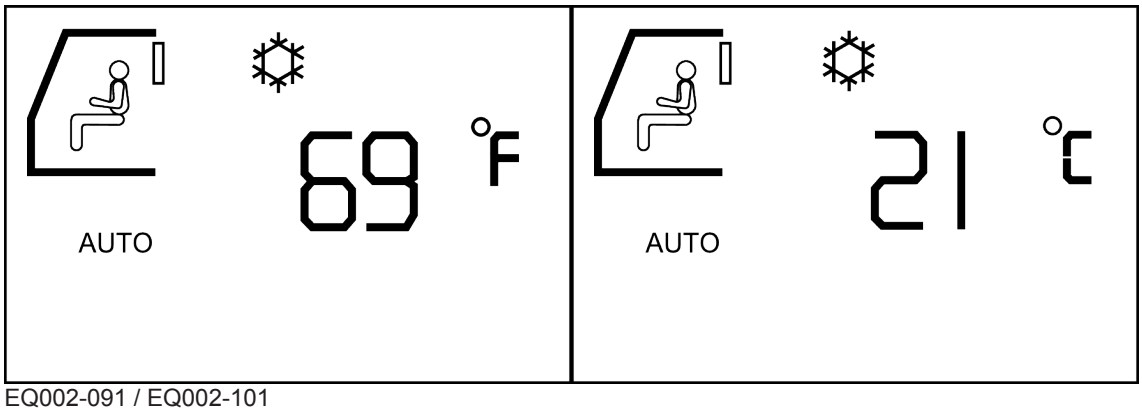

EQ002-091 / EQ002-101

➡ The temperature display switches to the other temperature unit.

6.13.8 Malfunctions indicated on display

Error code (F0)

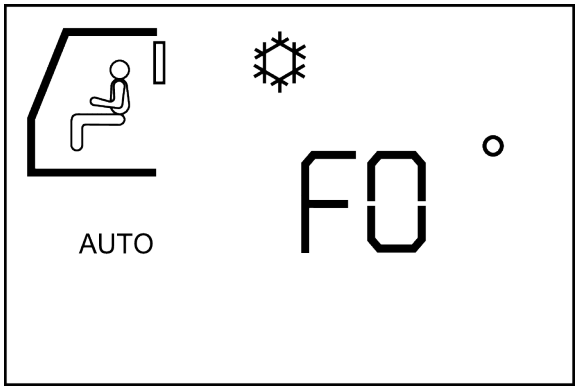

EQ002-099

A defective ambient temperature sensor is displayed by the flashing display (F0):

- The control unit has recorded an error in the room temperature sensor. Controller is no longer ready for operation.

> ***INFORMATION***
>
> In case of an error, the climate control continues working with the setting that was valid before the fault was recorded.

Possible causes of fault:

- Short circuit or discontinuance of sensor line.
- The plug connection on sensor or control unit temperature sensor is defective.

After the error has been eliminated, the climate control is ready for operation again.

The fault is no longer displayed.

Error code (F1)

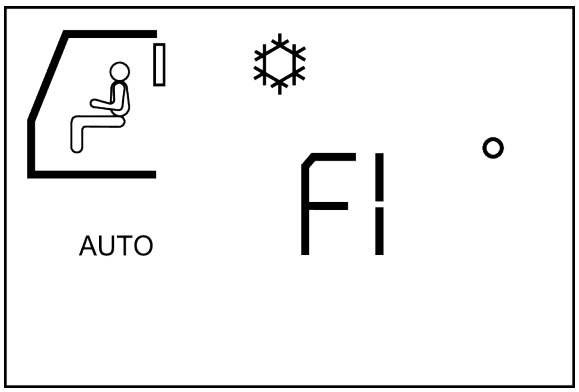

EQ002-100

Error in blow-out temperature sensor is indicated by flashing indicator (F1):

- The control unit has recorded an error of blow-out temperature sensor, the control is no longer ready for operation.

> ***INFORMATION***
>
> In case of an error, the climate control continues working with the setting that was valid before the fault was recorded.

Possible causes of fault:

- Short circuit or discontinuance of sensor line.
- The plug connection on sensor or control unit temperature sensor is defective.

After the error has been eliminated, the climate control is ready for operation again.

The fault is no longer displayed.

6.14 Sockets

6.14.1 Cigarette lighter 12 V/24 V socket

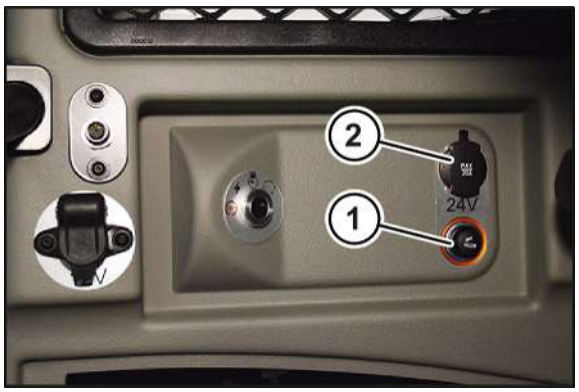

BX001-203

On the right side of the cabin next to the ignition lock are:

- Cigarette lighter (12 V) (1)
- Socket (24 V) (2)

⚠ *WARNING*

Risk of burns from the hot cigarette lighter

During operation the cigarette lighter generates such high temperatures that it may cause burns.

▶ Do not held the cigarette lighter (1) in the depressed position.

▶ Hold the hot cigarette lighter (1) by the handle only.

▶ Press in the cigarette lighter (12 V) (1) to heat it up:

➡ When the required lighter temperature has been reached, the cigarette lighter (12 V) (1) jumps back out automatically.

Electrical consumers with 24 V and maximum 15 A can be connected to the socket (24 V) (2).

If the diesel engine has been switched off, the battery will be discharged.

6.14.2 12 V sockets

BX001-204

Located on the right side of the cabin next to the ignition lock is the 3-pin 12 volt socket (15 A) (1).

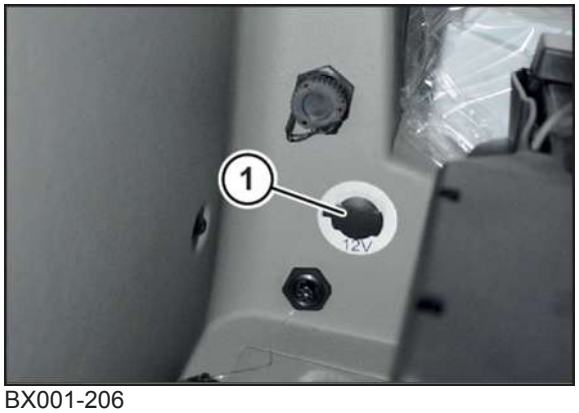

BX001-206

The 12 volt socket (1) is located behind the driver's seat.

6.14.3 Diagnostic socket ISOBUS/diagnostic socket KRONE

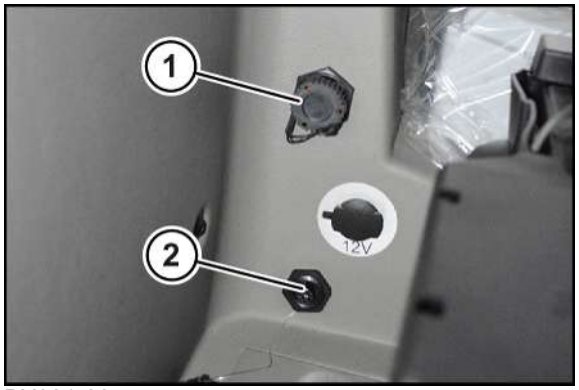

BX001-205

The following diagnostics interfaces are located behind the driver's seat:

- Diagnostics socket ISOBUS (1)
- Diagnostics socket KRONE (2)

▶ Ensure that only devices authorised by KRONE are connected to the diagnostics interfaces.

6.14.4 USB connection

BX001-207

The USB connection (1) is located in the right armrest.

6.15 Grinding control unit

The grinding control unit is located next to the platform at the front left side of the machine.

The grinding control unit can be used to perform a grinding process on the chopping blade and the lifting unit can be raised and lowered.

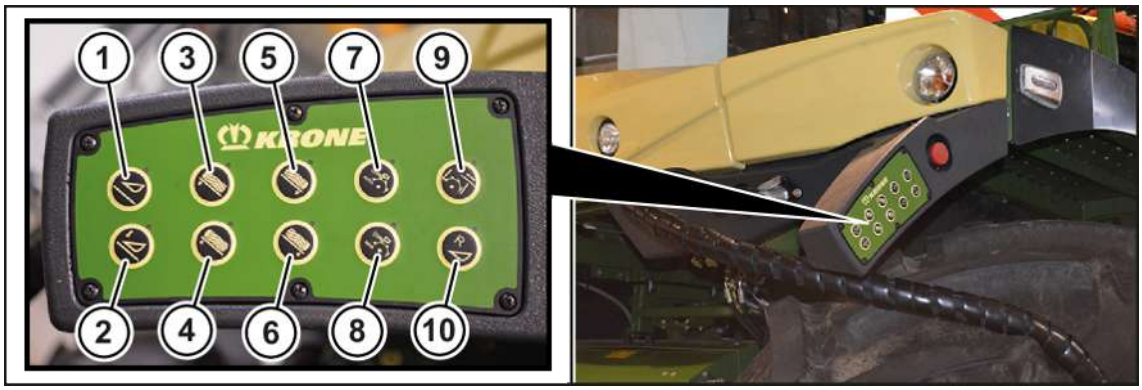

BX001-611

The keys on the control lever are used to run machine functions. The keys are assigned either to sensing mode, step mode or 2-stage operation. Depending on the particular key operating mode involved, there are 2 methods of running the machine functions:

- Sensing mode: The function is activated and completely run by tapping the key. The function is not stopped by releasing the key.
- Step mode: The function is run for as long as the key is pressed.

In the description below only the keys that are used for sensing mode are identified; all other keys are used for step mode.

Pos.	Designation	Explanation
1	"Raise lifting unit" key	Raises the lifting unit.
2	"Lower lifting unit" key	Lowers the lifting unit.
3	"Right counterblade towards" key	Moves the right counterblade towards the cutter drum.
4	"Right counterblade away" key	Moves the right counterblade away from the cutter drum.
5	"Left counterblade towards" key	Moves the left counterblade towards the cutter drum.
6	"Left counterblade away" key	Moves the left counterblade away from the cutter drum.
7	"Automatic grinding operation" key	Starts an automatic grinding process (sensing mode).
8	"Move grinding stone manually" key	Moves the grinding stone.
9	"Open/close grinding flap" key	Opens or closes the grinding flap (sensing mode).
10	"Reversing intake/header" key	Reverses the intake/header.

The functions of the grinding control unit are available for different switching-on conditions.

The following is generally applicable:

✓ The header is positioned fully on the ground.
✓ The machine has been safely parked, *refer to page 27*.

	Switching-on conditions	
Function	**Maintenance mode**	**Main coupling**
Raise lifting unit	on/off	on/off
Lower lifting unit	on/off	on/off
Counterblade towards right	on	on
Counterblade away from right	on	on/off
Counterblade towards left	on	on
Counterblade away from left	on	on/off
Automatic grinding operation	on	on
Move grinding stone manually	on	on
Open/close grinding flap	on	on/off
Reverse intake/header	off	on
Emergency reverse intake	off	off

6.16 Quick-stop switch grinding control unit

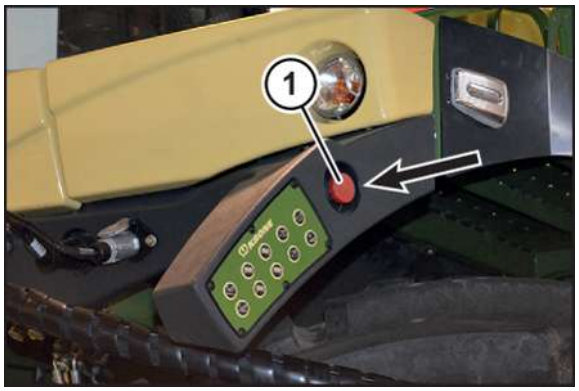

BX001-122

The quick-stop switch (1) on the grinding control unit is used to stop the working functions of the machine. The diesel engine and the traction drive continue running.

- ▶ To actuate it, press down the quick-stop switch (1) until it locks into position.
- ➡ The working functions are stopped. The switch is locked.

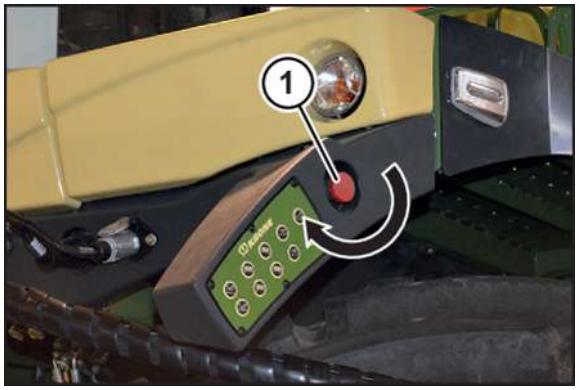

BX001-121

- ▶ To release it, turn the quick-stop switch (1) clockwise until the home position is reached.
- ➡ The working functions are activated. The switch is released.

6.17 Opening and closing side hoods and rear hood

⚠ WARNING

Risk of injury from moving machine parts

If the hoods for the engine compartment and crop flow are opened while the diesel engine is running, there is a risk of people being injured by moving machine parts.

- ▶ Do not open the side hoods and the rear hood until the diesel engine has stopped.
- ▶ Ensure that the side hoods and the rear hood are closed when starting the diesel engine.

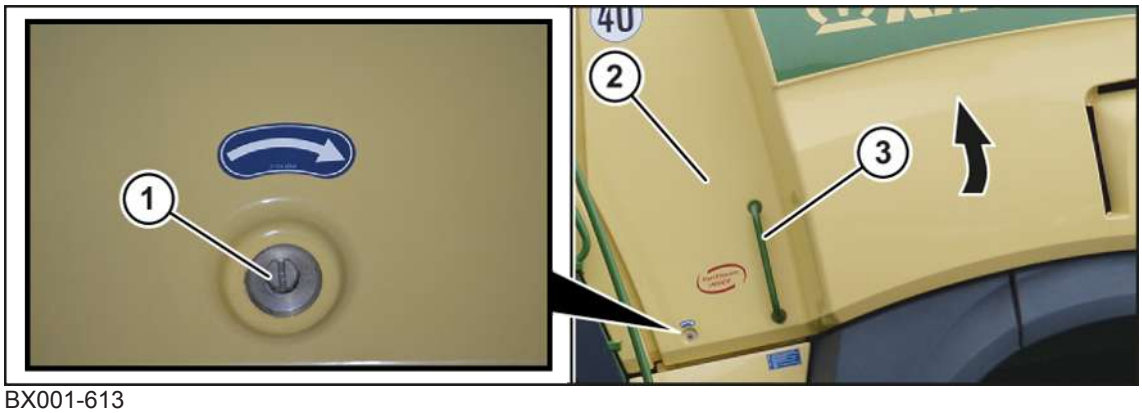

BX001-613

Opening the side hoods (2):

- ▶ Unlock the lock (1) using a spanner (WAF 13) or a flat head screwdriver in the direction of the arrow on the label.
- ▶ Grip the side hoods (2) by the handle (3) and open.

Closing the side hoods (2):

- ▶ Close the side hood (2) and press down without using a tool until the lock (1) closes.
- ▶ To ensure that the side hood (2) is locked, pull on the handle (3).

- ➡ If the side hood (2) cannot be opened, the side hood (2) is locked.
- ➡ If the side hood (2) can be opened, press down the side hood (2) again until the lock (1) closes.

BX001-895

Opening the rear hood (2):

- ▶ Unlock the lock (1) using a spanner (WAF 13) or a flat head screwdriver in the direction of the arrow on the label.
- ▶ Grip under the rear hood (2) and open the rear hood (2).

Closing the rear hood (2):

- ▶ Close the rear hood (2) and press down without using a tool until the lock (1) closes.
- ▶ To ensure that the rear hood (2) is locked, grip under the rear hood (2) and pull.
- ➡ If the rear hood (2) cannot be opened, the rear hood (2) is locked.
- ➡ If the rear hood (2) can be opened, press down the rear hood (2) again until the lock (1) closes.

7 Terminal

⚠ WARNING

Risk of injury to persons and damage to machines if error messages are ignored

If error messages are ignored without the fault being rectified injuries may occur to persons and/or severe damage to the machine.

- ▶ Rectify fault if error message is shown.
- ▶ If the fault cannot be rectified, contact KRONE service partner.

INFORMATION

The working screens and menus in the following chapters show all possible machine versions. Therefore, the working screen and the menus on the terminal of your machine may differ.

7.1 Display design

EQG002-015

Pos.	Designation	Explanation
1	Display	Touch display and input interface on the terminal.
2	Buzzer	Reproduces acoustic warning signals.
3	"On/Off" key	Switches the display on/off. **As the terminal is switched on and off via the ignition, do not press the "On/Off" key until the terminal does not respond when the ignition is switched on/off.**
4	"Display brighter" key	Increases the brightness of the display
5	"Display darker" key	Reduces the brightness of the display

Pos.	Designation	Explanation
6	Status LED	Blue: The display has been switched off, the machine is running or the ignition has been switched on.
		Yellow: The terminal starts up (boots up) or shuts down.
		Green: The terminal is switched on and is running in normal mode.
		Off: The terminal and the ignition have been switched off.
7	Not assigned.	

7.2 Description display

EQG002-014

The display is used for displaying and entering data. It provides information about the current operating status of the machine. Settings can be made and different functions can be run.

To provide menu guidance and entry of values/data, the terminal is equipped with a touch-capable display. Touching the display enables you to call up and change values.

NOTICE
Operate the display only with your finger tips to avoid damaging the surface. Never use a pen, pencil or other pointed objects.

- ▶ To run a specific function, press the appropriate key on the display.
- ▶ To change a value quicker, press the respective key for more than 2 seconds.
- ▶ To scroll in selection windows, drag a finger over the display.

7.3 Navigation module

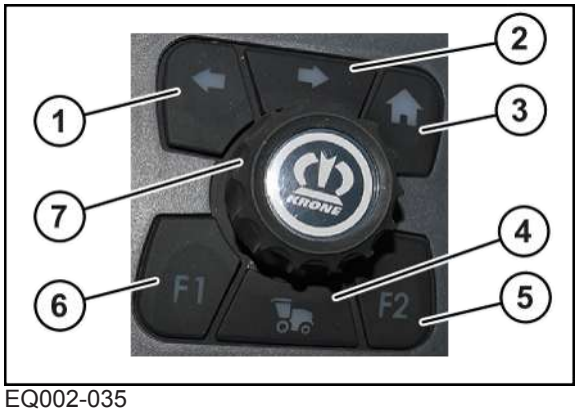

EQ002-035

The function keys (1–6) of the navigation module provide direct access to the most important keys on the display.

The navigation scroll wheel (7) can be used to select the keys on the terminal, make settings on the machine and start and stop functions.

Description of the keys

Pos.	Icon	Designation	Explanation
1		"Step back" key	Goes back one input step.
2		"Step forwards" key	Goes forwards one input step.
3		"Home" key	Switches to the working screen "Road mode" or "Field mode".
4		"Main menu" key	Opens the main menu.
5	F2	"F2" key	Not assigned.
6	F1	"F1" key	Not assigned.
7		Navigation scroll wheel	Navigates on the display.

"Navigation scroll wheel" function

BXG000-055

Besides inputting data through the touch display, the navigation scroll wheel can also be used to navigate on the terminal and change numerical values.

To do this, the "navigation scroll wheel" can be pressed, rotated and slid to the side.

Navigating on the terminal

- Turning: Changes the selection of keys on the terminal in the direction of rotation. The selected key has a yellow border.
- Pushing: Changes the selection of keys on the terminal in the sliding direction. The selected key has a yellow border.
- Pressing: Actuates the selected key.

Changing an adjustable numerical value

▶ To navigate to the required adjustable value, rotate or slide the "navigation scroll wheel" (1).

➡ The selected key has a yellow border.

▶ To switch the adjustable value to input mode, press the "navigation scroll wheel" (1).

➡ The key has an orange background.

▶ To change the value, rotate the "navigation scroll wheel" (1).

▶ To save the adjusted value, press the "navigation scroll wheel" (1).

7.4 Input window

If a parameter with a numerical value is selected in a menu, an input window opens. The input window can be used to enter and then to release a new setpoint value for the parameter via a keypad.

EQG000-008

Operate input window

EQG002-061

Pos.	Icon	Designation	Explanation
1		Cancel	Cancels the entry and closes the input window without saving the entry.
2		Save	Saves the entered value and closes the input window.
3		Value	Indicates the currently saved or newly entered value, in this example the value 50%.
4		Delete last digit	Deletes the last digit of the value.
5	CLR	Delete value	Deletes the input value.
6	Default 50	Standard value (example)	Sets the value to the preset standard value (in this example the value 50).
7	.	Point	Inputs a decimal point.
8	0 - 9	Keys "0" to "9"	Input the numerical values 0 to 9.
9	±	Plus/minus	Switches the algebraic sign of the value.

Pos.	Icon	Designation	Explanation
10	-100	-100 (example)	• Each time the key is pressed, the current value is increased or reduced by the indicated value. • If the key is pressed and held down, the value changes continuously by the indicated value.
11	-10	-10 (example)	
12	+10	+10 (example)	
13	+100	+100 (example)	
14		Minimum/maximum value	Indicates the minimum and maximum value of the parameter.
15		Parameter designation	Indicates the parameter designation, in this example "sensitivity".

If a value is input which is less than the minimum value, the value cannot be saved and the minimum value (14) is shown in red.

If a value is input which is greater than the maximum value, the value cannot be saved and the maximum value (14) is shown in red.

▶ Input the required value via the keys (7, 8, 9, 10, 11, 12, 13).

⇨ The value appears in the "Value" display range (3).

▶ To save the entered value, press  .

7.5 Selection window

If there are several selection options for an input field, a corresponding selection window opens.

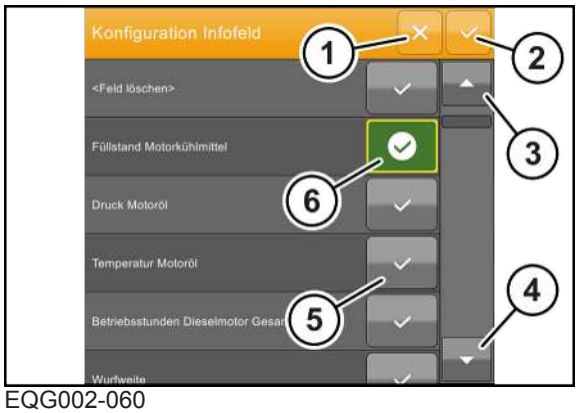

EQG002-060

Pos.	Icon	Designation	Explanation
1		Cancel	Cancels the entry and closes the selection window without saving the entry.
2		Save	Saves the entered value and closes the selection window.
3		Up	Moves the slide controller upwards.

Pos.	Icon	Designation	Explanation
4		Down	Moves the slide controller downwards.
5		Current selection	Indicates the selection made or the saved setting.
6		Possible selection	Can be selected.

- To choose the required setting, press .
  - ⇨ The chosen selection is highlighted with .
- To save the chosen selection, press .

8 Terminal machine functions

⚠ WARNING

Risk of injury to persons and damage to machines if error messages are ignored

If error messages are ignored without the fault being rectified injuries may occur to persons and/or severe damage to the machine.

- ▶ Rectify fault if error message is shown.
- ▶ If the fault cannot be rectified, contact KRONE service partner.

EQG002-011

After switching on the ignition the working screen "Road mode" or the working screen "Field mode" is opened in the main window, depending on the position of the Main Mode Switch.

- The working screen "Road mode" shows the most-important engine and driving data.
- The working screen "Field mode" shows information about the field mode. Several settings for the field mode can be made when in the working screen.

The working screen is divided up into the following display ranges:

Pos.	Designation	Explanation
1	Status line	Shows the current states of the machine, *refer to page 126*.
2	Malfunction warning panel	Indicates error states of malfunctions. Is only visible when malfunctions occur, *refer to page 131*.
3	Title bar	Keys for counter menu, error menu and main menu, *refer to page 136*.
4	Direct input field mode	Keys for direct input of the most important settings in field mode (on "Field mode" working screen only), *refer to page 150*.
5	Information section	Freely assignable keys, *refer to page 153*
6	Engine and driving data	Indicates current fuel levels, engine and traction drive data, *refer to page 154*.

8.1 Status line

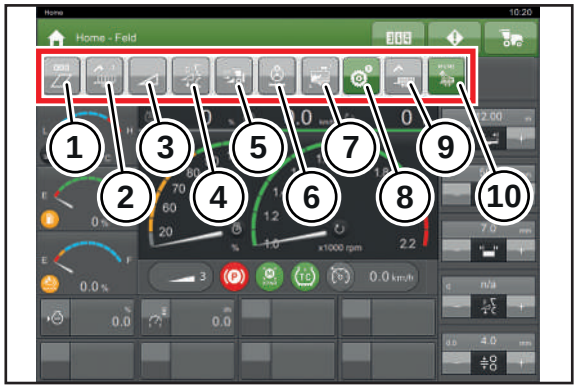

EQG002-044

The keys in the status line display the current status of the corresponding parts via colours and icons.

The status line only displays keys for the functions which are installed on the machine or released. This means that the status line could also include a smaller number of keys.

(1) Surface counter

Icon	Explanation
	The customer counter is inactive.
	The customer counter is active.
	The surface counter is active.

When a key is pressed, the "Counter" menu opens, *refer to page 136*.

(2) CropControl (optional)

Icon	Explanation
	No counterweighing has been performed.
	The counterweighing is completed (after entering the value of the counterweighing).
	Counterweighing has started.
	Counterweighing has stopped.

When a key is pressed, the CropControl "Counterweighing" menu opens.

(3) Header

Icon	Explanation
	The header is inactive.
	The header is active.
	The header is active and reversed.

When a key is pressed, the header "Settings" menu opens, *refer to page 180*.

(4) Lifting unit control

Icon	Explanation
	The lifting unit bearing pressure control is inactive.
	The lifting unit bearing pressure control is active. The control regulates the pressure of header on the ground to a constant value.
	The lifting unit distance control is inactive.
	The lifting unit distance control is active. The control constantly sets the height of the header relative to the ground (optional, only in conjunction with attached ground contour sensor system).
	The lifting unit position control is currently inactive.
	The lifting unit position control is active. The control constantly adjusts the height of header relative to the machine.

If a key is pressed, the "Calibration" sub-menu of the "Lifting Unit" menu opens, *refer to page 184*.

(5) Foreign object detection

The foreign object detection key shows the status of metal detection and of RockProtect (for the "RockProtect" design).

Icon	Explanation
	The metal detection or RockProtect (for "RockProtect" version) are not available.
	The metal detection and RockProtect (for "RockProtect" version) are active.
	The metal detection detected metal in the intake or RockProtect (for the "RockProtect" version) detected a stone in the intake. The intake stops abruptly.
	The metal detection or RockProtect (for "RockProtect" version) are inactive. The intake continues to run if the metal detection detects metal in the intake of if RockProtect detects a rock in the intake.

When a key is pressed, the foreign object detection "Settings" menu opens.

(6) Automatic steering system (option)

Icon	Explanation
	ISOBUS automatic steering system is inactive.
	ISOBUS automatic steering system is ready. The automatic steering system is ready when the associated release switches have been actuated.
	ISOBUS automatic steering system is active. The automatic steering system is ready when the associated release switches and the "Automatic steering system" key have been actuated.
	Row tracer automatic steering system is inactive.
	Row tracer automatic steering system is ready. The automatic steering system is ready when the associated release switches have been actuated.
	Row tracer automatic steering system is active. The automatic steering system is ready when the associated release switches and the "Automatic steering system" key have been actuated.

When a key is pressed, the automatic steering system "Settings" menu opens, *refer to page 205*.

(7) Silage additives unit

The silage additives unit key shows the status of the external silage additives unit, the silage additives unit fine dosing or the silage additives unit coarse dosing if one or more of these silage additives units are attached.

If only one silage additives unit is attached, the key for this silage additives unit is shown on the status line.

Icon	Explanation
	The attached silage additives units are inactive
	The attached silage additives units are active are in automatic mode
	External silage additives unit is inactive.
	External silage additives unit is permanently active
	Automatic mode switched off, external silage additives unit is inactive
	Automatic mode switched on, external silage additives unit is active
	Silage additives unit fine dosing is inactive
	Silage additives unit fine dosing is permanently active
	Automatic mode switched on, silage additives unit fine dosing is inactive
	Automatic mode switched on, silage additives unit fine dosing is active
	Silage additives unit coarse dosing is inactive
	Silage additives unit coarse dosing is permanently active
	Automatic mode switched on, silage additives unit coarse dosing is inactive
	Automatic mode switched on, silage additives unit coarse dosing is active

When a key is pressed, the "Silage additives unit" menu opens.

(8) VariLOC chop length gearbox

Icon	Explanation
	VariLOC chop length gearbox transmission ratio 1:1
	VariLOC chop length gearbox transmission ratio 1:1.5
	Transmission ratio cannot be specified

(9) Auto-loading system

Symbol	Explanation
	The auto-loading system is deactivated.
	The auto-loading system is inactive, no transport vehicle was detected. The spout must be manually controlled.
	The auto-loading system is inactive, a transport vehicle was detected. Activation is possible.
	The auto-loading system is active. The transport vehicle is being filled.
	The auto-loading system is active. The transport vehicle is full.
	The auto-loading system is active. No transport vehicle was detected. As soon as a transport vehicle is detected, the auto-loading system takes over filling of the transport vehicle.

(10) Assignment of control lever keys M1 and M2

Icon	Explanation
	Key assignment M1 and M2 inactive
	Maize header: Raise/lower plant divider
	Grass header: Raise/lower holding-down clamp
	Increase/reduce working width
	Change saved chop length
	Increase/reduce header speed
	Turn pendulum frame left/right

Icon	Explanation
	Increase/reduce discharge distance of the discharge accelerator (for "StreamControl" version)
	Raise/lower spout
	Warning beacon (optional) /horn on
	Raise/lower hitch attachment (for version with "additional double-acting hydraulic connection at rear")
	Raise/lower hopper (for version with "Additional double-acting hydraulic connection at rear")
	Activate/deactivate auto-loading system (for "Auto-loading system" version)

When a key is pressed, the Control lever menu "Settings" opens, *refer to page 171*.

8.2 Malfunctions indicated on malfunction warning panel


EQG002-021

The following warnings and faults may appear in the “Malfunction warning panel” display range:

Icon	Designation	Explanation
	Exhaust aftertreatment system warning light	Shows the status of the exhaust aftertreatment system.
	Indicator lamp torque reduction	Indicates that the diesel engine torque is being reduced
	Yellow engine warning light	The engine electronics have detected a fault with the engine.
	Red engine warning light	The engine electronics have detected a serious fault with the engine. ▶ Immediately stop the engine and eliminate the fault.

Icon	Designation	Explanation
	Indicator lamp intermediate gear-box lubrication	In addition, a horn sounds for 5 s and the prompt to stop the machine and to immediately switch off the main coupling appears in an error dialogue window.
	Indicator lamp Restricted opera-tion	If the control electronics establish a fault with the traction drive, the speed of the machine is limited to 0 to 20 km/h depending on the severity of the fault.
	Indicator lamp frost protection mode	Frost protection mode is activated when the am-bient temperature and the engine coolant temper-ature fall below a defined limit. In frost protection mode, the engine speed is limited. A progress bar below the indicator lamp shows for how long the frost protection will continue to be active.

The warning lights on the malfunction warning panel are not visible unless the electronics detect a fault on the exhaust aftertreatment system, the engine or on the traction drive.

The warning lights are visible on all screens on the terminal, i.e. also in the main menu and the menus.

8.2.1 Warning lights - Filling level urea tank

If the status of the warning lights changes, an acoustic warning signal is emitted.

The combinations listed in the table of status display of warning lights display the drop in the filling level in the urea tank as a percentage.

Light for the urea display	Status of the indicator lamps				Explanation
 on	 off	 off	 off	 off	20% ≥ urea tank filling level > 10%
 on	 on	 off	 off	 off	10% ≥ urea tank filling level > 7.5% • 1. Warning
 on	 flashing	 on	 off	 off	7.5% ≥ urea tank filling level > 5% • The available torque is reduced to 75% of the maximum torque.

Light for the urea display	Status of the indicator lamps				Explanation
on	flashing	flashing	off	off	5% ≥ urea tank filling level > 2.5% • The available torque is reduced to 50% of the maximum torque. • The maximum rotational speed has been reduced to 60 %.
on	flashing	flashing	off	on	2.5% ≥ urea tank filling level > 0% • The available torque is reduced from 50% to 20% of the maximum torque. • The maximum rotational speed is reduced from 60% to idle speed.
flashing	flashing	flashing	off	flashing	Urea tank filling level = 0% • The available torque is reduced to 20% of the maximum torque. • The rotational speed has been reduced to idle speed.

▶ To reach full engine performance and driving speed again, fill an adequate amount of urea in the specified quantity into the urea tank.

8.2.2 Warning lights - urea quality

If the status of the warning lights changes, an acoustic warning signal is emitted.

The combinations of warning light status displays listed in the table indicate that the quality of the urea in the urea tank does not match the prescribed quality:

Light for the urea display	Status of warning lights				Explanation
off	on	off	off	off	After an unacceptable urea quality was detected. • 1. Warning
off	flashing	on	off	off	After 60 min engine running time after the unacceptable urea quality was detected. • The available torque is reduced to 75 % of the maximum torque.
off	flashing	flashing	off	off	After 180 min engine running time after the unacceptable urea quality was detected. • The available torque is reduced to 50 % of the maximum torque. • The maximum rotational speed is reduced to 60 %.
on	flashing	flashing	off	on	After 230 min engine running time after the unacceptable urea quality was detected. • The available torque is reduced from 50 % to 20 % of the maximum torque. • The maximum rotational speed is reduced from 60 % to idle speed.
off	flashing	flashing	off	flashing	After 240 min engine running time after the unacceptable urea quality was detected. • The available torque is reduced to 20 % of the maximum torque. • The speed is reduced to idle speed.

▶ To reach full engine performance and driving speed again, fill an adequate amount of urea in the specified quantity into the urea tank.

8.2.3 Indicator lamps – urea system defective or tampered with

If the status of the warning lights changes, an acoustic warning signal is emitted.

The combinations of status displays of the indicator lamps listed in the table indicate that the urea system is defective or has been tampered with.

Light for the urea display	Status of the indicator lamps				Explanation
off	on	off	on	off	After it was detected that the urea system was defective or tampered with. • 1. Warning
off	flashing	on	on	off	After 60 min engine running time after the error was detected. • The available torque is reduced to 75% of the maximum torque.
off	flashing	flashing	on	off	After 180 min engine running time after the error was detected. • The available torque is reduced to 50% of the maximum torque. • The maximum rotational speed has been reduced to 60%.
off	flashing	flashing	on	on	After 230 min engine running time after the error was detected. • The available torque is reduced from 50% to 20% of the maximum torque. • The maximum rotational speed is reduced from 60% to idle speed.
off	flashing	flashing	on	flashing	After 240 min engine running time after the error was detected. • The available torque is reduced to 20% of the maximum torque. • The rotational speed has been reduced to idle speed.

The following errors and attempts to tamper with the urea system will cause a reduction in the speed and torque:

- The "Urea amount" sensor short-circuits the supply voltage.
- The "Urea amount" sensor causes a short-circuit to ground.
- The urea pump is blocked.
- The urea tank contents curve is not selected.
- The "Dosing valve" signal causes a short-circuit to ground.
- The "Dosing valve" signal short-circuits the supply voltage.
- The "Dosing valve" signal indicates a cable break.
- The High side switch 1 pump/heating has a short circuit to ground.
- The High side switch 2 pump/heating has a short circuit to ground.
- The battery voltage is below the permitted operating range.
- The battery voltage is above the permitted operating range.
- There is an internal error in the control unit.
- The urea dosing unit has not cooled down.
- The urea dosing unit is defective.

▶ To reach full engine performance and driving speed again, localise and eliminate the error.

8.3 Keys in the title bar

EQG002-022

Icon	Designation	Explanation
	"Counter" menu	Opens the "Counter" menu.
	"Error" menu	Opens the "Error" menu.
	Main menu	Opens the main menu.

8.3.1 “Counters” menu

EQ002-111 / EQ002-112

Current machine data can be retrieved via sub-menus in the “Counters” menu.

✓ The working screen is active.

▶ To open the menu, press .

➡ The display shows the “Counters” menu with its sub-menus.

“Customer Counter” menu

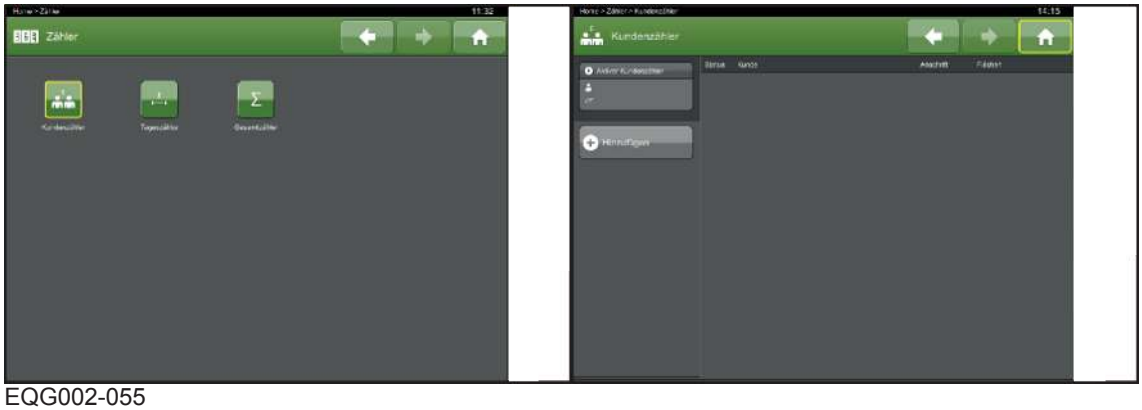

EQG002-055

Customer records can be created in the “Customer Counter” menu.

✓ The “Counters” menu is active.

▶ To open the menu, press  .

➡ The list with the created customers is displayed.

Creating customer data record

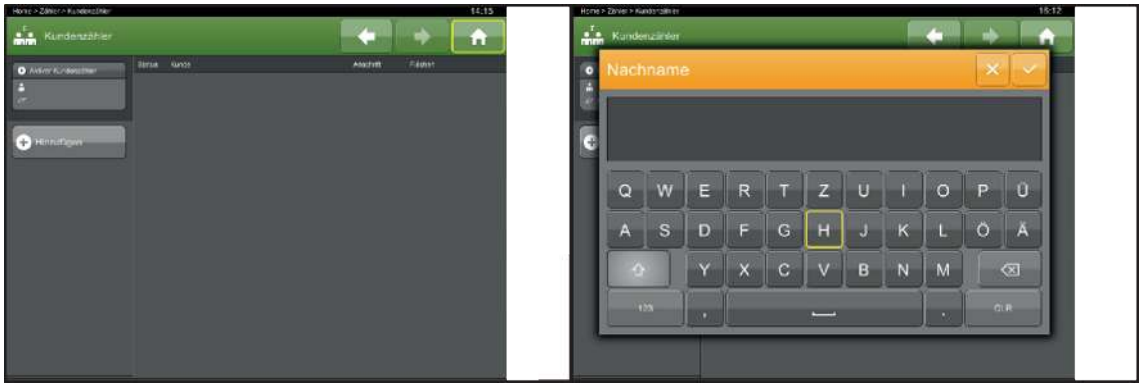

EQG002-056

▶ To create a customer data record, press 

.

⇨ The alphanumeric input field "Last name" opens.

▶ Enter or change the data of the customer in the alphanumeric input field.

Operation alphanumeric input field

- To change from capital letters to lower case letters and vice versa, press ⇧.
- Press 123 to change from alphabetical to numerical keyboard.
- To change from numerical to alphabetical keyboard, press ABC.
- Press #+= to enter special sign.
- To save the customer record, press ✓.
- To cancel the entry and keep the old setting, press ✕.


EQG003-027

- To enter more customer data, press .
  - ⇨ The menu with the input fields for the customer record is displayed.

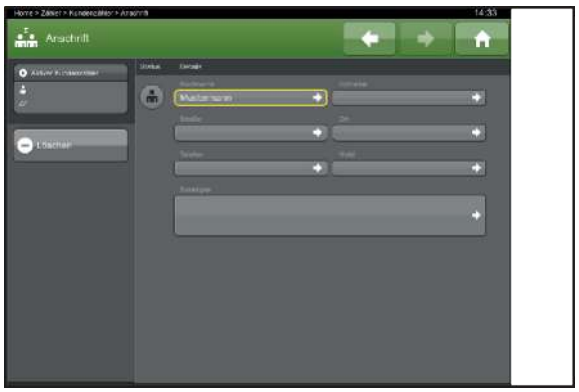
EQG003-029

- To enter the customer data, press the appropriate key.
- Enter the data via the alphanumeric input field.

EQG003-028

➡ The created customer data records are indicated in a list on the customer counter.

▶ To create another customer data record, press 

.

▶ To select a customer data record, press 
.

▶ To select the surface counter for a customer, press 
.

EQG003-032

➡ The display shows the "Surfaces" overview for the particular customer.

➡ One "Surface 01" is automatically created for each new customer.

Renaming surface

▶ To open the “Details surface” window, press  .

EQG003-020

▶ To rename a surface, press the corresponding key; in this example, press

.

➡ The alphanumeric input field opens.

▶ Rename the surface in the alphanumeric input field,*refer to page 138*.

▶ To delete the surface, press 

.

Creating a surface

EQG003-021

▶ To create a surface for the customer, press 

.

➡ The alphanumeric input field opens.

▶ Enter the name for the new surface in the alphanumeric input field, *refer to page 138*.

➡ The created surfaces are displayed in a table in the "Surfaces" window.

If several surfaces are created for a customer, a line with the total values for the created surfaces of the customer appears at the end of the table.

Deleting a surface

EQG002-074

- ▶ To delete one or more surfaces, press 

.
- ➡ A selection view opens.
- ▶ Select the surface or the surfaces that are to be deleted in the square at the end of the line.
- ▶ To delete the selected surfaces, press 

.

Starting and stopping surface counter

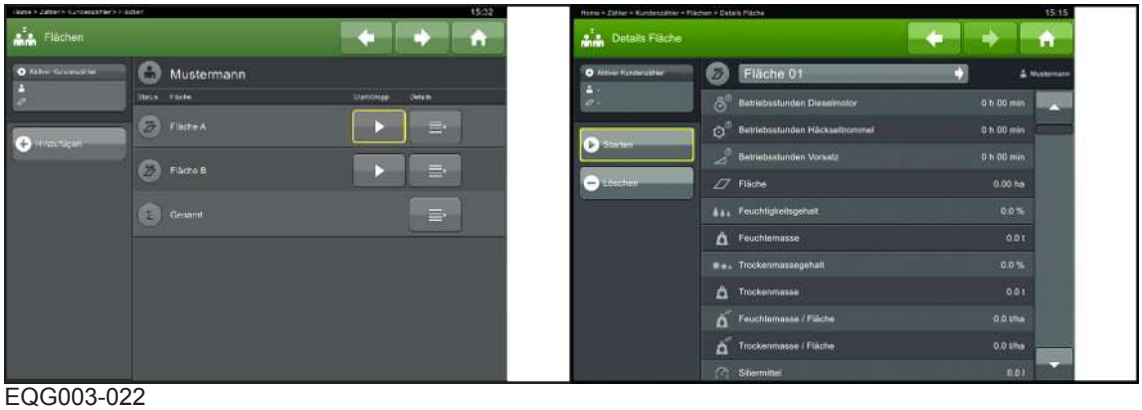

EQG003-022

- ▶ To start the counter for each surface, press  in the "Surfaces" window or 

in the "Surface details" window.
- ➡ The counter starts and records the surface data until the counter is stopped again.

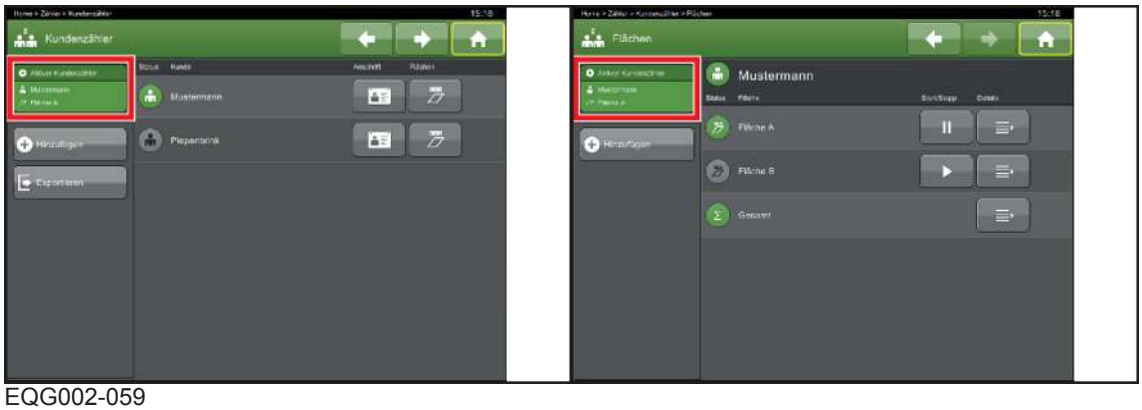

EQG002-059

- ➡ The currently recorded surface is shown in the "Customer counter" window and the "Surfaces" window in the "Active customer counter" area The icon for the surface and for the customer is highlighted in green
- ▶ To stop the counter, press  in the "Surfaces" window or 

in the "Surface details" screen.

> ***INFORMATION***
>
> If the key  
>
> is pressed for a surface, although the customer counter has been started for another surface, a direct change is made to the surfaces being recorded. In other words, the counter of the previously recorded surface is stopped and - at the same time - the counter for the other surface is started.

Viewing current surface data

The “Details surface” window displays the current surface data.

EQG003-020

Exporting customer data

EQG002-058

- Plug a USB flash drive into the USB port (1) in the right armrest.
- To export customer data to the USB flash drive, press Exportieren.

"Day counter" menu

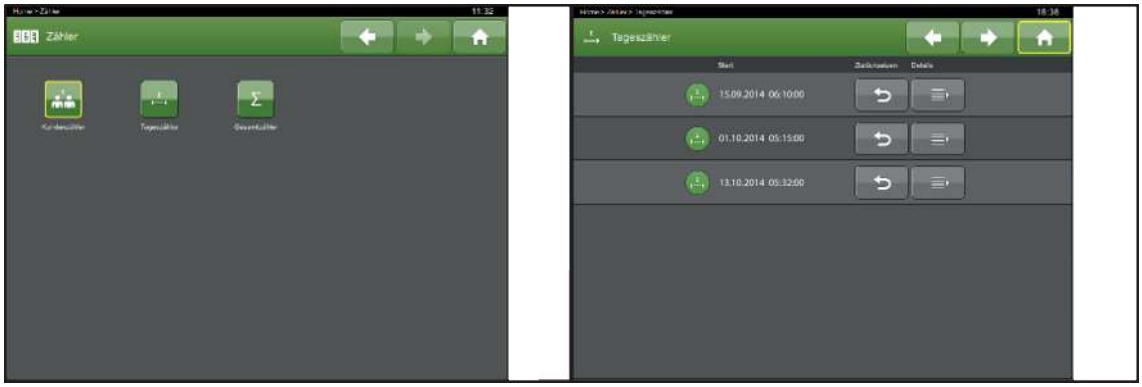

EQG003-024

✓ The "Counter" menu has been selected.

▶ To open the menu, press  .

➡ Three day counters are shown that permanently record the current work and consumption data for the machine for the three working periods currently running. The date and the time show when the day counters were last reset.

▶ To complete the work periods and to reset the day counter, press  .

▶ To select the values for a day counter in the corresponding line, press  .

➡ The "Day counter details" window is opened.

EQG003-023

The "Day counter details" window shows the current data for the selected work period:

- Diesel engine operating hours
- Fuel consumption
- Odometer (road, field, total)
- Surface counter
- Operating hours of chopping drum
- Operating hours with header

The work periods can be individually reset so that the counters each start counting the data again from 0

▶ To complete the work periods and to reset the day counter, press 
.

“Total Counter” menu

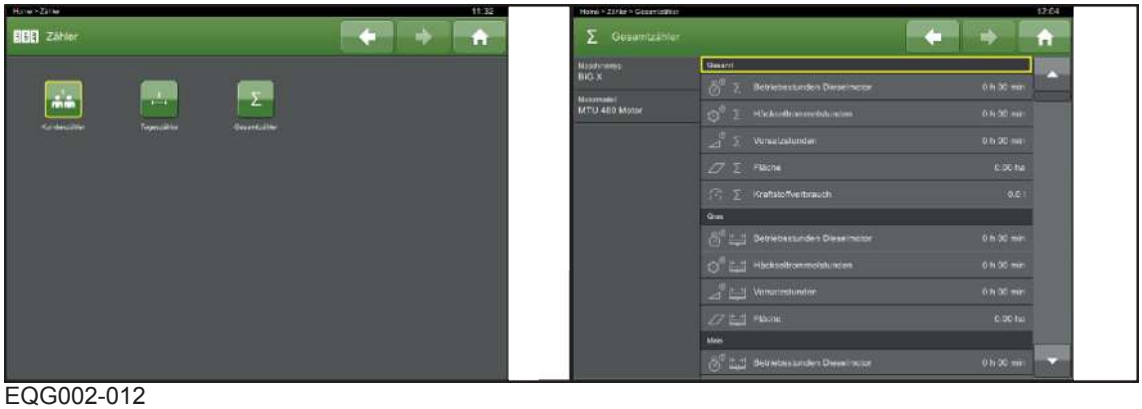

EQG002-012

✓ The “Counters” menu is active.

▶ To open the menu, press Σ.

➡ The current work and consumption data of the machine is displayed.

The following current data is displayed:

- Operating hours of diesel engine, total number and depending on header.
- Chopping drum hours, total number and depending on header.
- Header hours, total number and depending on header.
- Surface counter, total number and depending on header.
- Fuel consumption and total consumption.
- Odometer (road, field, total distance).

For the "CropControl" version

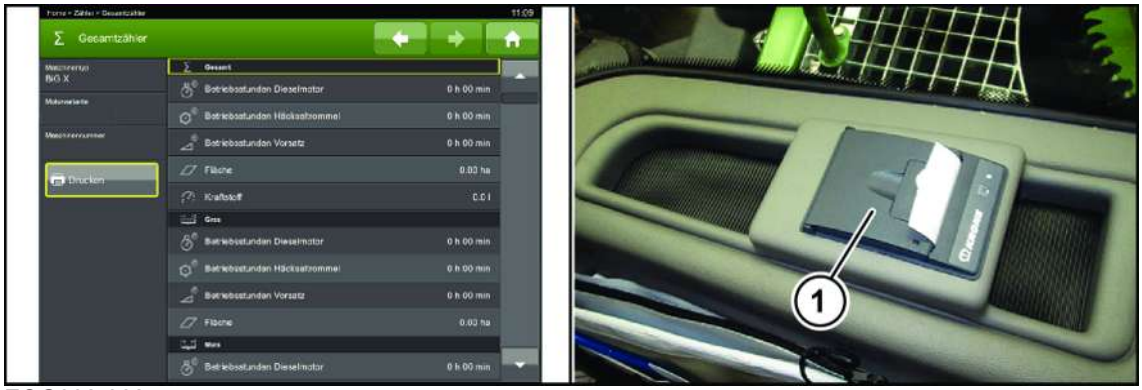

EQG002-062

The printer (1) can be used to print out customer, day or total counter.

▶ Select the counter which is to be printed out.

▶ To start printing, press Drucken.

8.3.2 “Error” menu

EQG002-024

✓ The working screen is active.

▶ To open the menu, press .

➡ The display shows the “Errors” menu with its sub-menus.

“Active Errors” menu

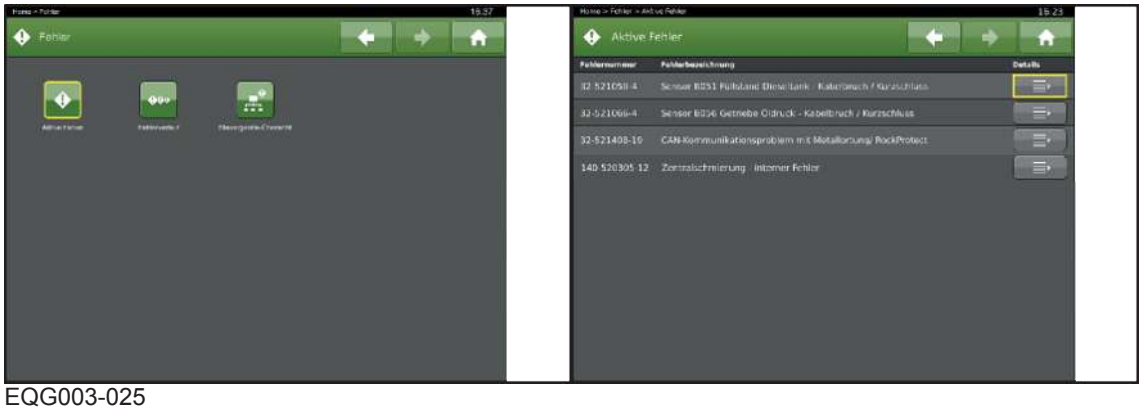

EQG003-025

✓ The “Errors” menu is active.

▶ To open the menu, press .

➡ The display shows the “Active Errors” menu with the active errors on the machine with error number and error designation.

▶ To call up information on an error, press next to the error message.

➡ The window for the error description is shown.

EQG003-026

1 Selected error number
2 Brief description of the error
3 Description of the error
4 "Close" key

▶ To close the error description, press .

"Error history" menu

The error history can be emptied by a service technician only.

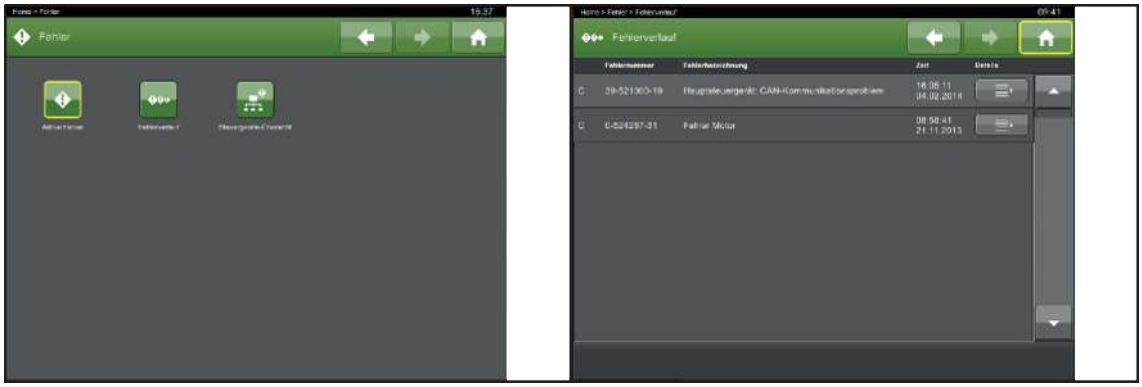

EQG003-090

✓ The "Error" menu appears.

▶ To open the menu, press .

➡ The display shows the "Error history" menu with error messages that have occurred since the error history was last cleared.

▶ To call up information on an error, press next to the error message.

➡ The window for the error description is shown.

EQG003-026

1 Selected error number
2 Brief description of the error
3 Description of the error
4 "Close" key

▶ To close the error description, press .

"Control units overview" menu

The "Control units overview" menu displays the control units of the machine on a diagram.

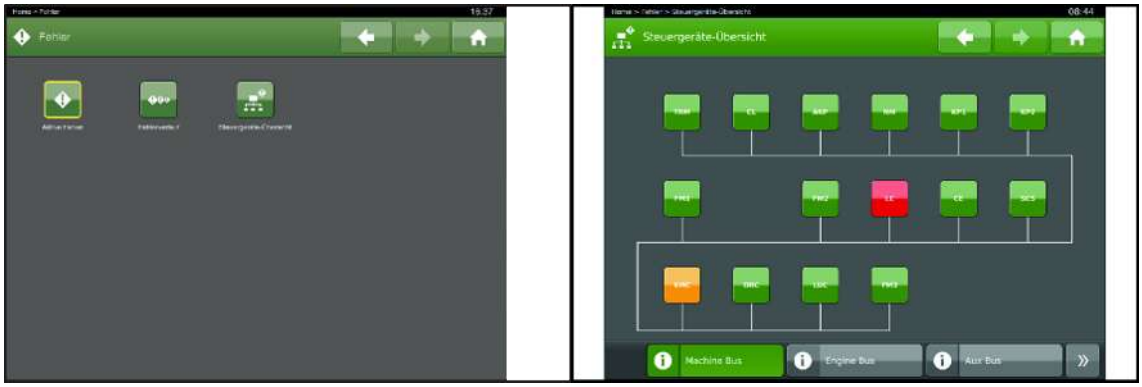

EQG002-048

▶ To open the 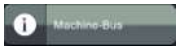 overview, press  .

The respective brief descriptions are on the squares for the control units.

The status of the individual control units is indicated by the colour of the squares.

Icon	Designation	Explanation
	Green square	CAN activity available, no errors
	Yellow square	CAN activity available, with one or more errors
	Red square	No CAN activity available, error can not be determined

▶ To open the overview of the control units of the engine bus, press  .

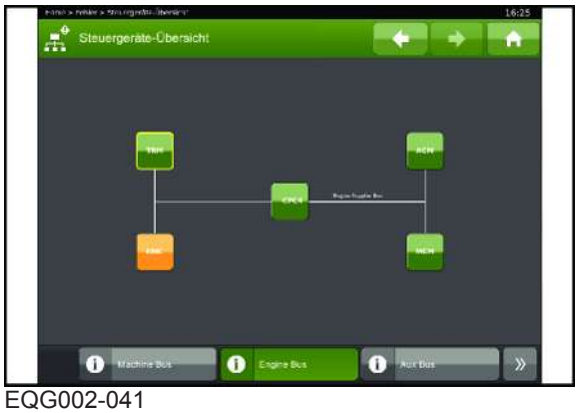

EQG002-041

▶ To open the overview of the control units of the AUX bus, press  .

EQG002-063

- To open the overview of the control units of the ISOBUS, first press » and then ISOBUS .

EQG002-042

- To call up information about a control unit, press the key on the respective control unit.

The associated information field is displayed.

EQG002-043

- To close the information field, press ✓ .

8.3.3 Main menu

EQG002-013

✓ The working screen has been selected.

▶ To open the main menu, press  .

For menu structure and to navigate in the menus, *refer to page 158*.

8.4 Direct input “Field mode”

EQG002-018

Pos.	Designation	Explanation
1	Temporarily change working width or number of rows.	Temporarily change the working width (grass mode) or number of rows (maize mode).
2	Changing the header speed	Reduce or increase the specified speed for the header drive.
3	Change chop length	Set the chop length manually or automatically with "AutoScan".
4	Change the lifting unit default value.	Reduce or increase the default value for regulating the lifting unit.
5	Change the corn conditioner roller distance.	Reduce or increase the default value for the corn conditioner roller distance (only for maize header).

The "Direct input field mode" can be used to make settings directly from the "Field mode" working screen without having to open the submenu.

To change the specified setting values, press  or  .

Pressing  reduces the set value:

- By a specified value each time the key is pressed.
- If the key is pressed and held down, the value is gradually reduced.
- If the key is held down for longer, the value is reduced more quickly.

Pressing  increases the set value:

- By a specified value each time the key is pressed.
- If the key is pressed and held down, the value is gradually increased.
- If the key is held down for longer, the value is increased more quickly.

8.4.1 Temporarily change working width or number of rows

The setting of the current working width is required to calculate the surface.

Depending on the header enabled in the parameters, the icon appears during direct input for the corresponding header and the enabled working width or the number of rows.

Grass mode

For the "EasyFlow" grass header and the "XDisc" direct cut header the working width in the upper field is in cm or inches (for the grass header the raked width).

Maize mode

For the "EasyCollect" and "XCollect" maize headers the number of set rows is in the upper field.

▶ To temporarily change the default value for the working width, *refer to page 150*.

➡ The change is immediately accepted and displayed as a temporarily changed value in the upper field. The area is calculated with the temporarily set default value.

INFORMATION

The value "Working width" or "Number of rows" in the season settings is not modified with this adjustment.

If the lifting unit is raised in the headland position, the parameter is reset to the value for the season settings.

8.4.2 Changing the header speed

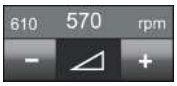

The upper field on the left indicates the actual value and in the centre is the setpoint value for the speed of the header drive in rpm.

▶ To temporarily change the default value for the rotational speed, *refer to page 150*.

➡ The change is immediately accepted and displayed on the left in the upper field.

8.4.3 Change chop length

Depending on the selected setting for the chop length (manually or via AutoScan), the icon for the corresponding chop length setting appears during direct input.

Manual setting

The upper field indicates the value for the chop length in mm or inches.

The default value for the chop length can be adjusted depending on the number of blades on the cutting drum and the diesel engine type.

The adjustment range with the minimum and maximum chop length in mm can be found in the following table.

Number of blades	Minimum chop length	Maximum chop length
10	10.5 mm	62.7 mm
14	7.5 mm	44.8 mm
18	5.8 mm	34.8 mm
20	5.2 mm	31.4 mm
28	3.7 mm	22.4 mm
36	2.9 mm	17.4 mm
40	2.5 mm	15 mm

▶ To temporarily change the default value for the chop length, *refer to page 150*.

➡ The change is immediately accepted and displayed on the left in the upper field.

Setting via "AutoScan"

The default value for the chop length is continuously modified automatically depending on the degree of maturity of the maize with the setting via the "AutoScan" system.

▶ To switch from the setting via the "AutoScan" system to the manual setting, press  or  .

8.4.4 Changing the lifting unit control default value

Depending on the lifting unit control set in the parameters, the corresponding icon appears during direct input. The actual value (top left) and the setpoint value (top centre) for the lifting unit control is displayed in %.

Lifting unit bearing pressure control

The lifting unit ground pressure control regulates via control the pressure of header on the ground to a constant value.

- The setpoint value is stated as a percentage of the header dead weight.
  For grass mode, the value can be set between -25 % (header sways over the ground) and 50 % (header presses with 50 % of its dead weight on the ground).
  For maize mode, the value can be set between -25 % (header sways above the ground) and 25 % (header presses with 25 % of its dead weight on the ground).

Lifting unit position control

When the lifting unit position control is active, the control regulates the height of the header to a constant value relative to the machine.

Lifting unit distance control

Via the control, the lifting unit distance control constantly regulates the header height relative to the ground (only in connection with mounted ground tracers).

- ▶ To temporarily change the default value for the lifting unit control, *refer to page 150*.
- ➡ The change is immediately accepted and displayed on the left in the upper field.

8.4.5 Changing Corn Conditioner Roller Distance

(Only for maize header)

> ***INFORMATION***
>
> The direct input “Change corn conditioner roller distance” is only active when corn conditioner is mounted.

The upper field on the left indicates the actual value and in the centre is the setpoint value for the roller distance of the corn conditioner.

- ▶ To temporarily change the default value for the roller distance, *refer to page 150*.
- ➡ The change is immediately accepted and displayed on the left in the upper field.

8.5 Information area

EQG000-007

The keys in the information section can be freely assigned via a selection box.

Assigning keys

- ✓ The working screen has been selected.
- ▶ Press the key to be assigned.
  - ⇨ The selection box opens up.
- ▶ Select the required assignment.
- ▶ To save the assignment, press ✓.
- ▶ To cancel the entry, press ✕.

When the selection is saved, the existing assignment is overwritten.

8.6 Engine and driving data display range

The "Engine and driving data" display range shows the machine's current fuel levels, engine and driving data.

EQG002-016

Pos.	Designation	Explanation
1	Indicates coolant temperature	Indicates the current engine coolant temperature in °C (digital and analogue).
2	Display fuel level	Indicates the current fuel level as a % (digital and analogue).
3	Display urea level	Indicates the current urea level as a % (digital and analogue).
4	Display speed in digital format	Indicates the current speed in digital format in km/h or mph.
5	Display speed in analogue format	Indicates the current speed in analogue format in km/h or mph (in "Road mode" working screen only).
6	Display engine speed in digital format	Indicates the current engine speed in digital format in rpm.
7	Display engine speed in analogue format	Indicates the current engine speed in analogue format in rpm.
8	Display engine load in digital format	Indicates the current engine load as % in digital format (in "Field mode" working screen only).
9	Display engine load in analogue format	Indicates the current engine load as % in analogue format (in "Field mode" working screen only).

Warning lights for engine displays and fuel levels

Warning light for coolant temperature (1)

Icon	Explanation
	Coolant temperature OK.
	Coolant temperature in critical range.

Warning light for fuel level (2)

Icon	Explanation
	Fuel tank level greater than 10%.
	Fuel tank level less than 10%.

Warning light for urea level (3)

Icon	Explanation
	Urea tank level greater than 20%.
	Display is lit: Urea tank level less than 20%.
	Display flashes: The engine performance is reduced.

If the level has dropped below 20%, the warning lights on the malfunction warning panel warn of a reduction in the maximum driving speed and obtainable torque.

- To reach full engine performance and driving speed again, pour an adequate amount of urea, in the specified quality, into the urea tank, *refer to page 440*.

8.7 Displaying malfunctions in the "Engine and driving data" display range

EQG002-073

The following malfunction may appear in the "Engine and driving data" display range:

Item	Icon	Designation	Explanation
1		Indicator lamp for urea tank level	Indicates the status of the urea system in conjunction with the indicator lamps of the urea system.

8.8 Traction drive indicator lights

The indicator lamps in the main display area for traction drive inform about the current engine and driving data and warn of malfunctions on the engine and the drive.

EQG002-017

Displays acceleration behaviour (1)

Indicates the current value for the acceleration behaviour.

Icon	Explanation
1	Low acceleration
2	Medium acceleration
3	High acceleration
4	Maximum acceleration

Indicator lamp for direction of travel and parking brake (2)

Indicates the direction of travel and the status of the parking brake.

Icon	Explanation
↑	Direction of travel forwards
N	Neutral mode (idle)
↓	Direction of travel backwards
(P)	Parking brake is applied

Indicator lamp for engine management (3)

Indicates the status of the Power mode.

Icon	Explanation
	Manual "Eco-Power mode" The diesel engine works in energy saving mode.
	Manual "X-Power mode" The diesel engine works in maximum power mode.
	Automatic switchover between "Eco-Power mode" and "X-Power mode".

Indicator lamp for traction control system (TC) (4)

Displays the status of the traction control system (TC).

Icon	Designation	Explanation
	Traction control system (TC) inactive	
	Traction control system (TC) stage I active	The drive torque on the wheels is controlled. Traction control system (TC) stage I allows only low slip (spinning wheels). Connected traction control system (TC) stage I preserves the sward.
	Traction control system (TC) stage I regulates actively	
	Traction control system (TC) stage II active	The drive torque on the wheels is controlled. Traction control system (TC) stage II allows high slip (spinning wheels). Traction control system (TC) stage II ensures that sufficient traction is provided even under difficult conditions.
	Traction control system (TC) stage II regulates actively	

Display for cruise control (5)

Indicates the status of the cruise control and the stored speed when operating with the cruise control.

Icon	Designation	Explanation
	Cruise control is inactive	The stored speed when the cruise control is operated is 12 km/h.
	Cruise control active is active	

9 Terminal - Menus

⚠ WARNING

Risk of injury to persons and damage to machines if error messages are ignored

If error messages are ignored without the fault being rectified injuries may occur to persons and/or severe damage to the machine.

- ▶ Rectify fault if error message is shown.
- ▶ If the fault cannot be rectified, contact KRONE service partner.

9.1 Menu structure

The menu structure is divided into the following menus depending on the machine configuration.

Menu	Sub-menu		Designation
			Cabin, *refer to page 169*
			Terminal, *refer to page 169*
			Settings
			Information
			Armrest, *refer to page 170*
			Diagnostics
			Key test
			Control lever, *refer to page 171*
			Settings
			Key test
			Background lighting, *refer to page 173*
			Settings
			Control unit versions, *refer to page 173*

Menu	Sub-menu		Designation
			Control unit versions software
			Control unit versions hardware
			Printer, *refer to page 174*
			Settings
			Remote maintenance, *refer to page 175*
			Remote maintenance
			Diagnostics
			Settings
			Lighting, *refer to page 177*
			Key test

Menu	Sub-menu		Designation
			Lubrication
			Central lubrication
			Settings
			Diagnostics
			Maintenance
			Intermediate gearbox lubrication
			Diagnostics

Menu	Sub-menu			Designation
				Crop flow
				Header
				Settings
				Diagnostics
				Header drive
				Settings
				Diagnostics
				Auto Scan
				Graphic
				Settings
				Intake
				Settings
				Diagnostics
				Foreign object detection
				Settings
				Diagnostics
				Lifting unit
				Settings

Menu	Sub-menu			Designation
				Calibration
				Diagnostics
				Grinding device and counterblade
				Settings
				Diagnostics
				Maintenance
				Key test GC
				Main coupling
				Settings
				Diagnostics
				Calibration
				Corn conditioner
				Settings
				Diagnostics
				Calibration
				Discharge accelerator
				Settings
				Diagnostics

Menu	Sub-menu			Designation
				Content material sensor
				Measurements
				Settings
				Diagnostics
				CropControl
				Counterweighing
				Settings
				Calibration
				Diagnostics
				Silage additives units
				External silage additives unit
				Settings
				Silage additives unit coarse dosing
				Settings
				Diagnostics
				Calibration

Menu	Sub-menu			Designation
				Auto-loading system
				Measurements
				Settings

Menu	Sub-menu		Designation
			Spout
			Settings
			Diagnostics
			Calibration

Menu	Sub-menu		Designation
			Engine, *refer to page 200*
			Diesel engine, *refer to page 200*
			Settings
			Diagnostics
			Maintenance
			ConstantPower
			Settings
			Compressed air cleaning

Menu	Sub-menu		Designation
			Settings
			Diagnostics
			Maintenance

Menu	Sub-menu		Designation
			Hydraulics, *refer to page 203*
			Header locking
			Diagnostics
			Working hydraulics, *refer to page 203*
			Diagnostics
			Auxiliary hydraulics
			Settings
			Diagnostics

Menu	Sub-menu		Designation
			Drive functions, *refer to page 204*
			Automatic steering system, *refer to page 205*
			Settings
			Diagnostics
			Traction drive, *refer to page 206*
			Calibration

Menu	Sub-menu		Designation
			Diagnostics
			Additional axle
			Settings
			Diagnostics
			Rear axle
			Diagnostics
			Calibration

Menu	Sub-menu		Designation
			Season settings
			User level, *refer to page 210*

9.2 Bringing up menu level

BX001-215

Depending on how the machine is equipped, the main menu is divided into the following menus:

Icon	Designation	Explanation
	“Cabin” menu	Opens the menu if the corresponding key is pressed.
	“Central Lubrication” menu	

Icon	Designation	Explanation
	“Crop Flow” menu	Opens the menu if the corresponding key is pressed.
	“Spout” menu	
	“Engine” menu	
	“Auxiliary Hydraulics” menu	
	“Drive Functions” menu	
	“Season Settings” menu	
	“User Administration” menu	

INFORMATION

Touching the coloured parts of the machine illustration in the display directly opens the corresponding menus.

- To bring up the menu level from the working screen, press .

9.3 Navigating in menus

The functions of the terminal are divided into menus. Navigate through the menu structure by using the keys in the individual menus.

- To open the main menu from the working screen, press .
- To open a menu from the main menu, press the key of the corresponding menu.
- To open sub-menus from a menu, press the key of the corresponding sub-menu.
- To change from one sub-menu to another one, press the key of sub-menu in the footer.
- To leave the current menu, press .
- To open the main menu from a menu, press repeatedly until the main menu is selected.
- To go one step forwards again after a step back, press .
- To open the working screen from the main menu or a menu, press .

9.3.1 Changing/saving parameter

- ▶ To change a parameter, press the corresponding parameter key.
- ➡ A value input field or a selection box opens depending on the setting menu.
- ▶ If a value input field opens, change the value of the parameter.
- ▶ If a selection box opens, change the selection of the parameter.
- ▶ To save the setting, press ✓.
- ▶ To cancel the entry and keep the old setting, press ✕.

9.4 “Diagnostics” menu explanation

> ***INFORMATION***
>
> The purpose of this chapter is to explain in general terms how to handle the diagnostics masks. The diagnostics masks which can be selected in the individual menus are no longer listed in detail.

The sensors/actuators and the readable process values of the menu component are listed in the "Diagnostics" menus.

The applied voltages/currents can be read off for these components/values.

EQG002-050

1 Icon for the component type/process value
2 Number of the sensor/actuator
3 Designation of the sensor/actuator
4 Status of the sensor/actuator
5 Key for opening the sensor graphic display
6 Graphic display of the applied and permitted currents of the selected sensor/actuator

- ▶ To open the graphic display of a sensor or actuator, press .

> ***INFORMATION***
>
> This screen is needed in case of a contact with customer service as the service technician can conclude errors on the forage harvester from the values in this screen.

Component type/process value

Icon	Explanation
	Sensor
	Actuator
	Process value

Sensor/actuator status displays

Icon	Explanation
	Sensor/actuator active
	Sensor/actuator inactive
	Sensor attenuated
	Sensor unattenuated
	OK
	Not OK
	Momentary switch pressed, switch closed
	Momentary switch not pressed, switch not closed
	Cable break
	Short circuit
	Cable break/short circuit
	Other error
	Status not available

9.5 “Cabin” menu

EQG002-025

✓ For The menu level is active, *refer to page 165*.

▶ To open the "Cabin" menu, press  .

➡ The display shows the "Cabin" menu with its menus.

9.5.1 “Terminal” menu

"Terminal settings" menu

The current settings of the terminal for language, day/night design, units of measurement, date and time are displayed in the menu and can be changed.

The background colour of the display can be changed for the day/night design. In this way the driver can easily read the display without being dazzled even if the ambient light changes.

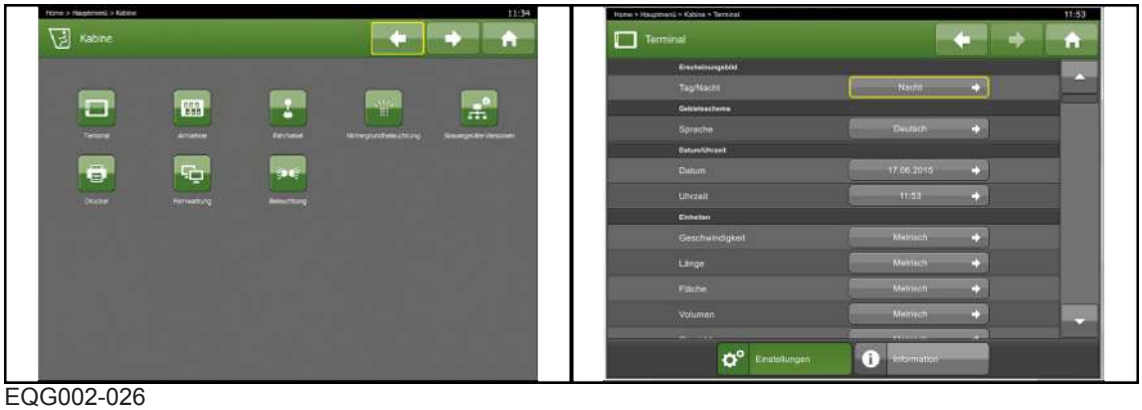

EQG002-026

✓ The "Cabin" menu has been selected.

▶ To open the menu, press  first, then  .

➡ The display shows the "Terminal settings" menu.

▶ To change and save the parameter, *refer to page 167*.

"Terminal information" menu

The software version is displayed in the "Terminal information" menu.

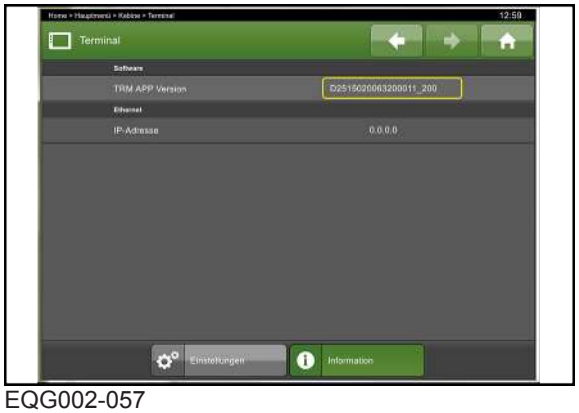

EQG002-057

✓ The "Cabin" menu has been selected.

▶ To open the menu, press first, then .

➡ The display shows the "Terminal information" menu.

9.5.2 “Armrest” menu

"Armrest diagnostics" menu

Data on the quick-stop switch in the cabin and on the quick-stop switch for the grinding control unit are indicated in the menu.

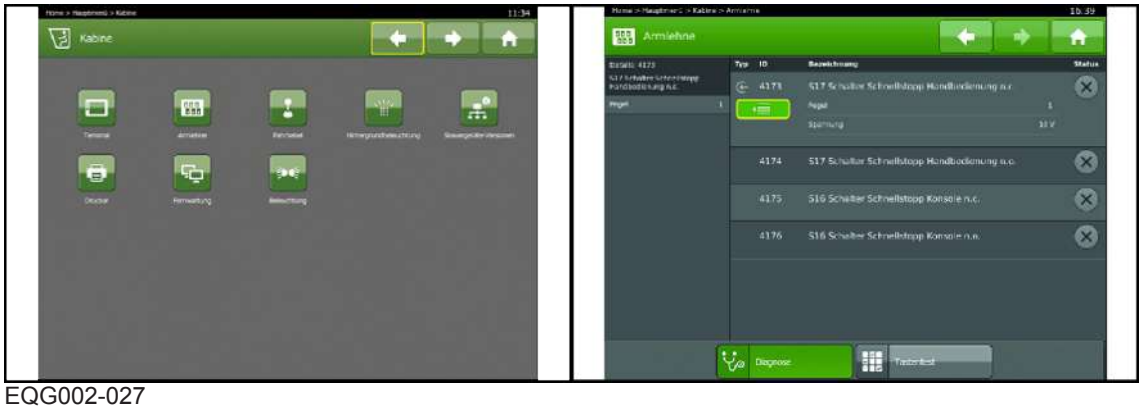

EQG002-027

✓ The "Cabin" menu has been selected.

▶ To open the menu, press first, then .

➡ The display shows the "Armrest diagnostics" menu.

Further information *refer to page 167*.

"Armrest key test" menu

The keys on the keypad, the additional keypad, the main mode switch and the navigation module can be tested in the menu.

✓ The "Cabin" menu has been selected.

▶ To open the menu, press first, then .

➡ The display shows the "Armrest key test" menu.

EQG003-051

Name of the key	Explanation
Key test KP1	Key test left half of the keypad
Key test KP2	Key test right half of the keypad
Key test AKP	Key test additional keypad
Key test MMS	Key test Main Mode Switch
Key test NM	Key test navigation module

- To select an operating element, which is to be tested, press the key for the corresponding operating element
  - ⇨ The operating element is displayed on the terminal.
- Press the key, which is to be tested, and check the background colour of the key on the terminal.

The colours of the keys on the terminal indicate whether there is an error between the operating element and the control unit.

Icon	Explanation
	Key not pressed.
	Key pressed.
	Error recognized.

9.5.3 “Control Lever” menu

"Control lever settings" menu

The M1 and M2 memory keys on the control lever can be assigned with functions in the menu.

EQG002-028

Possible assignments of the memory keys:

- Raise/lower plant divider (for maize header) or holding-down clamp (for grass header)
- Increase/reduce working width
- Switch between value 1 and value 2 for the chop length
- Increase/reduce header speed
- Turn pendulum frame to the left/right
- Increase/reduce discharge distance of the discharge accelerator
- Raise/lower spout
- Activate/deactivate auto-loading system (version with "Auto-loading system")
- Warning beacon/horn switched on
- Raise/lower hitch attachment

✓ The "Cabin" main menu has been selected.

▶ To open the menu, press  .

➡ The display shows the "Control lever settings" menu.

▶ To change and save the parameter, *refer to page 167*.

▶ To open the "Key test" menu, press  .

"Control lever key test" menu

The keys of the control lever can be tested in the menu.

EQG002-067

▶ Press a key on the control lever and check the background colour of the depressed key on the terminal.

The colours of the keys on the terminal indicate whether there is an error between the control lever and the control unit.

Icon	Explanation
	Key not pressed.
	Key pressed.
	Error recognized.

9.5.4 “Background Lighting” menu

"Background lighting settings" menu

The "Background lighting settings" menu can be used to set the intensity of the background lighting of operating elements and control levers.

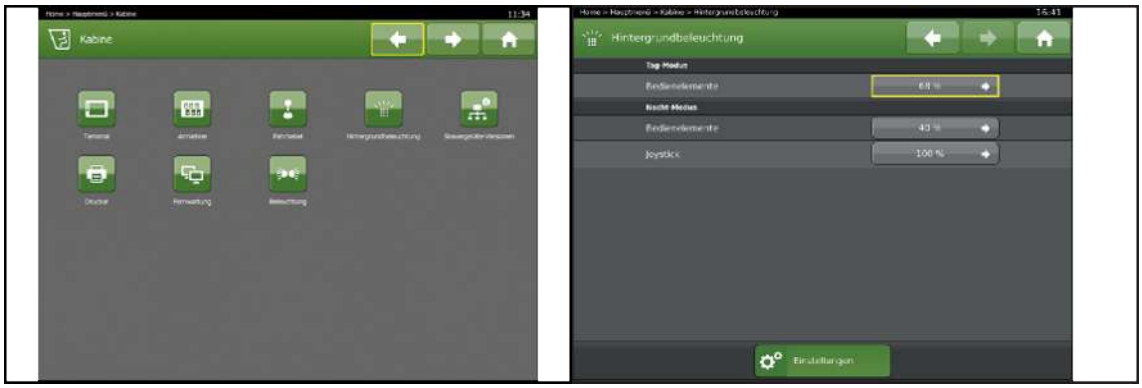

EQG002-029

✓ The "Cabin" menu has been selected.

▶ To open the menu, press  .

➡ The display shows the "Background lighting settings" menu.

▶ To change and save the parameter, *refer to page 167*.

9.5.5 “Control Unit Versions” menu

"Control unit versions software" menu

The "Control unit versions software" menu displays the current software versions of the control units.

EQG002-030

✓ The "Cabin" menu has been selected.

▶ To open the menu, press first, then .

➡ The display shows the "Control unit versions software" menu.

"Control unit versions hardware" menu

The "Control unit versions hardware" menu displays the current hardware versions of the control units.

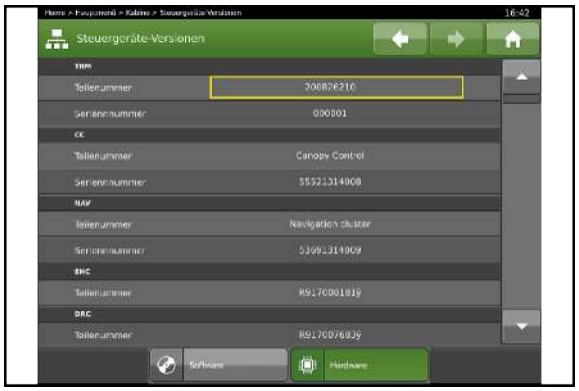

EQG002-051

✓ The "Cabin" menu has been selected.

▶ To open the menu, press first, then .

➡ The display shows the "Control unit versions hardware" menu.

9.5.6 “Printer” menu

"Printer settings" menu

The current printer type is shown in the "Printer settings" menu. The printer type can be changed.

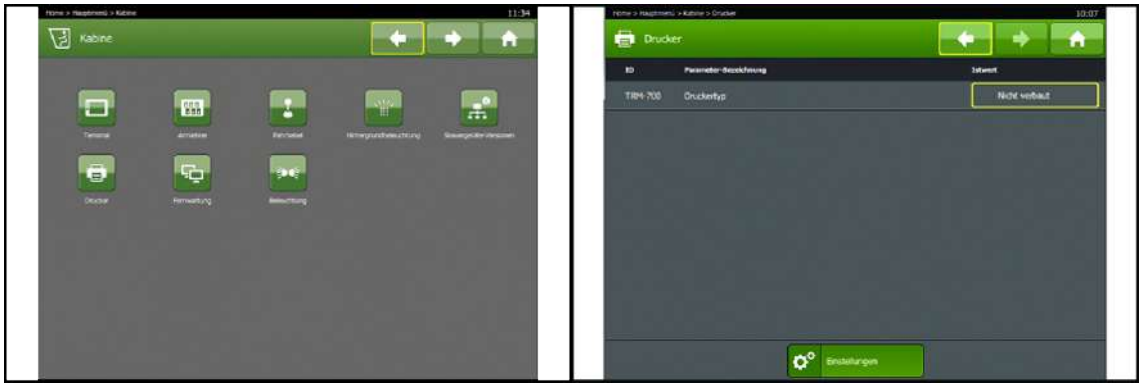

EQG002-068

✓ The "Cabin" menu has been selected.

▶ To open the menu, press  .

➡ The display shows the "Printer settings" menu.

▶ To change and save the parameter, *refer to page 167*.

9.5.7 "Remote maintenance" menu

"Remote maintenance" menu

In the "Remote maintenance" menu the same data, which is displayed on the terminal in the machine, can be displayed to a KRONE customer service employee on the screen at his place of work.

To do this, the machine must be equipped with "SmartConnect" (for the "Smart Connect" version) which connects to the KRONE customer service through the mobile network and transmits the data to it.

EQG003-052

✓ The "Cabin" menu has been selected.

▶ To open the menu, press  first, then  (Remote maintenance).

➡ The display shows the "Remote maintenance" menu.

▶ To start the remote maintenance, press 

.

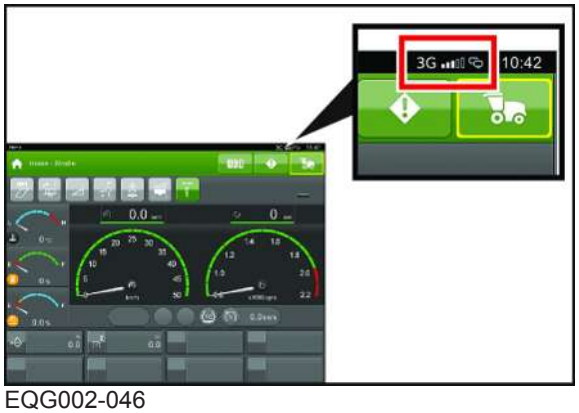

EQG002-046

During remote maintenance the mobile networks used and the reception quality are displayed with icons.

"Remote maintenance diagnostics" menu

✓ The "Cabin" menu has been selected.

▶ To open the menu, press first, then .

➡ The display shows the "Remote maintenance diagnostics" menu.

▶ Further information *refer to page 167*.

"Remote maintenance settings" menu

The settings for the remote maintenance parameters are displayed in the "Remote maintenance" menu and can be changed.

EQG002-072

✓ The "Cabin" menu has been selected.

▶ To open the menu, press first, then (Settings).

➡ The display shows the "Remote maintenance settings" menu.

▶ To change and save the parameter, *refer to page 167*.

9.5.8 "Lighting" menu

"Lighting settings" menu

The "Lighting settings" menu can be used to set the time period for activation of the "Coming Home" and "Leaving Home" functions.

EQG002-081

✓ The "Cabin" menu has been selected.

▶ To open the menu, press  .

➡ The display shows the "Lighting settings" menu.

▶ To change and save the parameter, *refer to page 167*.

▶ To open the "Key test" menu, press  .

"Lighting key test" menu

The LED of the light control unit can be tested in the menu.

EQG002-069

▶ Press a key on the light control unit and check the background colour of the depressed key on the terminal.

The colours of the keys on the terminal indicate whether there is an error between the light control unit and the control unit.

Icon	Explanation
	Key not pressed.
	Key pressed.
	Error recognized.

9.6 "Lubrication" menu

The lubricant quantity for the central lubrication can be changed in the menu and a lubrication process can be started.

The status can be displayed during lubrication of the intermediate gearbox and the central lubrication.

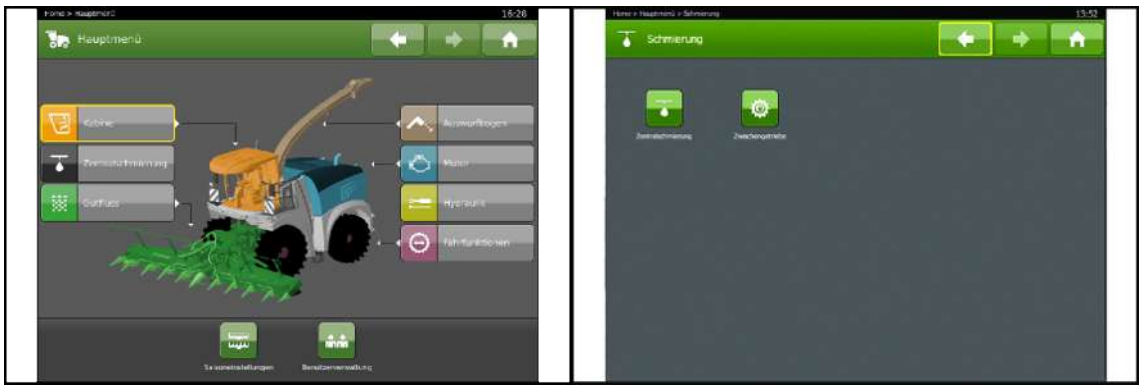

EQG002-070

✓ For The menu level is active, *refer to page 165*.

▶ To open the "Lubrication" menu, press  .

➡ The display shows the "Lubrication" menu with its menus.

9.6.1 "Central lubrication" menu

"Central lubrication settings" menu

The lubricant quantity for a lubrication cycle of the central lubrication system can be adjusted in the menu.

EQG002-071

✓ The "Lubrication" menu has been selected.

▶ To open the menu, press  .

➡ The display shows the "Central lubrication settings" menu.

▶ To change and save the parameter, *refer to page 167*.

"Central lubrication maintenance" menu

The "Central lubrication maintenance" menu displays the maintenance status for the central lubrication. The Main Mode Switch is in the "Maintenance" position, *refer to page 101*.

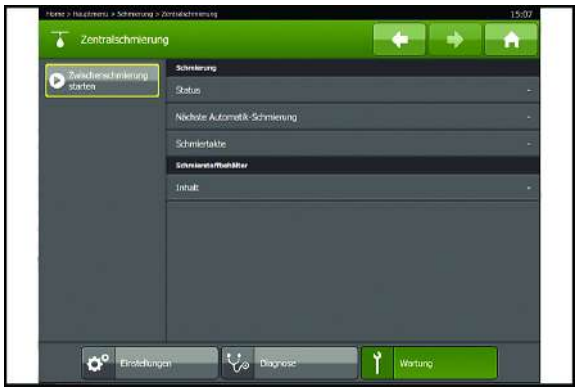

EQG002-053

✓ The "Central lubrication" menu has been selected.

▶ To open the menu, press  .

➡ The display shows the "Central lubrication maintenance" menu.

▶ To start intermediate lubrication using the central lubrication system, press

and follow the instructions on the dialogue menu step-by-step.

▶ To open the “Diagnostics” menu, press  .

▶ Further information, *refer to page 167*.

9.6.2 "Intermediate gearbox" menu

"Intermediate gearbox diagnostics" menu

Data of the sensors and actuators of the intermediate gearbox is displayed in the menu.

EQ002-329 / EQ002-332

✓ The "Lubrication" menu has been selected.

▶ To open the menu, press  .

The display shows the "Intermediate gearbox diagnostics" menu.

Data of the sensors and actuators of the intermediate lubrication is displayed in the "Intermediate gearbox diagnostics" menu.

Further information *refer to page 167*.

9.7 "Crop flow" menu

The components in the crop flow can be set in the menu.

Calibrations and maintenance work can be started on individual components in the crop flow.

EQG003-054

✓ For The menu level is active, *refer to page 165*.

▶ To open the "Crop flow" menu, press  .

➡ The display shows the "Crop flow" menu with its menus.

9.7.1 “Header” menu

"Header settings" menu

The settings for header parameters are displayed in the "Header settings" menu and can be changed.

EQG003-053

✓ The "Crop flow" main menu has been selected.

▶ To open the menu, press .

➡ The display shows the "Header settings" menu.

▶ To change and save the parameter, *refer to page 167*.

▶ To open the “Diagnostics” menu, press .

▶ Further information, *refer to page 167*.

9.7.2 “Header Drive” menu

"Header drive settings" menu

The settings for the header drive parameters are displayed in the menu and can be changed.

EQG003-055

✓ The "Crop flow" main menu has been selected.

▶ To open the menu, press .

➡ The display shows the "Header drive settings" menu.

▶ To change and save the parameter, *refer to page 167*.

▶ To open the “Diagnostics” menu, press .

▶ Further information, *refer to page 167*.

9.7.3 "AutoScan" menu

"AutoScan graphic" menu

The settings for the AutoScan are displayed as values and in a graphic in the menu. The settings can be changed.

EQG003-056

✓ The "Crop flow" main menu has been selected.

▶ To open the menu, press  .

➡ The display shows the "AutoScan Graphic" menu.

▶ To change and save the parameter, *refer to page 167*.

To switch to the "Settings" menu, press  .

"AutoScan settings" menu

The settings for AutoScan parameters are displayed in the menu and can be changed.

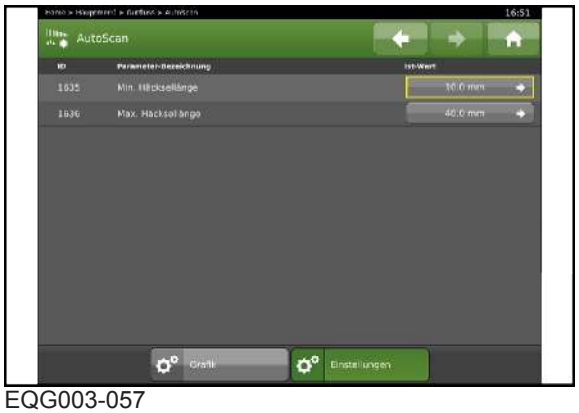

EQG003-057

▶ To change and save the parameter, *refer to page 167*.

9.7.4 “Intake” menu

"Intake settings" menu

The settings for intake parameters are displayed in the menu and can be changed.

EQG003-058

✓ The "Crop flow" main menu has been selected.

▶ To open the menu, press  .

➡ The display shows the "Intake settings" menu.

▶ To change and save the parameter, *refer to page 167*.

▶ To open the “Diagnostics” menu, press  .

▶ Further information, *refer to page 167*.

9.7.5 "Foreign object detection" menu

"Foreign object detection settings" menu

The settings for the foreign object detection parameters are displayed in the menu and can be changed.

EQG003-101

✓ The "Crop flow" main menu has been selected.

▶ To open the menu, press  .

➡ The display shows the "Foreign object detection settings" menu.

▶ To change and save the parameter, *refer to page 167*.

▶ To open the “Diagnostics” menu, press  .

▶ Further information, *refer to page 167*.

9.7.6 “Lifting Unit” menu

"Lifting unit settings" menu

The settings for lifting unit parameters are displayed in the menu and can be changed.

EQG003-061

✓ The "Crop flow" main menu has been selected.

▶ To open the menu, press  .

▶ The display shows the "Lifting unit settings" menu.

▶ To change and save the parameter, *refer to page 167*.

▶ To switch to the "Calibration" menu, press  .

"Lifting unit calibration" menu

The menu is used to determine the upper and the lower end position of the lifting unit as well as the weight of the header.

EQG003-062

⚠ WARNING

Risk of injury due to unexpected movement of parts

During the calibration process, there is risk of injury for persons staying in the area of the lifting unit, header and spout.

▶ Ensure that there is no one in the swivel range and range of movement of lifting unit, header and spout while the calibration process is performed.

> ***INFORMATION***
>
> The lifting unit must be calibrated only after working on the lifting unit or after replacing the electronics.
>
> The calibration values are stored separately for the grass headers, maize header and direct cut header. Therefore the calibration must be run with each appropriate header.

✓ A header has been mounted.

✓ The "Grass header" / "Maize header" / "Direct cut header" operating mode has been set according to the mounted header, *refer to page 180*.

✓ The main mode switch is in the "Maintenance" position, *refer to page 101*.

✓ For maize header: The maize header is in the working position, see separate operating instructions for maize header.

✓ The header is placed on the ground on an even surface and is aligned horizontally, *refer to page 361*.

▶ To run the calibration using the Dialogue menu, press the "Start calibration" key and follow the instructions in the Dialogue menu step by step.

> ***INFORMATION***
>
> The calibration process is supported by the terminal. Missing requirements for calibration are displayed in the terminal.

▶ To open the “Diagnostics” menu, press  .

▶ Further information, *refer to page 167*.

9.7.7 "Grinding device and counterblade" menu

"Grinding device and counterblade settings" menu

The settings for the grinding device are displayed in the menu and can be changed.

EQG003-063

✓ The "Crop flow" main menu has been selected.

▶ To open the menu, press  .

▶ To change and save the parameter, *refer to page 167*.

▶ To switch to the "Maintenance" menu, press  .

"Grinding device and counterblade maintenance" menu

The menu can be used to check the status of the grinding device and to start the grinding processes.

The complete grinding process is described in the chapter Maintenance – Feed system, *refer to page 480*.

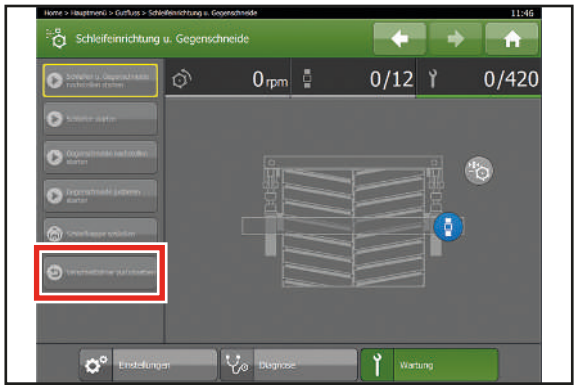

EQG003-064

Icon	Explanation
	Counterblade and chopping blade are in contact (for the version with "automatic counterblade adjustment")
	Counterblade and chopping blade are not in contact (for the version with "automatic counterblade adjustment")
	Grinding stone position
	Grinding stone position unknown

- To reset the wear counter, press the “Reset wear counter” key.
- To change to “Key Test GC”, first press  and then  .

"Grinding device and counterblade key test GC" menu

The keys of the grinding control unit can be tested in the menu.

EQG003-065

2 people are required to run the test.

✓ The Main Mode Switch is in the "Maintenance mode" position.
✓ The parking brake is applied.
✓ The lifting unit is in the lower position.
✓ The main coupling is switched on

▶ An operator presses a key on the grinding control unit.

▶ A second operator checks the background colour of the depressed key on the terminal.

The colours of the keys on the terminal indicate whether there is an error between the grinding control unit and the control unit.

Icon	Explanation
	Key not pressed.
	Key pressed.
	Error recognized.

▶ To open the “Diagnostics” menu, press .

▶ Further information, *refer to page 167*.

9.7.8 “Main Coupling” menu

"Main coupling settings" menu

The menu can be used to adjust the transmission ratio of the VariLOC chop length gearbox.

EQG003-066

✓ The "Crop flow" main menu has been selected.

▶ To open the menu, press .

▶ The display shows the "Main coupling settings" menu.

▶ To change and save the parameter, *refer to page 167*.

▶ To switch to the "Calibration" menu, press .

"Main coupling calibration" menu

The "Main coupling calibration" menu is used to determine the coupling point of the main coupling.

EQG003-067

⚠ *WARNING*

Risk of injury due to unexpected start-up of the chopping drum

The chopping drum is switched on during the calibration process. This poses a risk of injury for people staying in the area of the chopping drum.

- ▶ Ensure that there is nobody in the area of the chopping drum during the calibration process.

- ✓ The quick-stop switch grinding control unit is released, *refer to page 115*.
- ✓ The quick-stop switch armrest is released, *refer to page 101*.
- ✓ The Main Mode Switch is in the "Field mode" position, *refer to page 101*.
- ✓ The driver is sitting on the driver's seat.
- ▶ To run the calibration using the Dialogue menu, press the "Start calibration" key and follow the instructions in the Dialogue menu step by step.

INFORMATION

The calibration process is supported by the terminal. Missing requirements for calibration are displayed in the terminal.

- ▶ To open the “Diagnostics” menu, press  .
- ▶ Further information, *refer to page 167*.

9.7.9 “Corn Conditioner” menu

"Corn conditioner settings" menu

The settings for corn conditioner parameters are displayed in the menu and can be changed.

EQG003-068

✓ The "Crop flow" main menu has been selected.

▶ To open the menu, press .

➡ The display shows the "Corn conditioner settings" menu.

▶ To change and save the parameter, *refer to page 167*.

▶ To switch to the "Calibration" menu, press .

"Corn conditioner calibration" menu

⚠ *WARNING*

Danger of injury resulting from unintentional movement of machine parts

While actuating machine functions, the machine may carry out unexpected movements. As a result, people in the operating area of the machine parts may get hurt or objects could be damaged.

▶ Secure the machine against rolling away.

▶ Make sure that there are no people, objects or animals in the area that is affected by machine parts.

▶ Machine functions must only be actuated by qualified personnel.

The menu is used to equalise the setpoint and the actual distance between the rollers of the corn conditioner.

The corn conditioner must always be calibrated

- if the corn conditioner was removed and re-installed.
- if the corn conditioner was repaired.
- If the actual value of the roller distance differs from the setpoint value.

EQG003-069

✓ The machine is parked safely, *refer to page 27*.

✓ The corn conditioner is in the rear position (move backwards from the working position), *refer to page 235*.

✓ The corn conditioner is electrically connected.

✓ The "Corn conditioner calibration" menu has been selected.

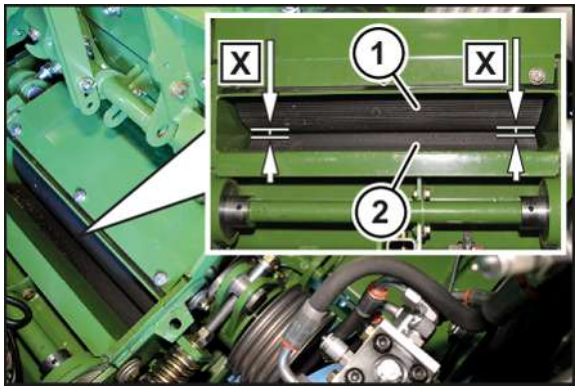

BX001-418

▶ Using a feeler gauge, measure the distance (X) between the rollers (1, 2) on the left and right.

▶ To run the calibration using the Dialogue menu, press the "Start calibration" key and follow the instructions in the Dialogue menu step by step.

> ***INFORMATION***
>
> The calibration process is supported by the terminal. Missing requirements for calibration are displayed in the terminal.

▶ If the distance (X) between the corn conditioner rollers (1, 2) differs from the information on the terminal or the distance (X) on the left and right is not the same, adjust the corn conditioner, *refer to page 523*.

For corn conditioner with discs

✓ The diesel engine has been switched off.

✓ The machine has been safely parked, *refer to page 27*.

✓ The corn conditioner is in the rear position (moved from the working position to the rear), *refer to page 235*.

✓ The "Corn conditioner calibration" menu has been selected.

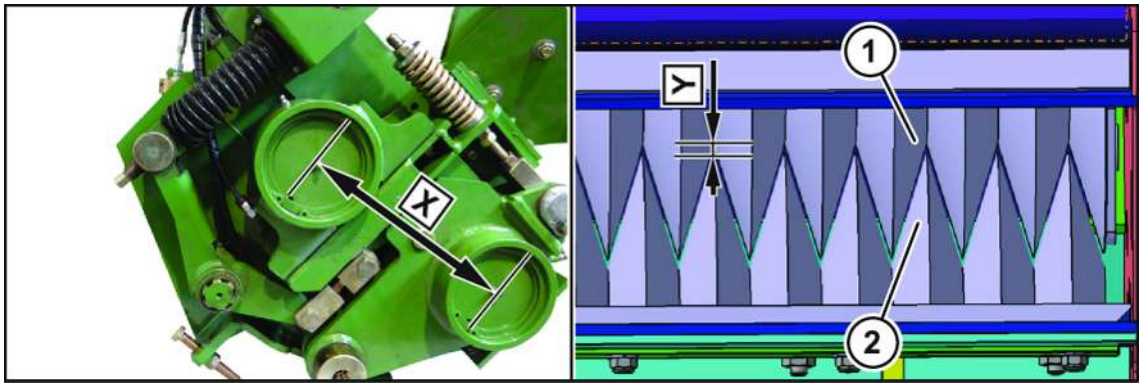

BX001-882

- Measure the distance (X) between the grease nipples of the bearing housings on the left-hand side of the corn conditioner.
- Determine the distance (Y) of the discs (1, 2): Y=X-200 mm.

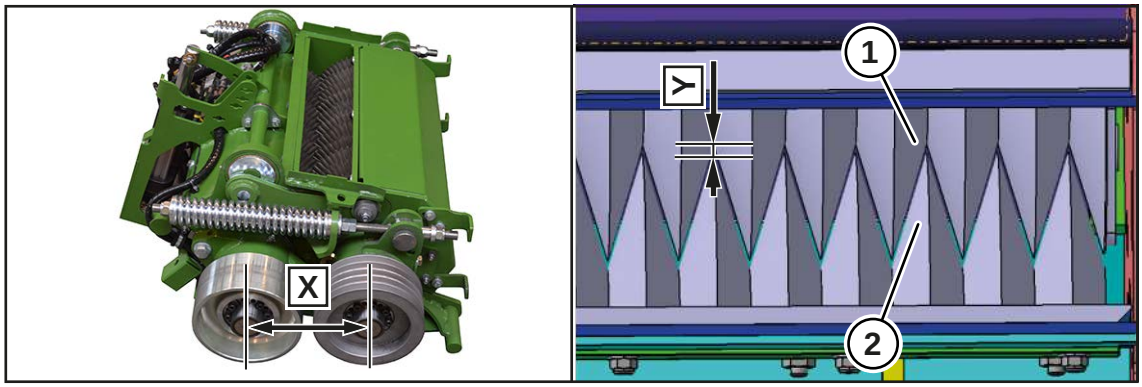

BXG000-073

- Measure the distance (X) between the both centre boreholes of the shafts on the right-hand side of the corn conditioner.
- Determine the distance (Y) of the discs (1, 2): Y=X-200 mm
- Check whether the both determined distances between the discs on left and right are identical.
  - ⇨ The distances between the discs on left and right deviate from each other.

NOTICE! Damage to the corn conditioner if the distances between the discs on left and right deviate from each other!

- Contact the KRONE service partner.
  - ⇨ The distances between the discs on left and right are identical.
- Continue to calibrate the corn conditioner.

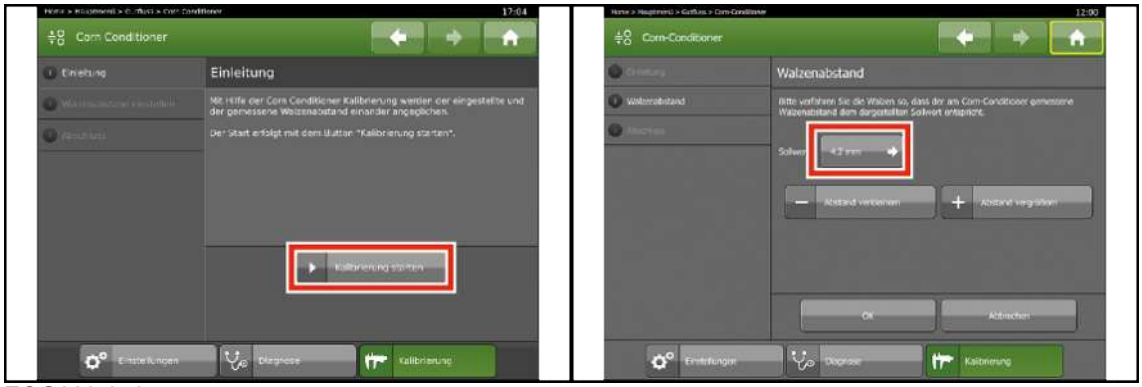

EQG003-070

On the terminal the distance (Y) between the discs is designated as "Roller distance".

- ▶ To calibrate the corn conditioner, press 

in the dialogue menu.
- ▶ Enter the calculated value (Y) in the "Setpoint value" field and press 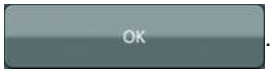

.
- ▶ Move the corn conditioner forwards, *refer to page 259*.
- ▶ To open the “Diagnostics” menu, press  .
- ▶ Further information, *refer to page 167*.

9.7.10 “Discharge Accelerator” menu

"Discharge accelerator settings" menu

The settings for discharge accelerator parameters are displayed in the menu and can be changed.

EQG003-071

✓ The "Crop flow" main menu has been selected.

- ▶ To open the menu, press  .

➡ The display shows the "Discharge accelerator settings" menu.

- ▶ To change and save the parameter, *refer to page 167*.
- ▶ To open the “Diagnostics” menu, press  .
- ▶ Further information, *refer to page 167*.

9.7.11 "Content material sensor" menu

There are 2 systems for measuring the content materials:

- Measurement of moisture in crops (for "CropControl, NIR sensor including printer" version)
  The NIR sensor is installed in the spout and measures the moisture in the crops.
- Measurement of contents and moisture in crops (for "CropControl, AgriNIR online sensor including printer" version)
  The AgriNIR online sensor is installed in the spout and measures the moisture and the content of starch, protein, ADF, NDF, ash and crude fat in the crops.

"Content material sensor measurements" menu

The menu is displayed only for "CropControl, NIR sensor including printer" version.

A sample of the content materials can be taken in the menu.

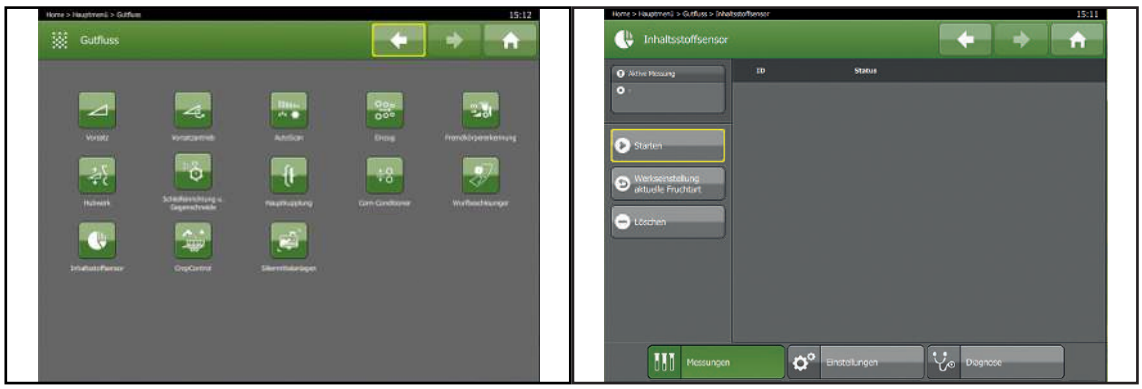

EQG003-107

✓ The "Crop flow" main menu has been selected.

▶ To open the menu, press .

➡ The display shows the "Content material sensor measurements" menu.

To start sampling, Starten press.

Content material sensor menu "Settings"

The settings for parameters of the crop content material sensor are displayed in the menu and can be changed.

Depending on whether and if yes which of the two sensor systems has been installed, different parameters are displayed in the menu.

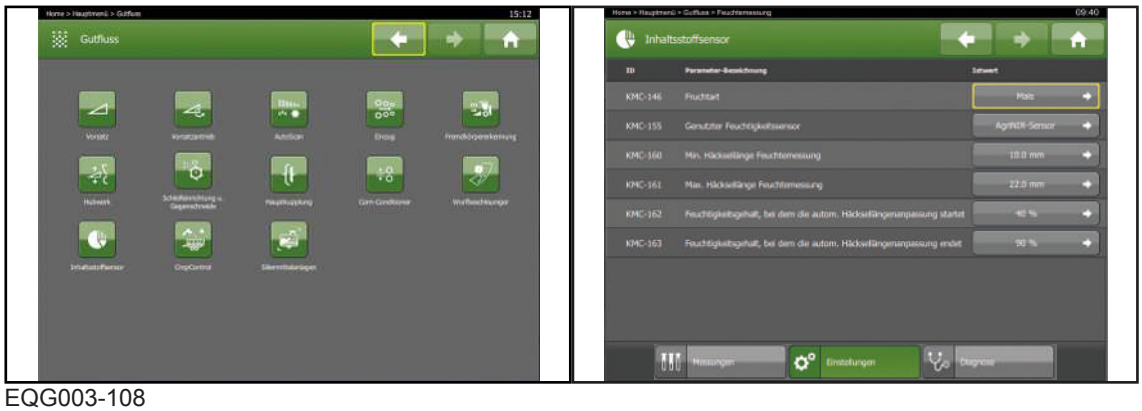

EQG003-108

✓ The "Crop flow" main menu has been selected.

▶ To open the menu, press .

➡ The display shows the contents sensor "Settings" menu.

▶ To change and save the parameter, *refer to page 167*.

▶ To open the “Diagnostics” menu, press .

▶ Further information, *refer to page 167*.

> ***INFORMATION***
>
> To obtain more precise measurement values with the moisture sensor (NIR sensor), carry out a basic calibration before the start of the season. In doing so, the machine is calibrated once for the crop types maize and grass.
> Please contact your dealer to make an appointment at least 5 working days before the start of operations.

9.7.12 "CropControl" menu

"CropControl counterweighing" menu

The menu can be used to run a counterweighing process and to enter the counterweighing value.

EQG003-072

✓ The "Crop flow" main menu has been selected.

▶ To open the menu, press  .

➡ The display shows the "CropControl counterweighing" menu.

The complete counterweighing process is described in the chapter "Field mode operation", *refer to page 387*.

▶ To switch to the "Settings" menu, press  .

"CropControl settings" menu

The settings for CropControl parameters are displayed in the menu and can be changed.

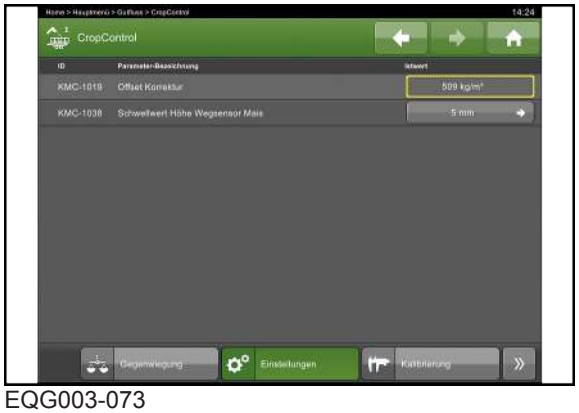

EQG003-073

- To change and save the parameter, *refer to page 166*.
- To switch to the "Calibration" menu, press .

"CropControl calibration" menu

The menu is used to determine the zero position of the pre-compression rollers.

EQG003-074

- To calibrate using the dialogue menu, press Kalibrierung starten and follow the instructions in the dialogue menu step-by-step.

> ***INFORMATION***
>
> The calibration process is supported by the terminal. Missing requirements for calibration are displayed in the terminal.

- To switch to the "Diagnostics" menu, first press » and then .
- Further information, *refer to page 167*.

9.7.13 "Silage additives units" menu

If only one silage additives unit is installed on the machine, the menu for the installed silage additives unit appears in the "Crop flow" menu.

If two or more silage additives units are installed, the "Silage additives unit" menu appears in the "Crop flow" menu.

9.7.13.1 "External silage additives unit" menu

"External silage additives unit settings" menu

The settings for external silage additives unit parameters are displayed in the menu and can be changed.

EQG003-075

✓ The "Crop flow" main menu or the "Silage additives unit" menu has been selected.

▶ To open the menu, press  .

➡ The display shows the "External silage additives unit settings" menu.

▶ To change and save the parameter, *refer to page 167*.

9.7.13.2 "Silage additives unit coarse dosing" menu

"Silage additives unit coarse dosing settings" menu

The settings for parameters of coarse dosing of the silage additives unit are displayed in the menu and can be changed.

EQG003-076

✓ The "Crop flow" main menu or the "Silage additives unit" menu has been selected.

▶ To open the menu, press  .

➡ The display shows the "Internal silage additives unit settings" menu.

▶ To change and save the parameter, *refer to page 167*.

▶ To switch to the "Calibration" menu, press  .

"Silage additives unit coarse dosing calibration" menu

The menu is used to determine the released quantity of silage additives of coarse dosing.

EQG003-077

⚠ *WARNING*

Risk of injury due to silage additives

If handled improperly, the chemicals used in the silage additives unit may cause damage to health.

- ▶ The silage additives unit may only be operated by persons who are familiar with these Operating Instructions and the safety data sheet of the manufacturer of the silage additives. The safety instructions issued by the silage additive manufacturer must be followed.
- ▶ The operator must be instructed in the safe handling of the chemicals used.

- ✓ The quick-stop switch grinding control unit is released, *refer to page 115*.
- ✓ The quick-stop switch armrest is released, *refer to page 101*.
- ✓ The Main Mode Switch is in the "Field mode" position, *refer to page 101*.
- ✓ The driver is sitting on the driver's seat.
- ▶ To run the calibration using the Dialogue menu, press the "Start calibration" key and follow the instructions in the Dialogue menu step by step.

INFORMATION

The calibration process is supported by the terminal. Missing requirements for calibration are displayed in the terminal.

- ▶ To open the “Diagnostics” menu, press  .
- ▶ Further information, *refer to page 167*.

9.7.14 "Auto-loading system" menu

"Auto-loading system measurements" menu

In the menu data of the auto-loading system can be recorded onto a USB storage medium.

EQG003-109

This menu is required when in contact with customer service, as the technicians can use the recorded data to draw conclusions on the operation of the auto-loading system.

To switch to the "Settings" menu, press  .

9.8 "Spout" menu

The settings for spout parameters are displayed in the menu and can be changed.

EQG003-078

✓ For The menu level is active, *refer to page 165*.

▶ To open the "Spout" main menu, press  .

➡ The display shows the spout "Settings" menu.

"Spout settings" menu

EQG003-079

- ▶ To switch to the "Calibration" menu, press  .

Spout "Calibration" menu

The spout "Calibration" menu is used to determine the left and the right end positions of the spout.

EQG003-080

⚠ *WARNING*

Risk of injury due to unexpected movement of parts

During the calibration process, there is risk of injury for persons staying in the area of the lifting unit, header and spout.

- ▶ Ensure that there is no one in the swivel range and range of movement of lifting unit, header and spout while the calibration process is performed.

✓ The spout has been lifted.

- ▶ To run the calibration using the Dialogue menu, press the "Start calibration" key and follow the instructions in the Dialogue menu step by step.

INFORMATION

The calibration process is supported by the terminal. Missing requirements for calibration are displayed in the terminal.

- ▶ To open the “Diagnostics” menu, press  .
- ▶ Further information, *refer to page 167*.

9.9 “Engine” menu

EQG002-031

✓ For The menu level is active, *refer to page 165*.

▶ To open the menu, press  .

➡ The display shows the "Engine" menu with its menus.

9.9.1 “Diesel Engine” menu

"Diesel engine settings" menu

The settings for diesel engine parameters are shown in the "Diesel engine settings" menu where they can also be changed.

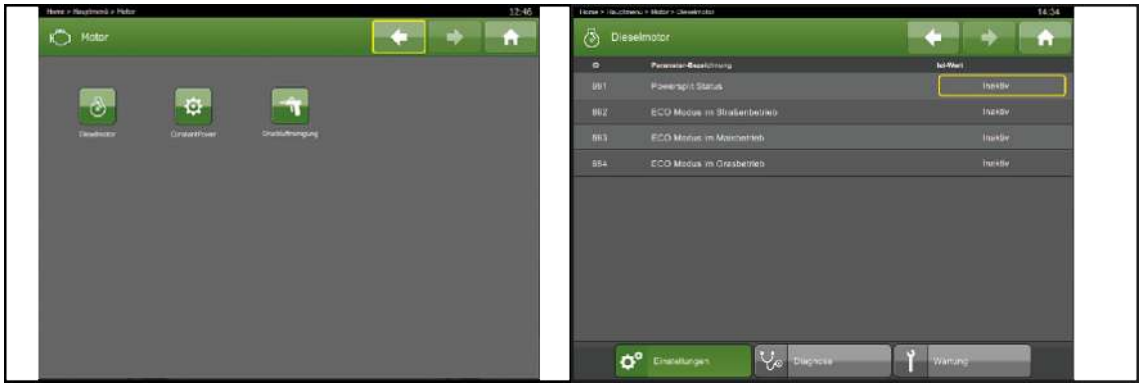

EQG002-032

✓ The "Engine" menu has been selected.

▶ To open the menu, press  first, then  .

➡ The display shows the "Diesel engine settings" menu.

▶ To change and save the parameter, *refer to page 167*.

▶ To open the “Diagnostics” menu, press  .

▶ Further information, *refer to page 167*.

Diesel engine "Maintenance" menu

The "Diesel engine maintenance" menu displays the remaining operating hours of the diesel engine until the next maintenance date.

The display counts down the operating hours of the diesel engine until the next maintenance date of the diesel engine.

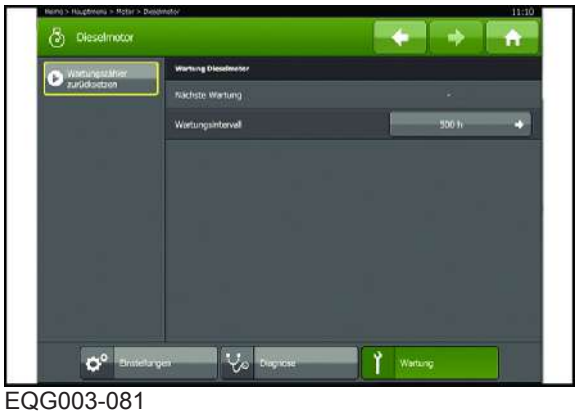

EQG003-081

✓ The "Engine" menu has been selected.

▶ To open the menu, press  first, then  .

➡ The display shows the "Diesel engine maintenance" menu.

NOTICE
Next maintenance date 25 operating hours before reaching the next maintenance date, the terminal issues a warning in an information window. An information window is also displayed when the diesel engine has a residual runtime of less than 25 operating hours until the next maintenance date when the diesel engine starts.

9.9.2 “ConstantPower” menu

"ConstantPower settings" menu

The settings for parameters of the diesel engine load limit control are displayed in the menu and can be changed.

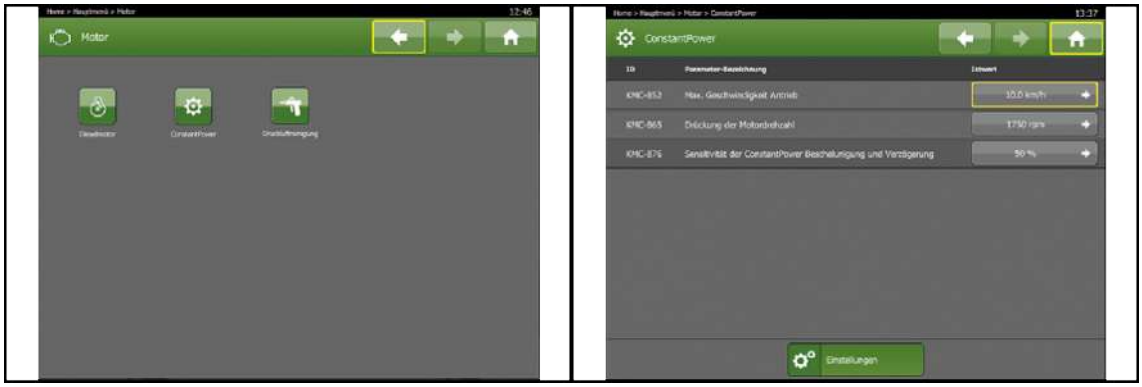

EQG002-033

✓ The "Engine" main menu has been selected.

▶ To open the menu, press  .

➡ The display shows the "ConstantPower settings" menu.

▶ To change and save the parameter, *refer to page 167*.

9.9.3 "Compressed air cleaning" menu

"Compressed air cleaning settings" menu

The settings for compressed air cleaning are displayed in the "Compressed air cleaning settings" menu and can be changed.

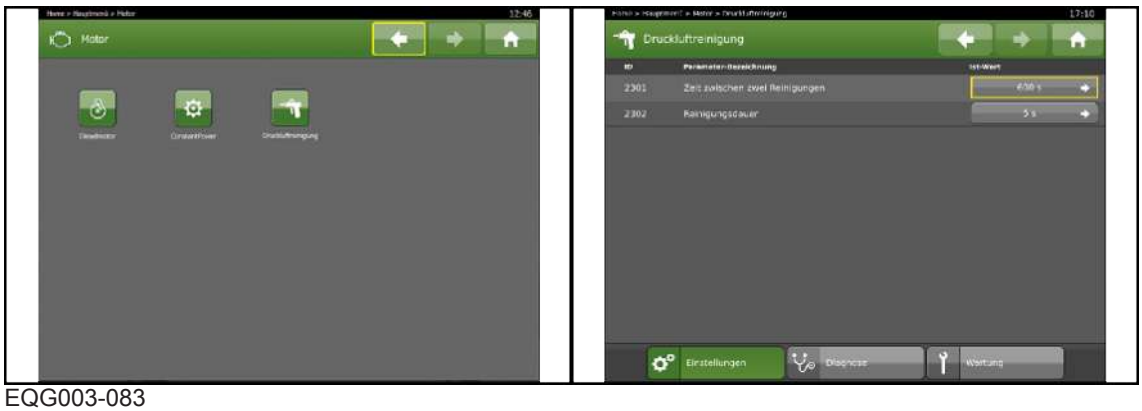

EQG003-083

✓ The "Engine" main menu has been selected.

▶ To open the menu, press  .

➡ The display shows the "Compressed air cleaning settings" menu.

▶ To change and save the parameter, *refer to page 167*.

▶ To switch to the "Maintenance" menu, press  .

"Compressed air cleaning maintenance" menu

The "Compressed air cleaning maintenance" menu can be used to check the time until the next cleaning and the set cleaning duration.

Compressed air cleaning of the engine can be started.

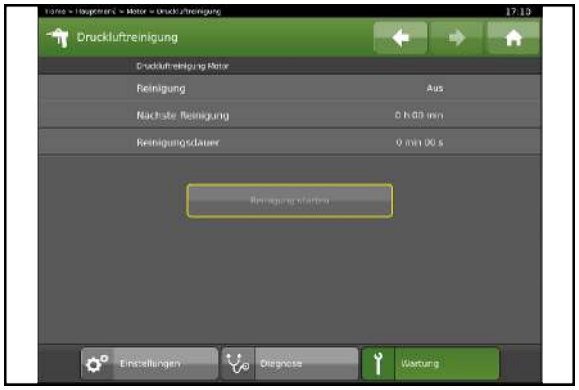

EQG003-084

✓ The main mode switch is in the "Maintenance" position, *refer to page 101*.

▶ To clean the engine with compressed air using the Dialogue menu, press the "Start cleaning" key.

▶ To open the “Diagnostics” menu, press  .

▶ Further information, *refer to page 167*.

9.10 “Hydraulics” menu

EQG002-034

✓ For The menu level is active, *refer to page 165*.

▶ To open the "Hydraulics" menu, press  .

➡ The display shows the "Hydraulics" menu with its menus.

9.10.1 “Header Locking” menu

"Header locking diagnostics" menu

Data of the sensors and actuators of the header locking is displayed in the "Header locking diagnostics" menu.

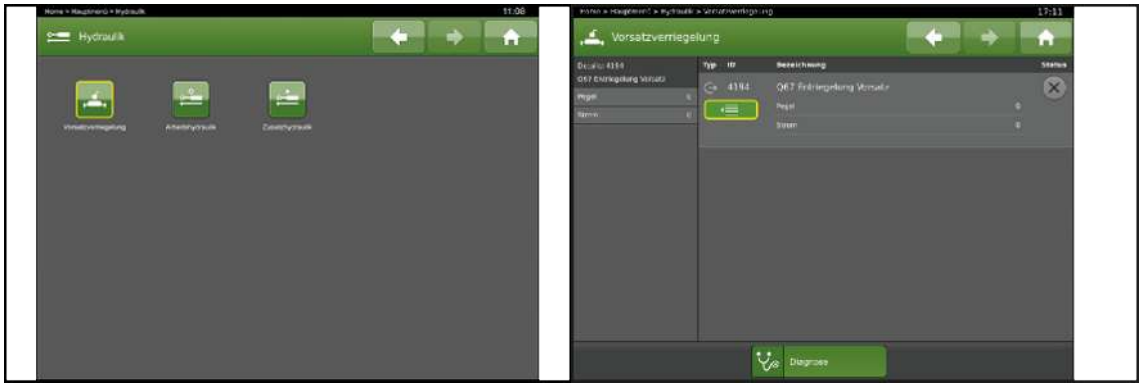

EQG003-085

✓ The "Hydraulics" main menu has been selected.

▶ To open the menu, press  .

➡ The display shows the "Header locking diagnostics" menu.

▶ Further information *refer to page 167*.

9.10.2 “Work Hydraulics” menu

"Working hydraulics diagnostics" menu

The "Working hydraulics diagnostics" menu displays the sensor and actuator data for the working hydraulics.

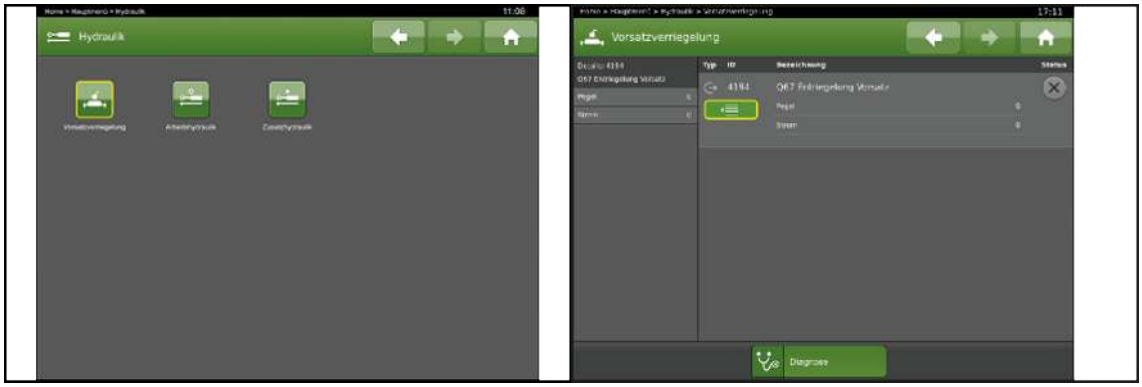

EQG002-035

✓ The “Hydraulics” menu is active.

▶ To open the menu, press .

The display shows the “Working Hydraulics Diagnostics” menu.

▶ Further information, *refer to page 167*.

9.10.3 “Auxiliary Hydraulics” menu

Auxiliary hydraulics "Settings" menu

The settings for auxiliary hydraulics parameters are displayed in the menu and can be changed.

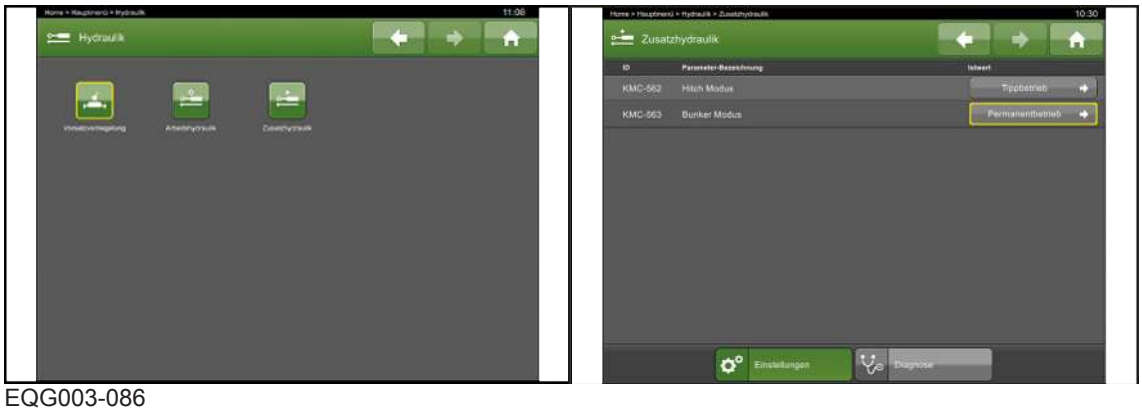

EQG003-086

✓ The "Hydraulics" menu has been selected.

▶ To open the menu, press .

➡ The display shows the auxiliary hydraulics "Settings" menu.

▶ To change and save the parameter, *refer to page 167*.

▶ To open the “Diagnostics” menu, press .

▶ Further information, *refer to page 167*.

9.11 “Drive Functions” menu

The "Driving functions" menu can be used to make settings on the running gear components.

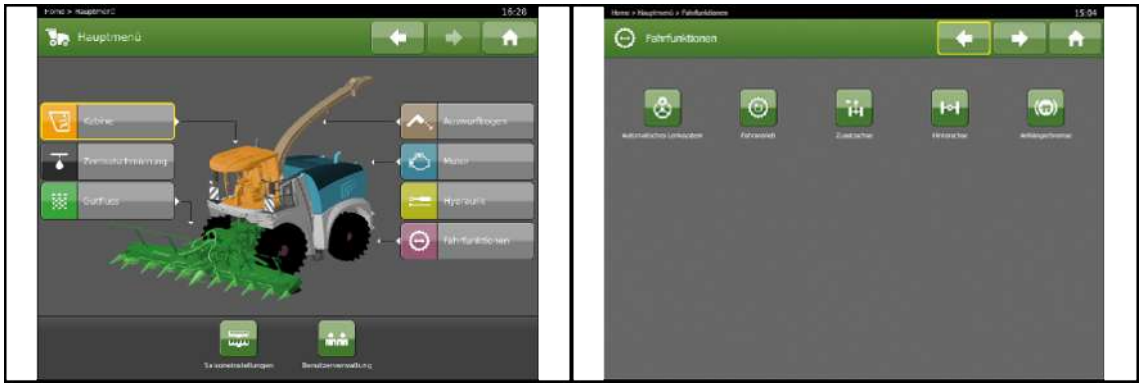

EQG002-036

✓ For The menu level is active, *refer to page 165*.

▶ To open the menu, press  .

➡ The display shows the "Driving functions" menu with its menus.

9.11.1 “Automatic Steering System” menu

"Automatic steering system settings" menu

The settings for automatic steering system parameters are displayed in the "Automatic steering system settings" menu and can be changed.

EQG002-037

✓ The "Driving functions" menu has been selected.

▶ To open the menu, press  first, then  .

➡ The display shows the "Automatic steering system settings" menu.

▶ To change and save the parameter, *refer to page 167*.

"Automatic steering system diagnostics" menu

✓ The "Driving functions" menu has been selected.

▶ To open the menu, press  first, then  .

➡ The display shows the "Automatic steering system diagnostics" menu.

▶ Further information *refer to page 167*.

9.11.2 “Traction Drive” Menu

"Traction drive calibration" menu

In the “Traction Drive Calibration” menu the brake pedal is checked for plausibility.

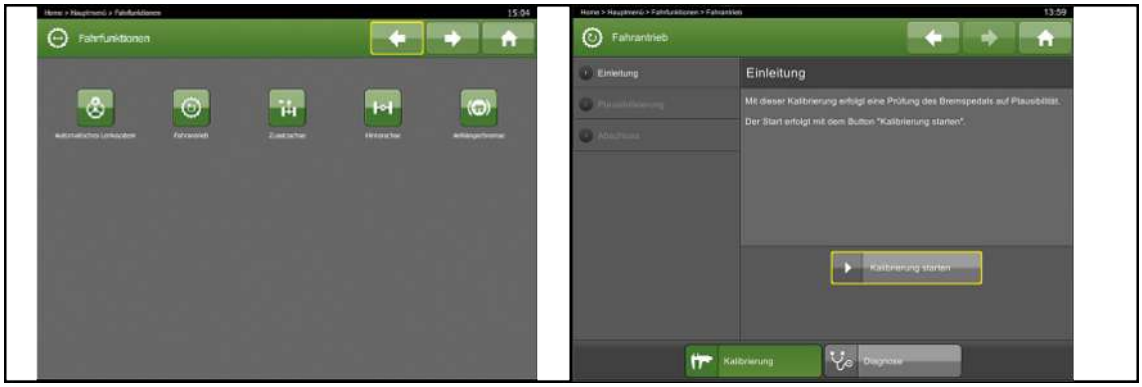

EQG002-038

✓ The "Driving functions" menu has been selected.

▶ To open the menu, press first, then .

➡ The display shows the "Traction drive calibration" menu.

▶ To run the calibration using the Dialogue menu, press the "Start calibration" key and follow the instructions in the Dialogue menu step by step.

> ***INFORMATION***
>
> The calibration process is supported by the terminal. Missing requirements for calibration are displayed in the terminal.

✓ The "Driving functions" menu has been selected.

▶ To open the menu, press first, then .

➡ The display shows the "Traction drive diagnostics" menu.

▶ Further information *refer to page 167*.

9.11.3 “Additional Axle” menu

"Additional axle settings" menu

The settings for the additional axle parameters are displayed in the "Additional axle settings" menu and can be changed.

EQ002-165 / EQ002-171

✓ The "Driving functions" main menu has been selected.

▶ To open the menu, press  .

➡ The display shows the "Additional axle settings" menu.

▶ To change and save the parameter, *refer to page 167*.

▶ To open the “Diagnostics” menu, press  .

▶ Further information, *refer to page 167*.

9.11.4 “Rear Axle” menu

"Rear axle calibration central position" menu

The "Rear axle calibration central position" menu is used to determine the central position of the rear axle.

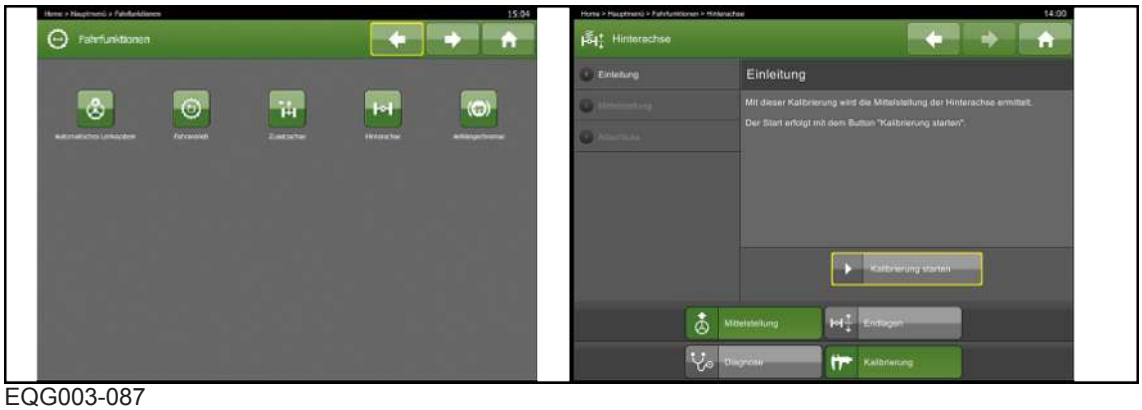

EQG003-087

✓ The "Driving functions" main menu has been selected.

▶ To open the menu, press  .

➡ The display shows the "Rear axle calibration central position" menu.

▶ To calibrate the central position using the dialogue menu, press 

and follow the instructions in the dialogue menu step-by-step.

> ***INFORMATION***
>
> The calibration process is supported by the terminal. Missing requirements for calibration are displayed in the terminal.

- To switch to the "Rear axle calibration end positions" menu, press 

.

"Rear axle calibration end positions" menu

The "Rear axle calibration end positions" menu is used to determine the upper and the lower end positions as well as the position of the rear axle in road mode.

EQG003-088

- To calibrate the end positions using the dialogue menu, press 

and follow the instructions in the dialogue menu step-by-step.

> ***INFORMATION***
>
> The calibration process is supported by the terminal. Missing requirements for calibration are displayed in the terminal.

- To open the “Diagnostics” menu, press  .
- Further information, *refer to page 167*.

9.11.5 "Trailer brake" menu

"Trailer brake diagnostics" menu

Data of the sensors and actuators of the trailer brake is displayed in the menu.

✓ The "Driving functions" menu has been selected.

- To open the menu, press  .

➡ The display shows the menu "Trailer brake diagnostics".

Further information, *refer to page 167*.

9.12 “Season Settings” menu

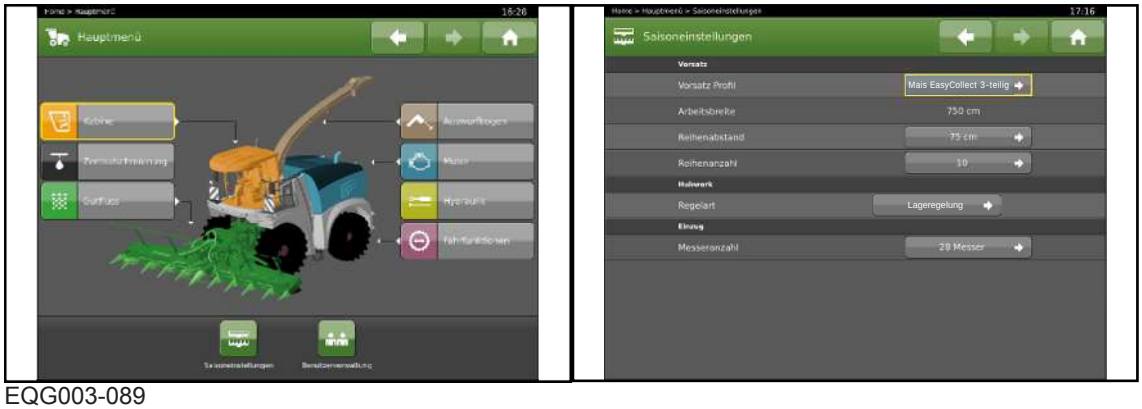

EQG003-089

✓ For The menu level is active, *refer to page 165*.

▶ To open the menu, press  .

➡ The display shows the "Season settings" menu.

The values for the most important settings for header, lifting unit and intake are displayed in the "Season settings" menu and can be changed.

> ***INFORMATION***
>
> The working width can also be changed temporarily via the quick access "Temporarily adjust working width". The setting of the working width in the season setting is not changed.

> ***INFORMATION***
>
> If a grass header or a direct cut header is enabled as a header, the working width is entered in cm or inches.
>
> If a maize header is enabled as a header, the working width is determined by the number of rows and the row spacing. A value for the working width in cm or inches is not displayed and cannot be entered.

▶ To change and save the parameter, *refer to page 167*.

9.13 "User level" menu

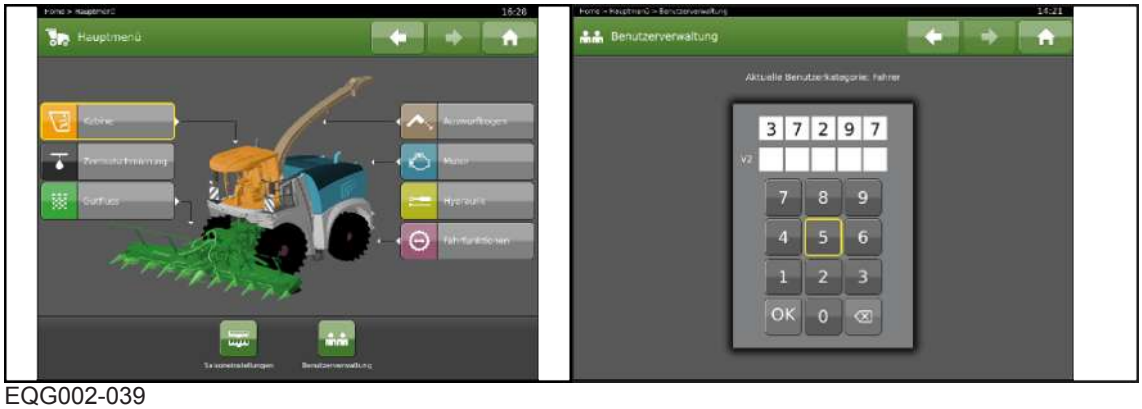

EQG002-039

✓ For The menu level is active, *refer to page 165*.

▶ To open the menu, press  .

➡ The display shows the "User level" menu.

> ***INFORMATION***
>
> Changes in this mask can be made only by service technicians via a PIN.

10 Initial operation

This chapter describes assembly and adjustment work on the machine which may be carried out by qualified technicians only. Here, the notice “Personnel qualification of technicians” applies,*refer to page 20*.

For an overview of the tightening torques, *refer to page 424*.

⚠ WARNING

Risk of injury or damage to the machine due to faulty initial operation

If the initial operation is carried out incorrectly or incompletely, the machine may present defects. As a result, people may be injured or killed or the machine may be damaged.

- ▶ Initial operation must only be carried out by authorised technicians.
- ▶ Read in full and observe the “Personnel qualification of technicians”,*refer to page 20*.

⚠ WARNING

Risk of injury due to non-observance of relevant safety notices

If the relevant safety notices are not observed, persons may get seriously injured or killed.

- ▶ To avoid accidents, the basic safety instructions must be read and observed, *refer to page 19*.

⚠ WARNING

Risk of injury due to non-observance of safety instructions

If the relevant safety routines are not observed, persons may be seriously injured or killed.

- ▶ The safety routines must be read and observed to avoid accidents, *refer to page 34*.

10.1 Checklist for initial operation

- ✓ There are no leakages present in the machine.
- ✓ All cable and plug connections are properly connected and laid.
- ✓ All hoses are properly laid.
- ✓ All the screws and nuts have been checked to make certain they are tight and tightened to the specified tightening torques, *refer to page 424*.
- ✓ The machine is fully lubricated, *refer to page 551*.
- ✓ The wheel chocks are at hand and ready to use, *refer to page 56*.
- ✓ The platforms, steps and standing areas are clean and in proper condition, *refer to page 56*.
- ✓ The fire extinguisher is mounted, *refer to page 212*.
- ✓ The licence plate is mounted, *refer to page 213*.
- ✓ The tyres have been checked and the pressure is set correctly, *refer to page 463*.
- ✓ The hub covers of the rear axle have been checked for damage and tight fit (for "front wheel drive" version), *refer to page 458*.

10.2 Mounting warning panels in operating position

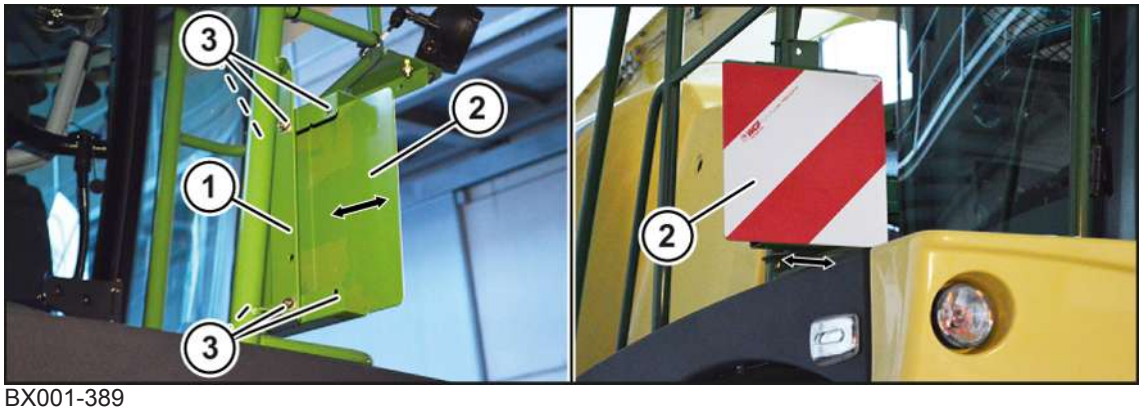

BX001-389

If the warning panels (2) are not mounted due to transport purposes, they must be mounted in operating position before placing the machine in service the first time.

The hole pattern (3) for the screws enables 3 mounting positions.

To adapt the position of the warning panels to the width of the tyres:

- ▶ Determine the mounting position of the warning panels so that the distance from outside edge of machine to outside edge of warning panel does not exceed 100 mm.
- ▶ Mount the warning panels in the operating position on the supports (1), right-hand and left-hand machine side.

10.3 Mounting fire extinguisher

BPG000-034

- ✓ The machine is shut down and safeguarded, *refer to page 34*.
- ▶ Insert the fire extinguisher (1) into the support at top left of the machine so that the operating instructions on the type plate are legible and point towards the outside.

WARNING! Risk of injury due to falling fire extinguisher! In order to secure the fire extinguisher, adjust the tensioning straps with sufficient tension according to the circumference of the fire extinguisher.

- ▶ Adjust the length of the tensioning straps according to the circumference of the fire extinguisher.
- ▶ Shorten the length of the tensioning straps by a few millimetres and close the fasteners to guarantee that the closed tensioning straps are tensioned sufficiently.
- ➡ The tensioning straps have been properly adjusted if the fasteners can only be closed by means of an auxiliary tool (e. g. screwdriver).
- ➡ If it is possible to close the fasteners manually:
  - ▶ Shorten the length of the tensioning straps so far that the fasteners can only be closed by an auxiliary tool (e. g. screwdriver).

10.4 Mounting licence plate

BXG000-057

- ▶ Mount the front licence plate on both support brackets (1) on the front spoiler (2) of the cabin.
- ▶ Mount the rear licence plate in the designated indentation on the tailgate under the licence plate lighting (3).

10.5 Mounting parts dit “Additional Mandatory Driving Light”

When operating the precision forage harvester with a three-part maize header EasyCollect 600-3 or EasyCollect 750-3, XCollect 600-3 or XCollect 750-3, the parts set "Additional mandatory driving light" must be mounted when driving on public highways.

The parts set "Additional mandatory driving light" is included in the accessories kit B257.

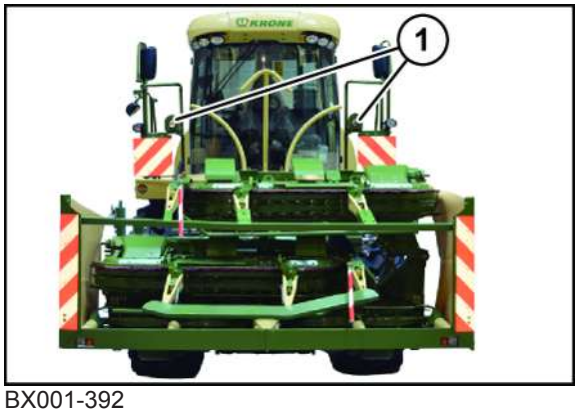

BX001-392

✓ A maize header EasyCollect 600-3, EasyCollect 750-3, XCollect 600-3 or XCollect 750-3 has been mounted and the electrical connection to the forage harvester has been established.

Attaching additional driving light to the right side

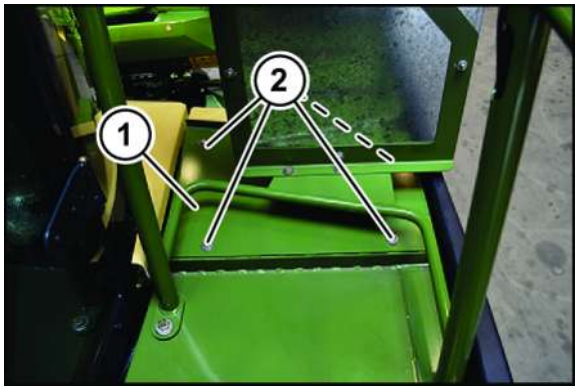

BX001-393

Remove the maintenance cover from the front of the platform:

▶ Remove the screws (2) and the maintenance cover (1).

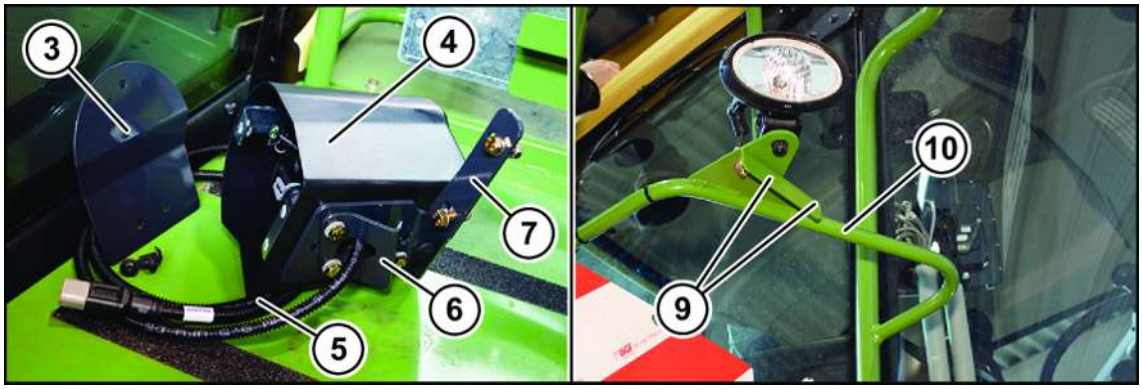

BX001-394

To attach the "additional driving light" parts set:

▶ Remove the cover (3) and the clamping sheet (6).

The housing (4) is screwed with the mounting sheet (7) to the screw points (9) of the reeling and attached with the clamping sheet to the reeling (10).

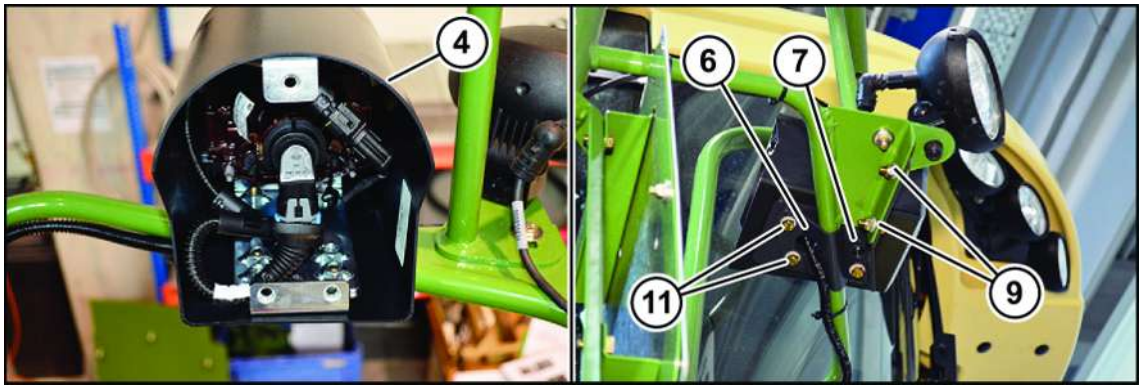

BX001-395

- Place the housing (4) on the reeling and screw the mounting sheet (7) with the screw connections (9) firmly to the reeling.
- Screw the clamping sheet (6) with the screws (11) to the housing (4) and clamp the housing to the reeling.

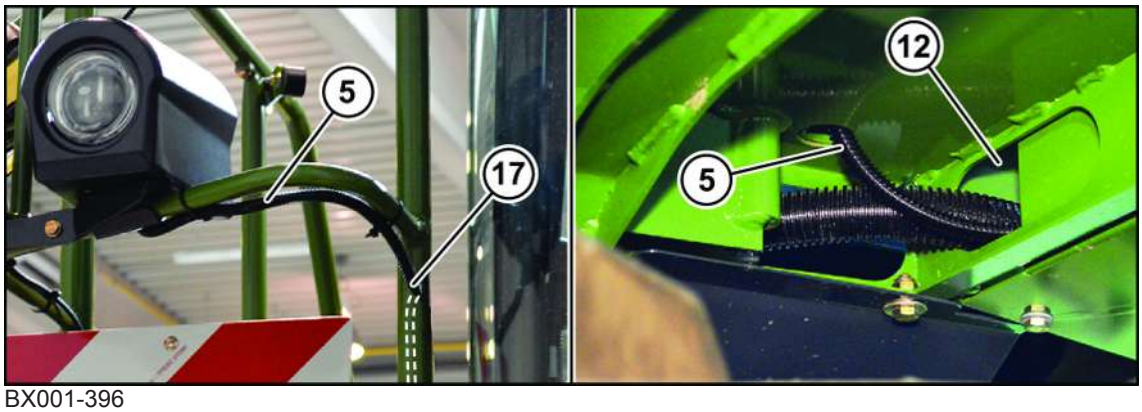

BX001-396

- Insert the cable (5) through the hole (17) in the reeling and guide under the platform into the maintenance hollow (12).

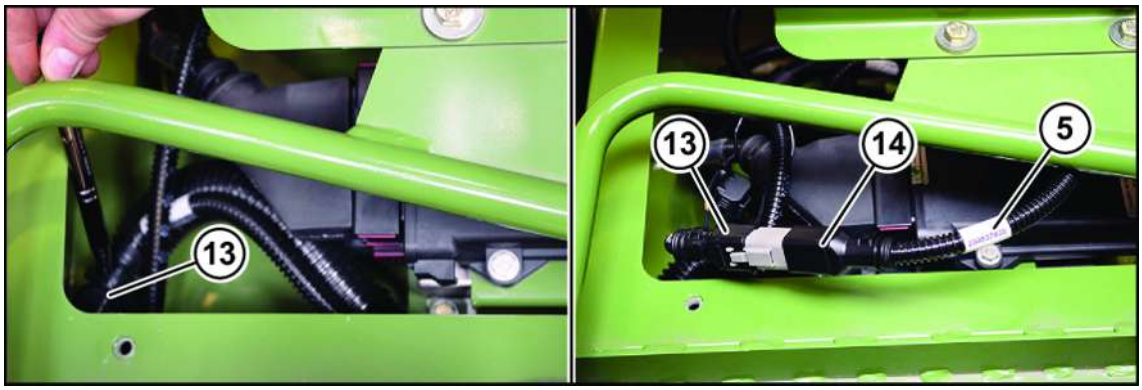

BX001-397

- Loosen the plug (13) on the machine side in the maintenance hollow (cut through cable tie).
- Connect the plug (14) on the cable (5) to the plug (13).

Attaching additional driving light to the left side

- Attach the housing and the cable on the left side of the forage harvester in the same way.

Adjusting additional driving light

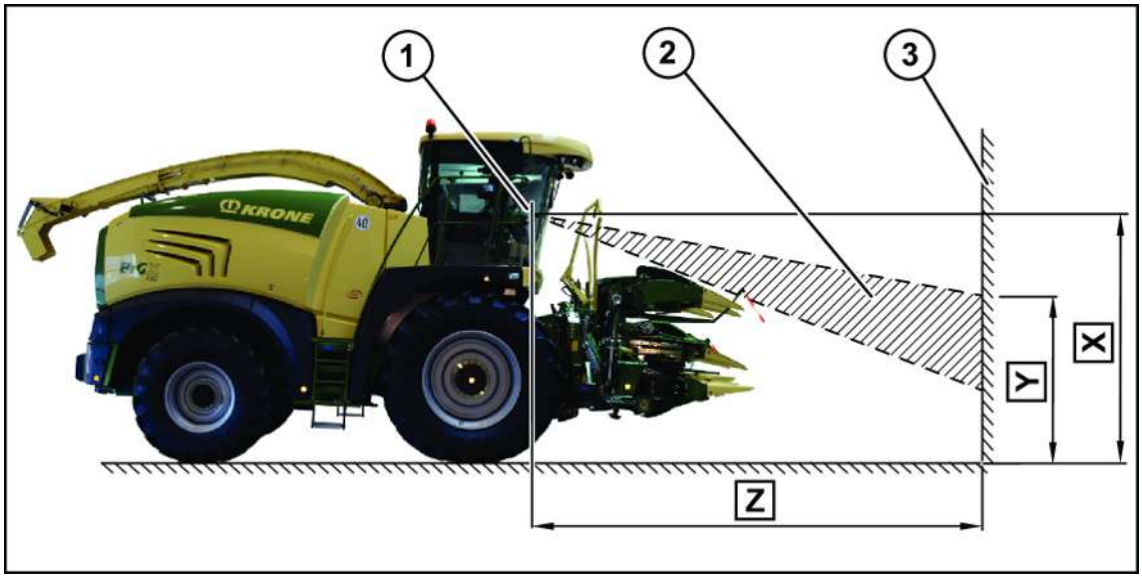

BX001-398

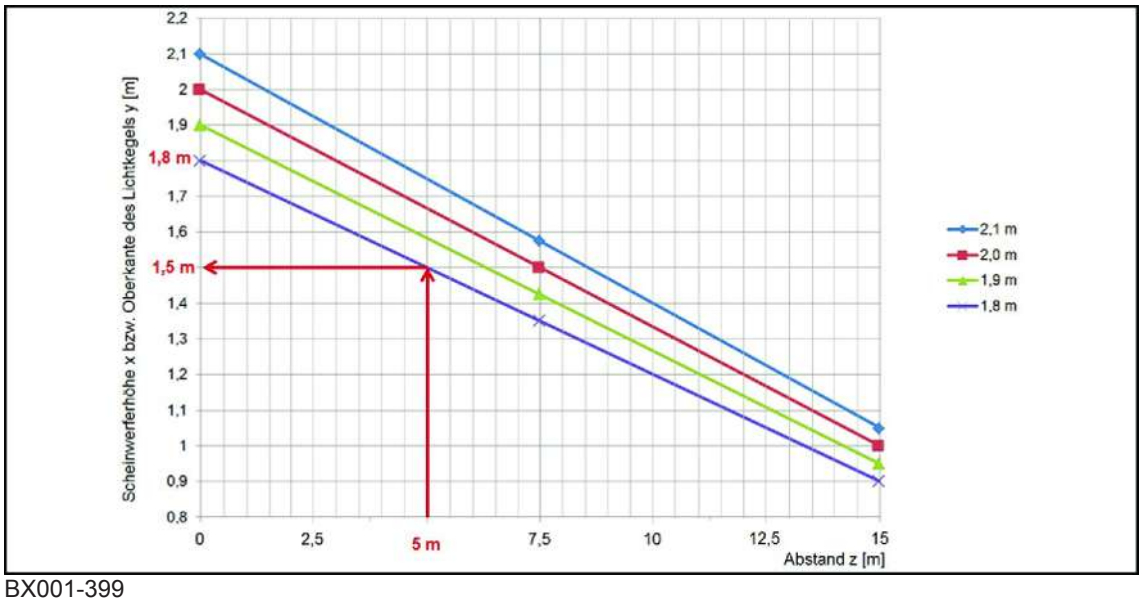

BX001-399

To determine the dimension for the upper edge (Y) of the light cones (2) from the graph:

- Check the tyre pressure, *refer to page 71*.
- Measure the height (X) of the headlights (1) above the ground.
- Select the line which matches the measured height X. (In the example of X=1.8 m it is the violet line).
- Position the forage harvester at a distance (Z) of 2.5 to 15 m in front of a vertical wall (3) and measure the distance (Z) between headlight and wall. (Example: 5 m).
- On the graph go vertically upwards from dimension Z until the line associated dimension X is crossed (example: violet line).
- From this point on the graph go to the left and read off dimension Y on the graph axis (example: 1.5 m).

To adjust the headlights on the forage harvester:

- Switch on the dipped beam on the forage harvester.

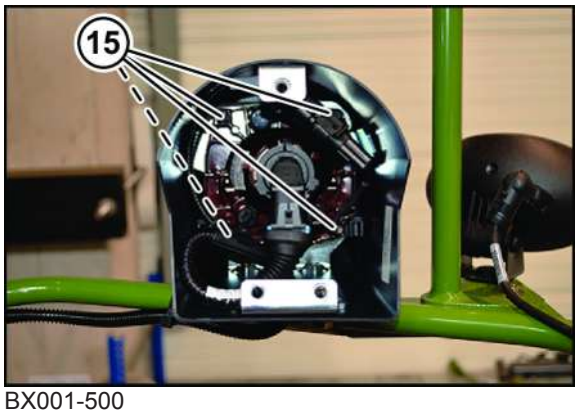

BX001-500

- Adjust the left and right headlights with the 4 setting screws (15) until the upper edge of the light cones on the wall is dimension Y.

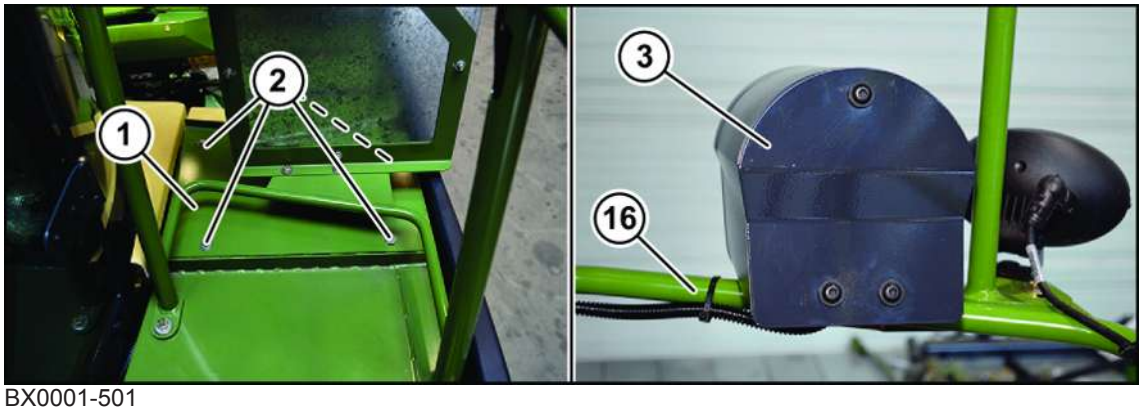

BX0001-501

On both sides of the machine:

- Attach the cover (3) to the housing.
- Secure the entire cable with cable ties (16).
- Mount the maintenance cover (1) with the screws (2).

11 Start-up

⚠ WARNING

Risk of injury due to non-observance of relevant safety instructions

If the relevant safety instructions are not observed, persons may be seriously injured or killed.

- To avoid accidents, the relevant safety instructions must be read and observed, *refer to page 19*.

⚠ WARNING

Risk of injury due to non-observance of safety instructions

If the relevant safety routines are not observed, persons may be seriously injured or killed.

- The safety routines must be read and observed to avoid accidents, *refer to page 34*.

11.1 Check before start-up

INFORMATION

Compliance with the stipulated checks on the machine significantly increases the safety and the lifetime of the machine.

A machine with established defects must not be operated.

- If it is established that the machine has defects, shut down the machine and eliminate these defects or have them eliminated by technicians.
- Before starting up the machine, carry out the inspections listed below and the checks from the maintenance table "Every 10 hours, at least daily", *refer to page 418*.

General

- ✓ There are no leakages present in the machine.
- ✓ All cable and plug connections are properly connected and laid.
- ✓ All hoses are properly laid.
- ✓ The safety devices are mounted and checked for completeness and damage.
- ✓ The header has been correctly mounted and provided with appropriate safety devices, EasyFlow *refer to page 305*, EasyCollect *refer to page 321*, XCollect *refer to page 313*.
- ✓ The platforms, steps and standing areas are clean and in proper condition, *refer to page 56*.
- ✓ The wheel chocks are at hand and ready to use, *refer to page 56*.
- ✓ The horn is functioning properly, *refer to page 80*.
- ✓ The fire extinguisher is functioning properly, *refer to page 466*.

Cabin

- ✓ The position of the mirror and the camera are set, outside mirror *refer to page 91*, inside mirror and camera *refer to page 219*.
- ✓ The driver's seat is adjusted correctly, *refer to page 219*.
- ✓ All emergency exits are freely accessible and can be opened unhindered, *refer to page 78*.
- ✓ All windows and mirrors are cleaned.
- ✓ All wiper blades are in good condition.

Lighting and labelling

✓ The lighting and warning beacon are adjusted correctly and functioning properly, *refer to page 85*.

✓ All red-white warning panels for making the machine visible are mounted in accordance with national laws.

11.2 Setting driver’s seat

11.2.1 Air-cushioned comfort seat

⚠ WARNING

Risk of injury due to movement of the machine or machine parts!

When the control lever cannot be moved freely in all directions, it is not possible to execute all functions of the control lever. It may then not be possible to respond quickly and correctly to hazardous situations.

- ▶ After comfort seat, right armrest and steering column have been set, check whether the control lever can be moved freely in all directions.
- ▶ Adapt the setting when the control lever cannot be moved freely in all directions.

⚠ WARNING

Risk of injury due to incorrectly set driver's seat!

When the driver's seat is not adjusted individually to the driver, the driver may damage his health due to bad posture while working.

- ▶ Before starting up the machine, adjust the driver's seat ergonomically and individually to the driver.

⚠ WARNING

Danger of injury resulting from unintentional movement of machine parts

If the vibration damper has been set too softly, the seat may hit the floor when driving on a bad road and contact with the operating elements is no longer guaranteed. It may then not be possible to respond quickly and correctly to hazardous situations. Thus there is a risk of serious injuries or death.

- ▶ Always set the vibration damper of the comfort seat tightly enough to prevent the seat from hitting the floor even when driving on a bad road.

⚠ WARNING

Danger of accident due to brief distraction of the driver

If the driver adjusts the driver's seat while driving, he cannot pay adequate attention to his driving as a result. This can result in serious accidents.

- ▶ The driver’s seat must only be set when the machine has stopped.

11.2.1.1 Operating air-cushioned comfort seat (for "Standard" version)

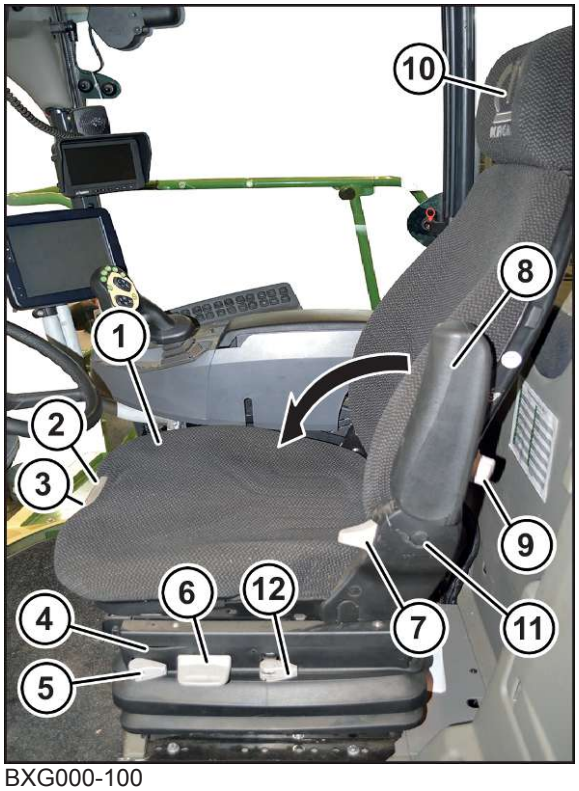

BXG000-100

1	Driver's seat	7	Adjustment of the backrest
2	Seat depth adjustment	8	Left armrest
3	Seat angle adjustment	9	Lumbar support
4	Longitudinal adjustment	10	Headrest
5	Horizontal suspension	11	Cover cap armrest adjustment
6	Height adjustment	12	Vibration damper setting

The air comfort seat (1) can be individually adapted to the requirements of the driver.

Height adjustment

The height can be adjusted continuously by means of a hydraulic system. In order to prevent damage, actuate the compressor for a maximum of 1 minute.

- ▶ Pull lever (6) completely upward.
  - ⇨ The driver's seat (1) is moved upwards.
- ▶ Press lever (6) completely down.
  - ⇨ Move driver's seat (1) downwards.
- ➡ When the upper or lower end stop of the height adjustment mechanism is reached, the height will be adjusted automatically in order to ensure a minimum spring travel.

Horizontal suspension

The shock load in direction of travel through the driver’s seat (1) is cushioned better by the horizontal suspension.

- ▶ To activate horizontal suspension, reverse lever (5) to the front.
- ▶ To deactivate horizontal suspension, reverse lever (5) to the rear.

Longitudinal adjustment

- Pull locking lever (4) up, push driver's seat (1) forward or backward into the desired position and permit the locking lever (4) to lock in place.
- Check whether the locking is fitted into place correctly. The driver's seat must no longer be movable into another position.

Seat angle adjustment

- Pull the key (3) up and set the inclination of the seat base by simultaneously increasing or decreasing the pressure on the seat base.

Seat depth adjustment

- Pull key (2) up and move seat base to the desired position by moving it forward and backward simultaneously.

Adjustment of the backrest

- Pull locking lever (7) up, set the inclination of the backrest and allow the locking lever (7) to engage.
- Check whether the locking is fitted into place correctly. Make sure that the backrest cannot be moved.

Weight adjustment

In order to prevent damage to health, the individual driver’s weight setting should be checked and adjusted prior to starting up the machine. The setting should be carried out whilst sitting absolutely stationary.

- Briefly pull the lever (6) upwards.

Headrest

The headrest has been optimally set when the upper edges of the head and headrest are at the same height.

- Pull out or push in the headrest (10) over the perceptible notches until the correct height has been reached.

Lumbar support

- Turn the hand wheel (9) to the left or right in order to individually adjust the height as well as the intensity of the arching in the backrest.

Adjusting the vibration damper

The vibration behaviour of the driver's seat can be optimally adjusted to each driving situation from "soft" to "hard" using the infinitely adjustable vibration damper.

- Pull (12) lever upwards to set soft seating comfort.
- Pull (12) lever downwards to set hard seating comfort.

Setting the left armrest

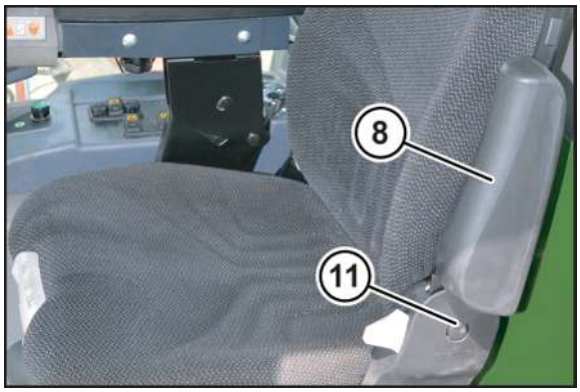

BM000-047

Tilt the armrest (8) up or down as requested.

- ▶ Remove cover cap (11) to adjust the armrest height.
- ▶ Loosen hexagon nut, move armrest into desired position and tighten hexagon nut.
- ▶ Press cover cap (11) on hexagon nut.

Setting the right armrest

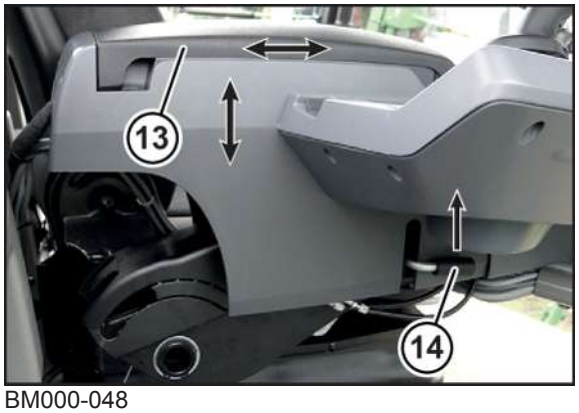

BM000-048

The right armrest (13) and the control lever form a unit.

- ▶ To set the right armrest, raise lever (14).
- ▶ Fold right armrest up or down, forward or backward and release the lever (14).
- ➡ The setting remains the same.

11.2.1.2 Operating air-cushioned comfort seat (for "ACTIVO" version)

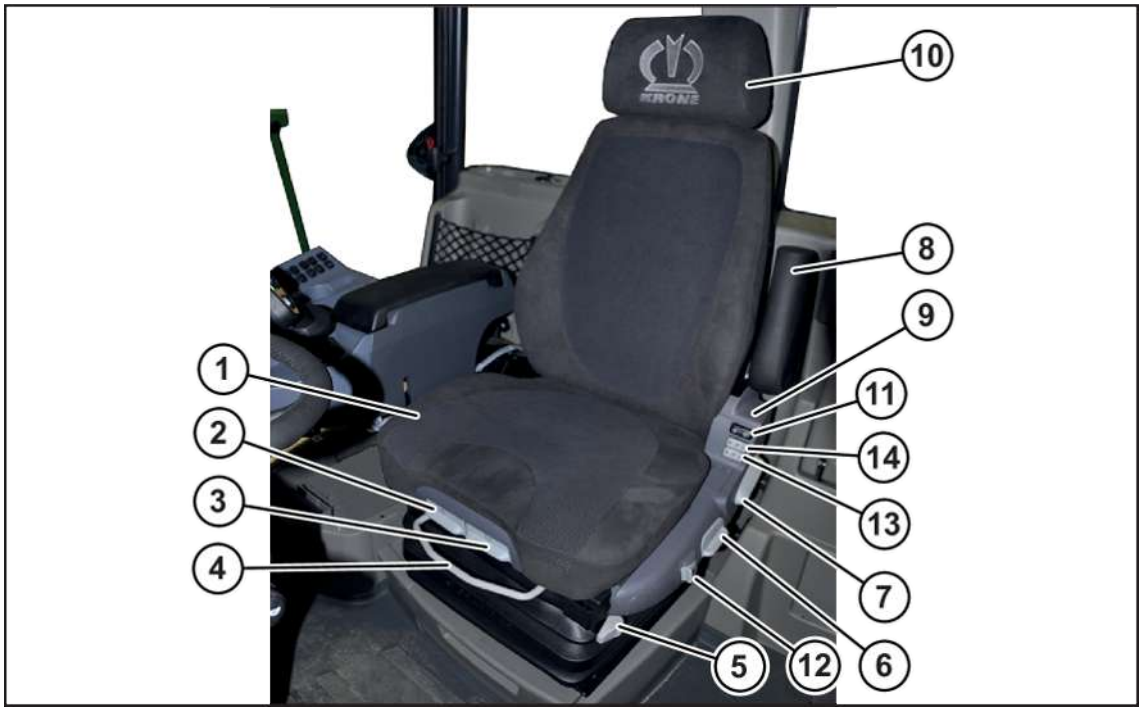

BXG000-099

1	Air-cushioned comfort seat	8	Left armrest
2	Seat depth adjustment	9	Seat heating and air conditioning on/off
3	Seat angle adjustment	10	Headrest
4	Longitudinal adjustment	11	Cover cap armrest adjustment

5	Horizontal suspension on/off	12	Vibration damper setting
6	Weight and height setting	13	Lumbar support setting at bottom
7	Adjustment of the backrest	14	Lumbar support setting at top

The air comfort seat (1) can be individually adapted to the requirements of the driver.

Height adjustment

The height can be adjusted continuously by means of a hydraulic system. In order to prevent damage, actuate the compressor for a maximum of 1 minute.

- ▶ Pull lever (6) completely upward.
  - ⇨ The driver's seat (1) is moved upwards.
- ▶ Press lever (6) completely down.
  - ⇨ Move driver's seat (1) downwards.
- ➡ When the upper or lower end stop of the height adjustment mechanism is reached, the height will be adjusted automatically in order to ensure a minimum spring travel.

Horizontal suspension

The shock load in direction of travel through the driver’s seat (1) is cushioned better by the horizontal suspension.

- ▶ To activate horizontal suspension, reverse lever (5) to the front.
- ▶ To deactivate horizontal suspension, reverse lever (5) to the rear.

Longitudinal adjustment

- ▶ Pull locking lever (4) up, push driver's seat (1) forward or backward into the desired position and permit the locking lever (4) to lock in place.
- ▶ Check whether the locking is fitted into place correctly. The driver's seat must no longer be movable into another position.

Seat angle adjustment

- ▶ Pull the key (3) up and set the inclination of the seat base by simultaneously increasing or decreasing the pressure on the seat base.

Seat depth adjustment

- ▶ Pull key (2) up and move seat base to the desired position by moving it forward and backward simultaneously.

Adjustment of the backrest

- ▶ Pull locking lever (7) up, set the inclination of the backrest and allow the locking lever (7) to engage.
- ▶ Check whether the locking is fitted into place correctly. Make sure that the backrest cannot be moved.

Weight adjustment

The weight is automatically adjusted when the seat is loaded by the driver.

Setting the vibration damper

BM000-050

The oscillating behaviour of the driver's seat can be adapted ideally to each driving situation via the adjustable vibration damper.

Damping level II is the default setting recommended by the manufacturer at average driver's weight.

The lever (12) for the setting of the oscillating behaviour has three settings:

Pos.	Explanation
I	Soft damping
II	Medium damping
III	Hard damping

- To set the vibration damper, turn lever (12) to desired stage and release it.

The damping behaviour can be coordinated between the damping levels by two additional setting positions each.

Lumbar support

BM000-051

The intensity of the arching of seat backrest can be adapted individually so that the spine is supported and the pressure on the back is relieved.

- In order to adapt the intensity of the arching in the upper area of the backrest, press „+“ or „-“ on switch (14) until the desired setting is reached.
- In order to adapt the intensity of the arching in the lower area of the backrest, press on “+” or “-” on switch (13) until the desired setting is reached.

Seat heating and seat climate control

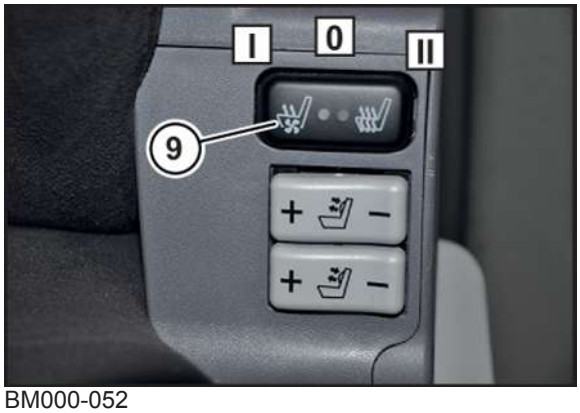

BM000-052

The seat surface can be vented via seat climate control so that a cool and dry seating is enabled.

The switch (9) has three positions:

Pos.	Explanation
0	Seat heating and seat climate control OFF
I	Seat climate control ON (seat heating OFF)
II	Seat heating ON (seat climate control OFF)

- ▶ In order to switch on seat climate control, switch the switch (9) to position I.
- ➡ The left light indicates the operation of seat climate control.
- ▶ To switch on the seat heating, switch the switch (9) to position II.
- ➡ The right lamp indicates the operation of the seat heating.

Setting the left armrest

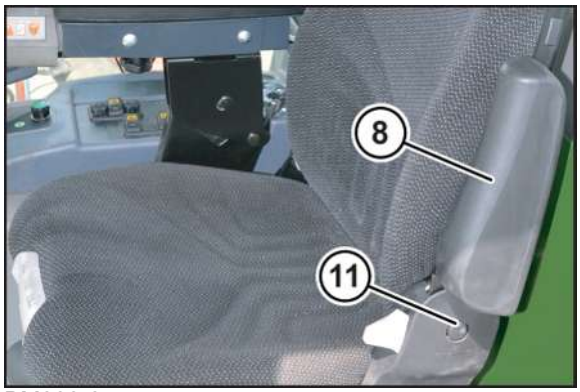

BM000-047

Tilt the armrest (8) up or down as requested.

- ▶ Remove cover cap (11) to adjust the armrest height.
- ▶ Loosen hexagon nut, move armrest into desired position and tighten hexagon nut.
- ▶ Press cover cap (11) on hexagon nut.

Setting the right armrest

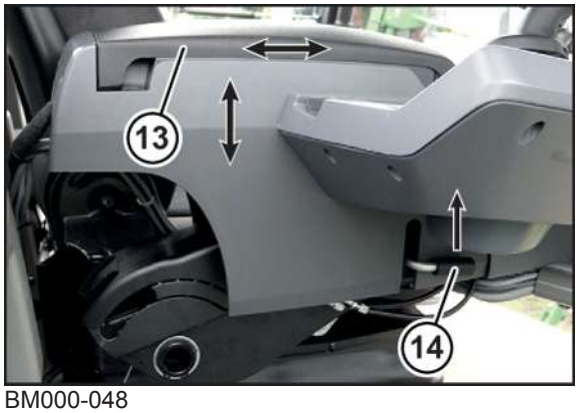

BM000-048

The right armrest (13) and the control lever form a unit.

- To set the right armrest, raise lever (14).
- Fold right armrest up or down, forward or backward and release the lever (14).
- ➡ The setting remains the same.

11.2.2 Steering column adjustment

BM000-054

- To adjust the inclination of the steering column around the lower pivot point (a), actuate the unlocking pedal (1) and move the steering column (3) into the required position.
- To lock the steering column (3), release the unlocking pedal (1).
- To adjust the height of the steering wheel (c) and the inclination of the steering column around the upper pivot point (b), release the release lever (2) and move the steering column (3) into the required position.
- To lock the steering column (3), lock the release lever (2).

11.2.3 Setting the terminal

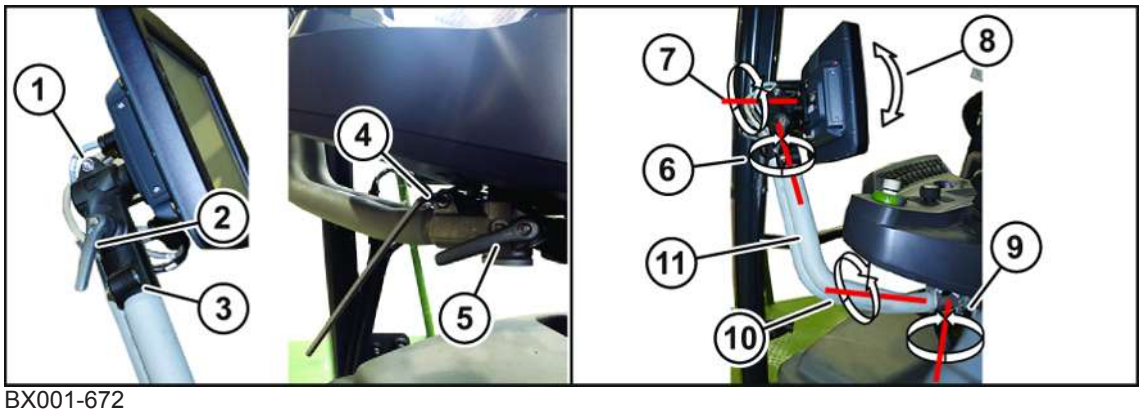

BX001-672

The position of the terminal can be adjusted to the driver and to the visible conditions of the header by turning the support (11) and the terminal.

Adjusting the inclination of the terminal forwards/backwards:

- Loosen the lever (2) and adjust the inclination of the terminal forwards/backwards (8).
- Tighten the lever (2).

Adjusting the inclination of the terminal sideways:

- Loosen the screw (1) and adjust the inclination of the terminal sideways (7).
- Tighten the screw (1).

Rotating the terminal to the left/right:

- Loosen the screw (3) and rotate the terminal to the left/right (6).
- Tighten the screw (3).

Adjusting the height of the terminal:

- Loosen the screw (4) and rotate (10) the support (11) until the required height has been reached.
- Tighten the screw (4).

Swivelling the terminal to the left/right:

- Loosen the lever (5) and swivel the support (11) to the left/right (9).
- Tighten the lever (5).

11.2.4 Monitor for camera monitoring

For "Additional camera" version

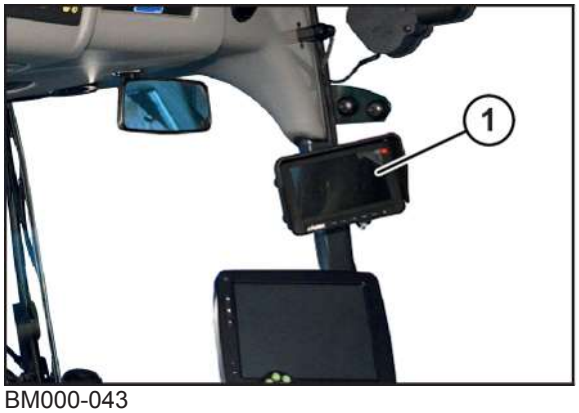

BM000-043

- Manually adjust the monitor (1) for the camera monitoring system so that the road and the working area at the side and behind the machine are in full view.

POC function

The POC function (Power on Control) of the additional camera automatically switches on the monitor as soon as the ignition is turned to step "II". The POC function is activated in the factory and can be deactivated as necessary.

- Press  on the monitor.

EQ002-382

- Press  until "POC" (1) is selected.
- To deactivate the POC function, press  .
- To select "Close" press  .
- To leave the menu, press  .
- To activate the POC function again, follow a similar procedure.

INFORMATION

Even if the POC function is deactivated, the monitor automatically switches on during reversing. After reversing is completed, the monitor automatically switches off.

- For further information see the manufacturer's operating manual.

11.2.5 Sun visor

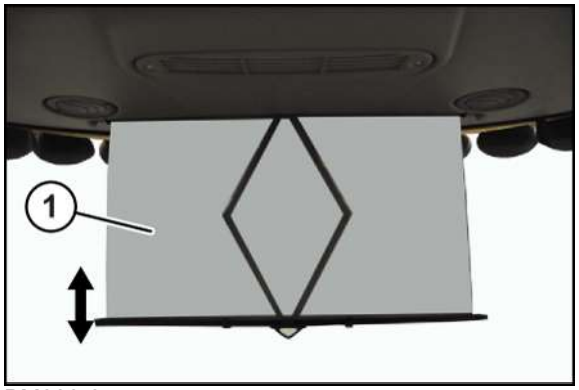

BM000-044

- Manually adjust the position of the sun visor (1) as required.

11.2.6 Adjustable air nozzles

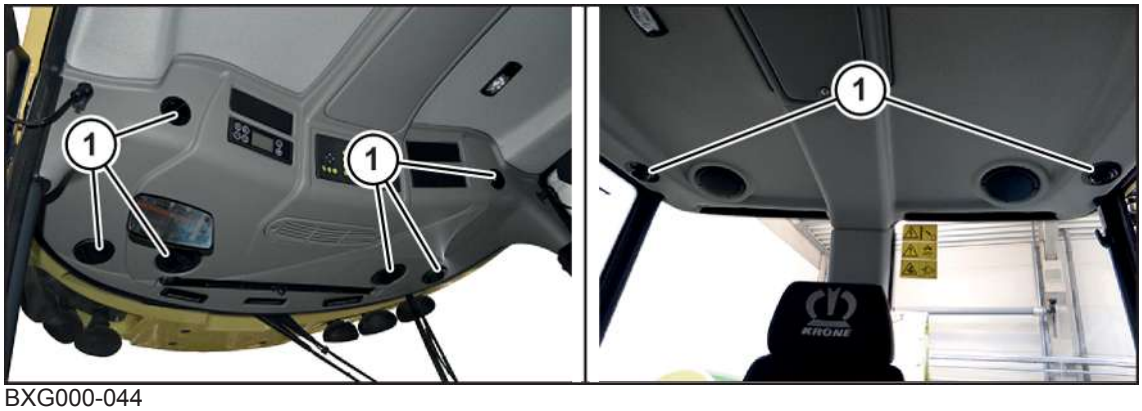

BXG000-044

Adjust the air nozzles (1) to prevent the discs from misting over.

11.2.7 Inside rear mirror

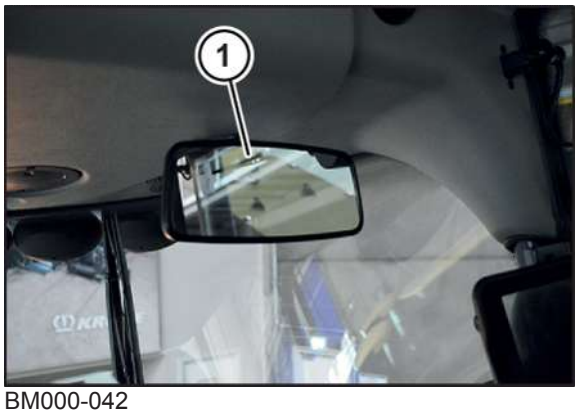

BM000-042

- Manually set the inside rear mirror (1) so that the required outside area is visible in the mirror.

11.3 General aspects

11.3.1 Instructional seat

⚠ WARNING

Danger of accident due to distraction of the driver

The driver may be distracted by a second person in the cabin, possibly causing him not to pay adequate attention to his driving. This may result in serious accidents with personal injury.

- The passenger seat may only be used while the driver is being instructed.
- While the machine is being operated, there must be no other person in the cabin or on the machine except for the driver, unless the driver is being instructed.

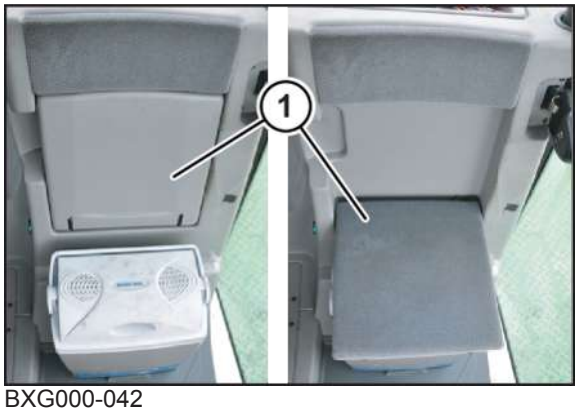

BXG000-042

- Before using the passenger seat (1), fold down its seating area.

11.3.2 Cooling box (version with "Insulated thermobox")

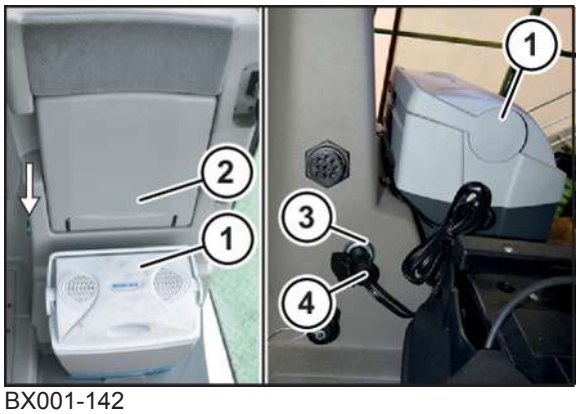

BX001-142

The cooling box (1) is located below the instructional seat (2) in the cabin.

- To use the cooling box, connect the 12 V plug (4) to the 12 V socket (3) on the left next to the driver's seat.

11.3.3 Drawer for first-aid kit and operating instructions

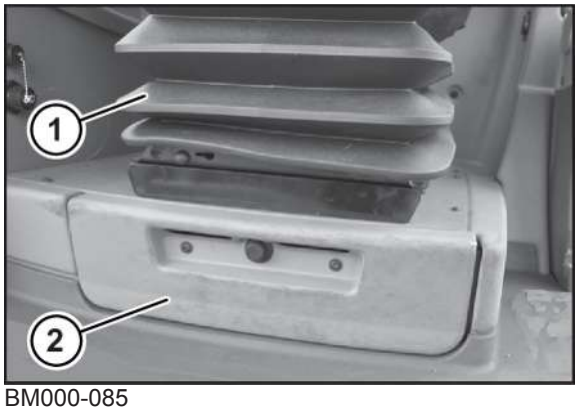

BM000-085

The drawer (2) for the first-aid kit and the operating instructions is located below the front of the driver’s seat (1).

- To remove the first-aid kit or the operating instructions, pull the drawer (2) forwards.

12 Start-up – Grass mode/direct cut header

⚠ WARNING

Risk of injury due to non-observance of relevant safety instructions

If the relevant safety instructions are not observed, persons may be seriously injured or killed.

- ▶ To avoid accidents, the relevant safety instructions must be read and observed, *refer to page 19*.

⚠ WARNING

Risk of injury due to non-observance of safety instructions

If the relevant safety routines are not observed, persons may be seriously injured or killed.

- ▶ The safety routines must be read and observed to avoid accidents, *refer to page 34*.

This chapter describes the conversion from maize mode to grass mode/direct cut header.

Grass mode only

Prerequisites for grass mode or for operation using a direct cut header:

- ✓ The corn conditioner has been removed, *refer to page 233*.
- ✓ The clamping bar has been installed, *refer to page 238*.
- ✓ The grass channel has been installed, *refer to page 239*.
- ✓ The ventilation slot has been set, *refer to page 240*.
- ✓ The hydraulic system has been set to grass mode, *refer to page 241*, for direct cut header: the hydraulic system has been set to operation with direct cut header, *refer to page 241*.
- ✓ The grain capture sheet has been removed, *refer to page 242*.
- ✓ The conveyor bars of the pre-compression roller have been mounted so that the smooth side is used, *refer to page 509*.
- ✓ The chopping blades for grass mode have been mounted, *refer to page 493*.
- ✓ The counterblade for grass mode has been mounted, *refer to page 506*.
- ✓ The EasyFlow header has been mounted, *refer to page 305*.
- ✓ The season setting in the terminal has been adjusted to grass mode, *refer to page 209*.
- ✓ The spout extension has been removed, *refer to page 242*.
- ✓ The camera on the auto-loading system is mounted in the grass mode/direct cut header position (version with "Auto-loading system"), *refer to page 244*.
- ✓ The rear weight has been removed, *refer to page 246*.
- ✓ The additional axle has been removed, *refer to page 248*.
- ✓ The lifting unit has been calibrated, *refer to page 187*

12.1 Removing corn conditioner

Overview

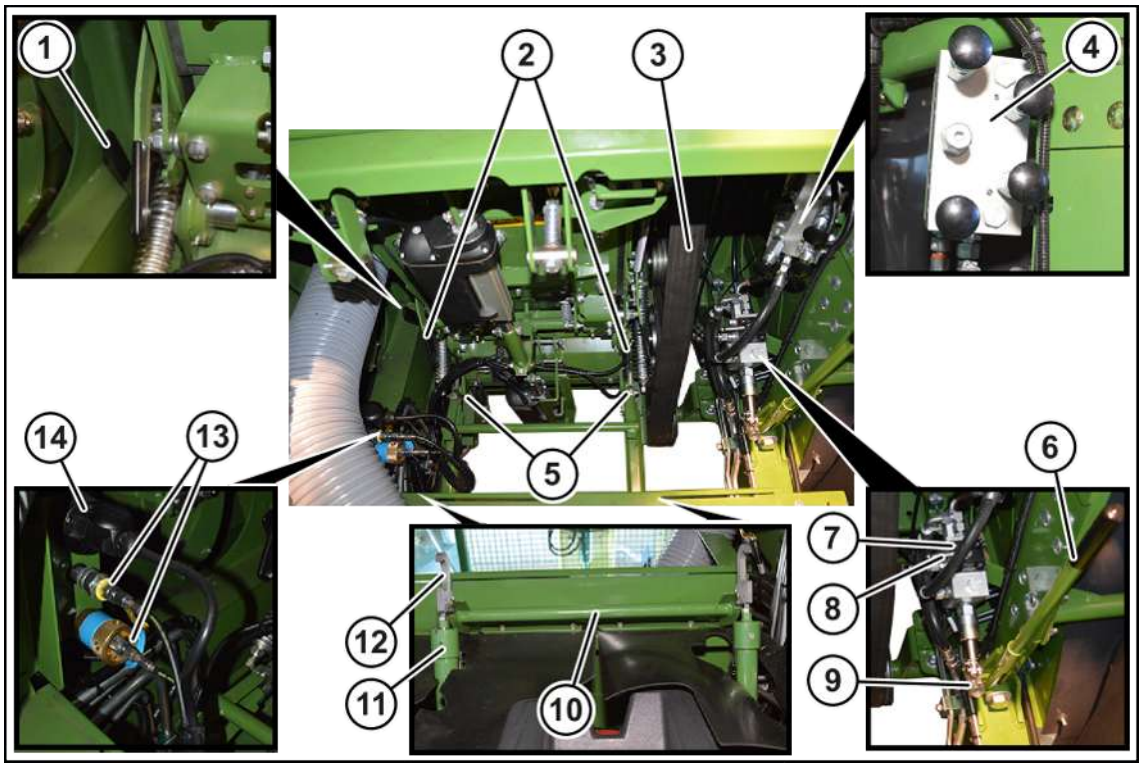

BX001-502

1	Locking lever swivel device	9	Holder for lever
2	Locking lever corn conditioner/grass channel	10	Cylinder retainer
3	Kraftband	11	Cylinder
4	Hydraulic block corn conditioner	12	Catch hook
5	Holder for catch hook	13	Lubrication line
6	Lever for hand pump	14	Power supply cable
7	Hand pump		
8	Switching valve on hand pump		

Functions on the control block of the corn conditioner

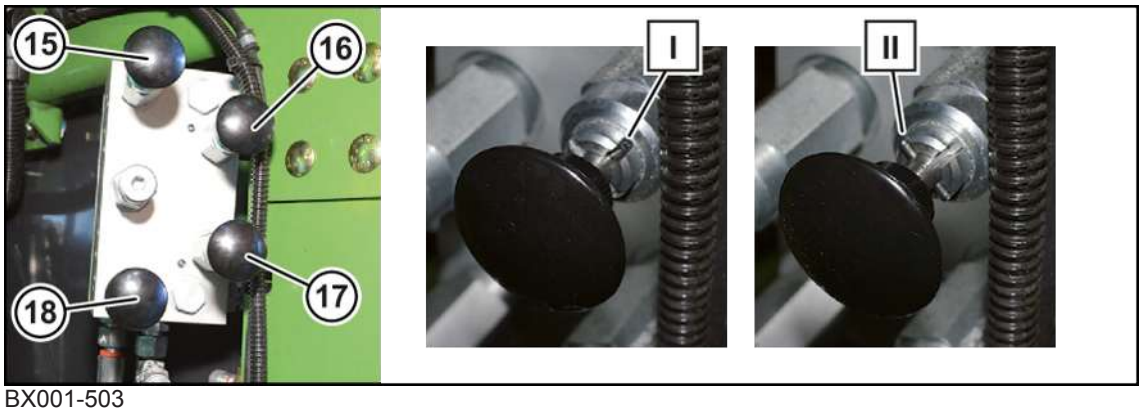

BX001-503

15	Retract cylinder	17	Raise swivel device
16	Extend cylinder	18	Lower swivel device

I = The valve is locked. The roll pin is in the deep groove.

I = The valve is released. The roll pin is in the flat groove.

Access to the corn conditioner/grass channel

The corn conditioner or the grass channel is accessed from the right side of the machine, behind the side hood on the right.

Prerequisites for installation and removal

- The side hood on the right is open.
- The rear axle has been completely raised using the keypad.
- The machine is shut down and secured, *refer to page 34*.

Dismounting the crop flow cover

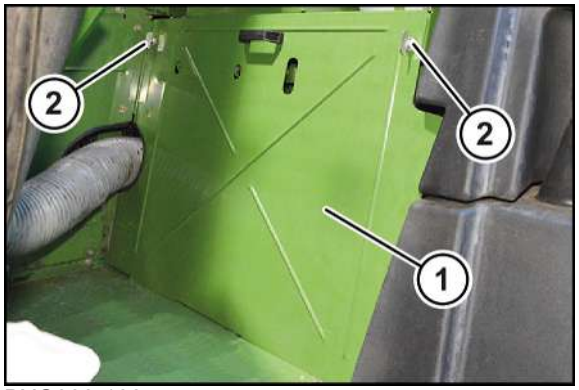

BXG000-108

▶ To remove the cover (1), unlock the quarter turn fasteners (2).

Set down the cover (1) outside the machine.

Removing kraftband

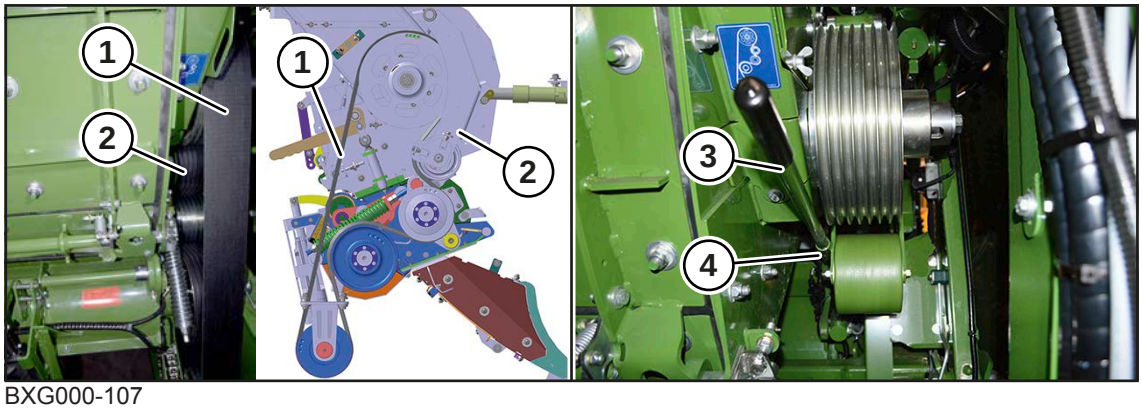

BXG000-107

▶ In order to be able to remove the kraftband (1), insert the manual lever (3) into the sleeve (4) on the tensioning arm (2) and press the tensioning arm (2) down towards the front.

▶ Remove the kraftband (2).

▶ Remove the manual lever (3).

Detaching the power cable/lubrication lines

NOTICE
Damage to power supply cable and lubrication lines caused by moving corn conditioner. By moving the corn conditioner, cables and lines that are not disconnected or put down properly could be jammed or torn off. ▶ Ensure that the power supply cable and the lubrication line cannot be jammed or demolished.

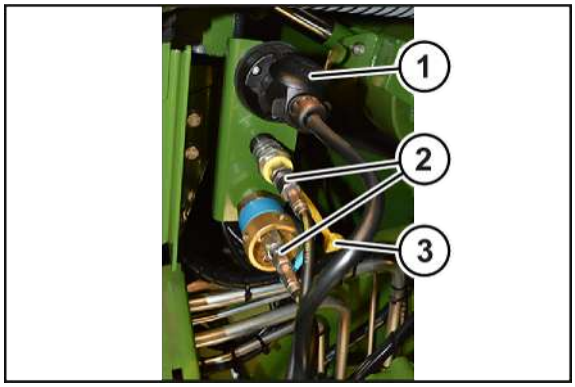

BX001-506

- ▶ Remove the power cable (1).
- ▶ Unscrew the lubrication lines (2).
- ▶ Screw the black cover (3) onto the distributor block, screw the yellow cover (3) onto the upper lubrication line (2).
- ▶ Place the power cable (1) and the lubrication lines (2) on the corn conditioner.

Moving the corn conditioner to the rear

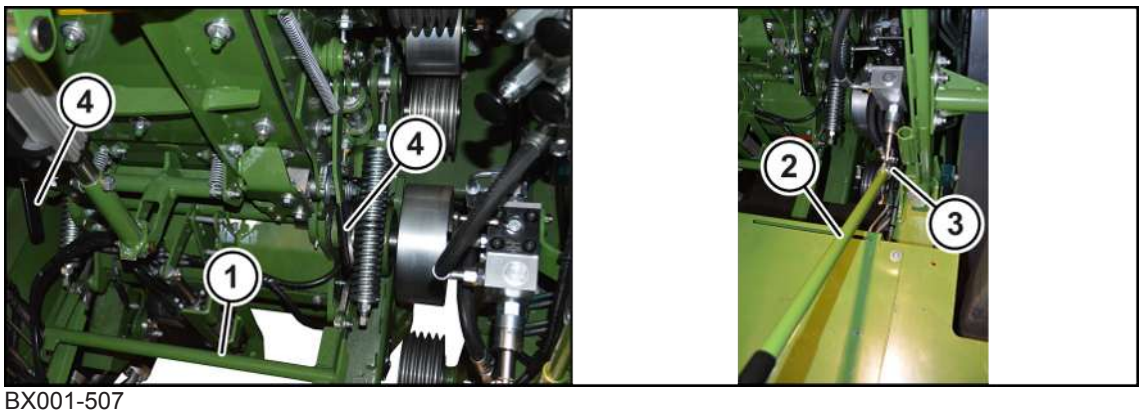

BX001-507

- ▶ Loosen the valve (16), lock the valves (17, 18, 19), *refer to page 233*.

WARNING! There is a crush hazard if the corn conditioner is not secured with the catch hooks (13) of the cylinders (12), as the corn conditioner may fall out unintentionally when released. Before releasing the corn conditioner, ensure that the catch hooks of the cylinders are hooked into the holders (5) of the corn conditioner.

- ▶ To release the corn conditioner, swivel the lever (4) upwards, on the right and left.

NOTICE! When retracting the cylinders, the cylinder holder may catch on the cylinders. This may damage the components. When retracting the cylinders, observe the cylinder holder and raise manually if required.

- Place the lever for the hand pump (2) in the holder (3) of the hand pump.
- Move the corn conditioner backwards, by pumping the hand lever, until the corn conditioner can no longer be moved.
- Check whether the grass channel has been installed.

If the grass channel has not been installed,

- raise the cylinder holder and place the cylinders in the holder.

If the grass channel has been installed

Disconnect the grass channel from the corn conditioner.

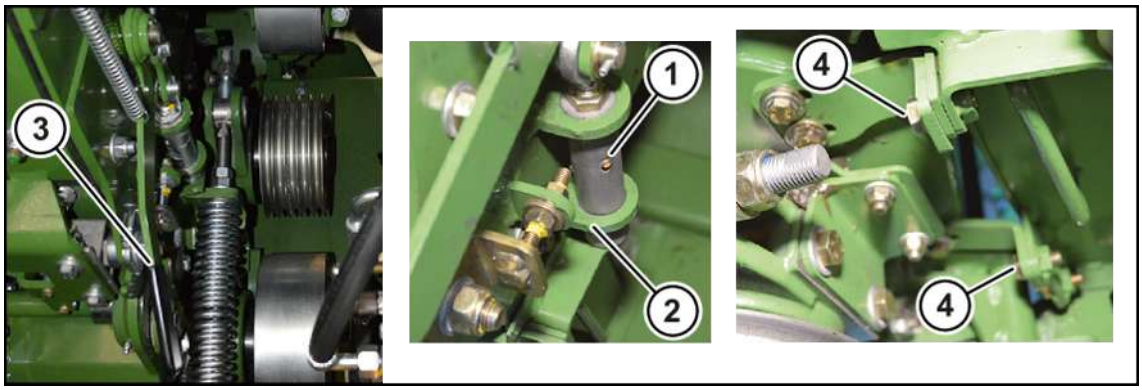

BX001-508

- Move the corn conditioner backwards by pumping the hand pump lever until the bolt (1) can be inserted into the lock (2) of the grass channel.
- To lock the grass channel, swivel the lever (3) downwards, right and left side.
- To disconnect the corn conditioner from the grass channel, remove two screw connections (4) on the right and left.
- Raise the cylinder holder and place the cylinders in the holder.

Checking retaining bolt of grass channel

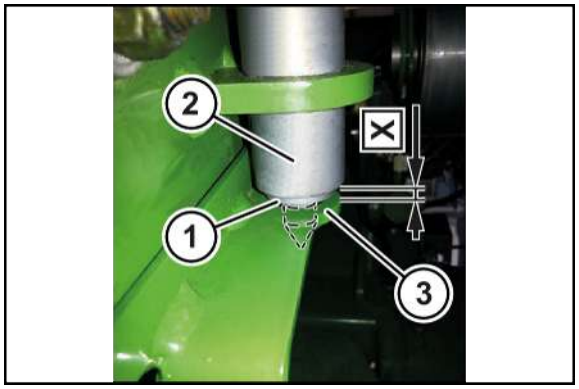

BX001-509

Checking retaining bolt of grass channel/corn conditioner:

- Make sure that the retaining bolt of grass channel/corn conditioner (1) rests on both sides on the grass channel or corn conditioner (3).
- Check dimension X.
  - ⇨ If the dimension is X=4-6 mm, the grass channel is properly attached.
  - ⇨ If the dimension is not X=4-6 mm, the retaining bolt must be adjusted, *refer to page 411*.

Swivelling the corn conditioner downwards

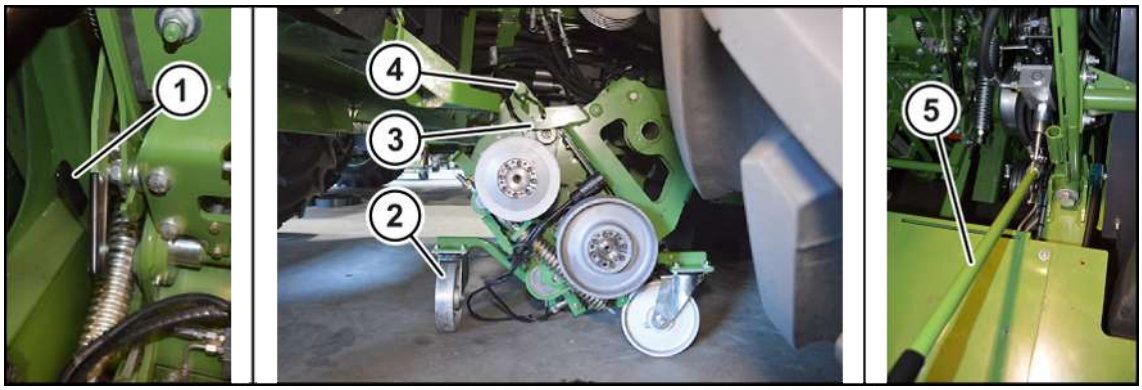

BX001-510

- Loosen the valve (18), lock the valves (16, 17, 19), *refer to page 233*.
- To release the swivel device, swivel the locking lever (1) forwards and simultaneously pump the hand pump lever several times.
- Lower the corn conditioner until the distance between the corn conditioner and the ground is approx. 30 cm.
- Lock the valve (18).
- Attach and secure the support roll (2).

The support rolls (2) are in the tool box of the machine.

- Loosen the valve (18).
- Lower the corn conditioner until the catch hooks (3) are under the holding fixtures (4).
- Pull out the corn conditioner to the right side.
- Store the corn conditioner in a safe place for subsequent re-installation.

Swivelling in the swivel device

- Loosen the valve (19), lock the valves (16, 17, 18),*refer to page 300*.
- Swivel up the swivel device by making pumping movements until the swivel device engages.

The swivel device is engaged when the pumping movement becomes noticeably more difficult.

Checking that the swivel device is locked

- Loosen the valve (18), lock the valves (16, 17, 19),*refer to page 300*.
- Pump the hand pump lever.
  - ⇨ If the swivel device does not lower, the swivel device is correctly locked.
  - Locking the valves (16, 17, 18, 19), *refer to page 233*.
  - ⇨ If the swivel device lowers, swivel in the swivel device again.

12.2 Removing grass channel, if installed

If the grass channel is installed:

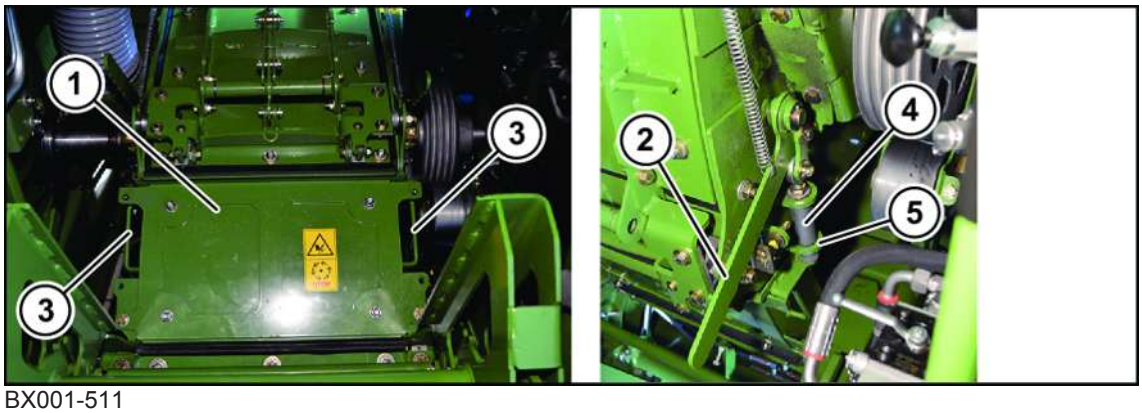

BX001-511

- To unlock the grass channel (1), swivel the lever (2) upwards, right and left.
- Pull out the grass channel by the handles (3).
- Put the grass channel (1) to one side.

12.3 Installing terminal strip

For an overview of the tightening torques, *refer to page 424*.

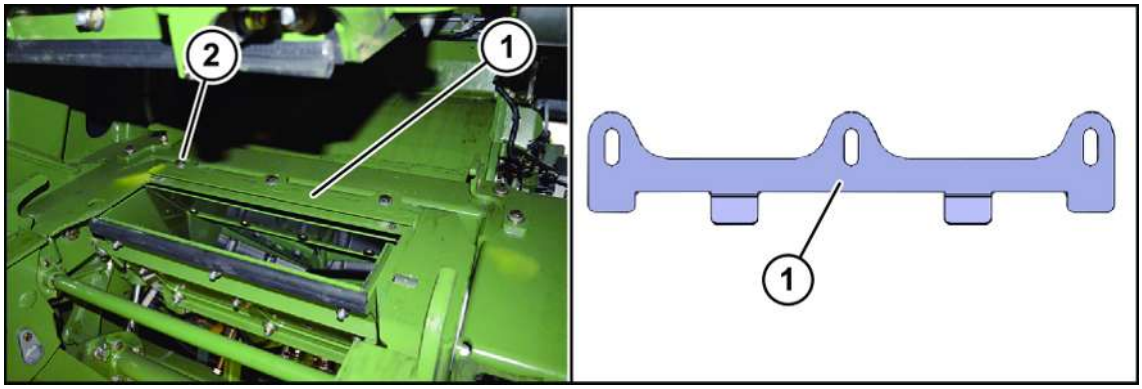

BX001-512

- Install the terminal strip (1) and loosely mount the screws.
- Push the grass channel all the way into the chute.
- Pull out the grass channel by the handles.
- Tighten screws (2).

12.4 Installing grass channel

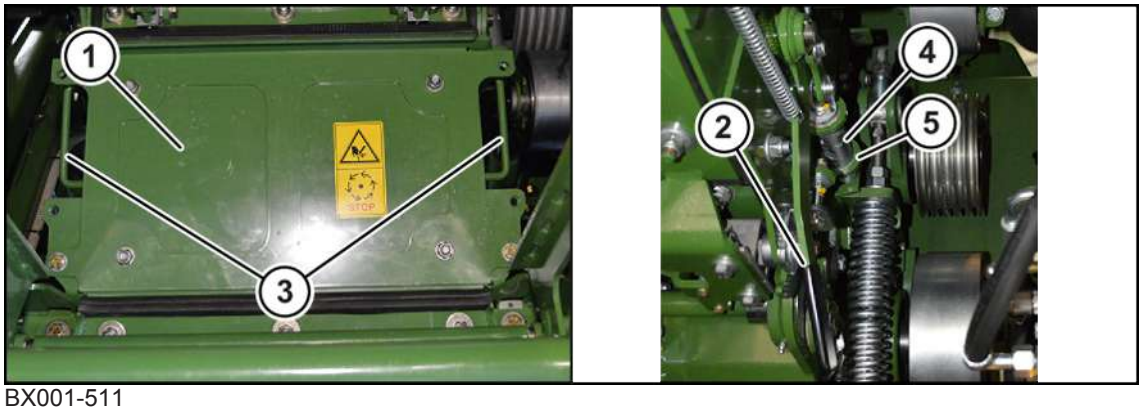

BX001-511

- Swivel lever (2) upward, right and left.
- Push the grass channel (1) by the handles (3) into the chute until the pins (4) can be inserted into the locking (5).
- To lock the grass channel, swivel the lever (2) downwards, on right and left.

Checking retaining bolt of grass channel

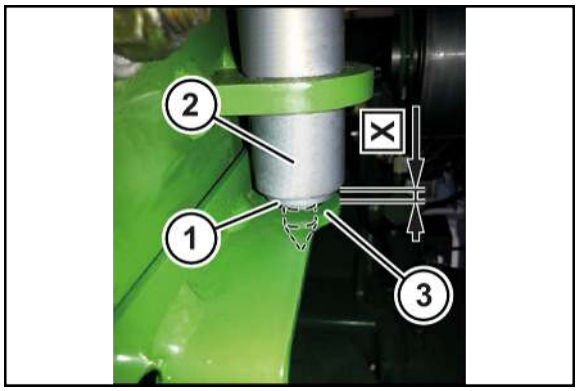

BX001-509

Checking retaining bolt of grass channel/corn conditioner:

- Make sure that the retaining bolt of grass channel/corn conditioner (1) rests on both sides on the grass channel or corn conditioner (3).
- Check dimension X.
  - ⇨ If the dimension is X=4-6 mm, the grass channel is properly attached.
  - ⇨ If the dimension is not X=4-6 mm, the retaining bolt must be adjusted, *refer to page 411*.

12.5 Adjusting ventilation slot

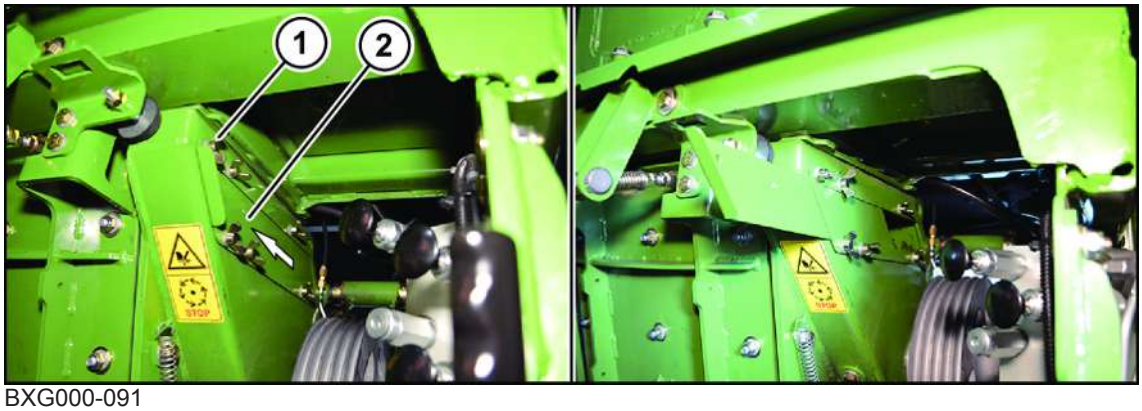

BXG000-091

The ventilation slot is closed at the factory.

Open the ventilation slot no further than half way. If the ventilation slot's opening is too large, too much air is directed against the air flow in the chopping drum. This may impair the discharge capacity.

Adjusting the ventilation slot cover

- Loosen the wing nuts (1).
- Pull the cover sheet (2) backwards to the required position.
- Tighten the wing nuts (1).

Mounting the crop flow cover

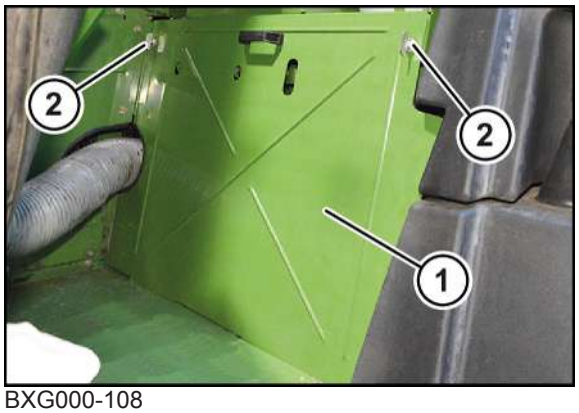

BXG000-108

- Attach the cover (1) and lock with the quarter turn fasteners (2).

12.6 Setting Lifting Unit Hydraulics

Switching the lifting unit to grass mode

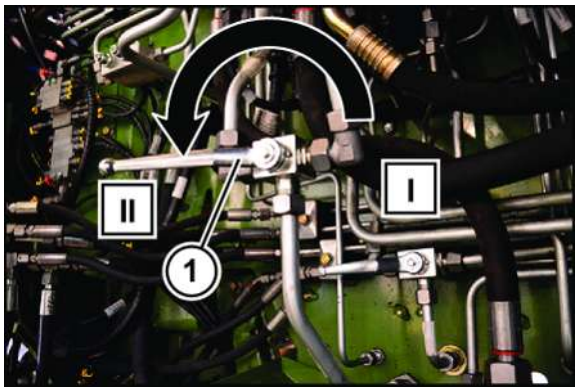

BXG000-092

The three-way ball cock (1) for switching between maize and grass mode is located under the left side hood.

- Position I = maize mode, operation with direct cut header
- Position II = grass mode

To switch the hydraulic system to grass mode:

▶ Bring the machine to a standstill.

▶ Lower the header to the ground.

▶ Move the three-way ball cock to position II.

Switching lifting unit to maize mode or to operation with direct cut header

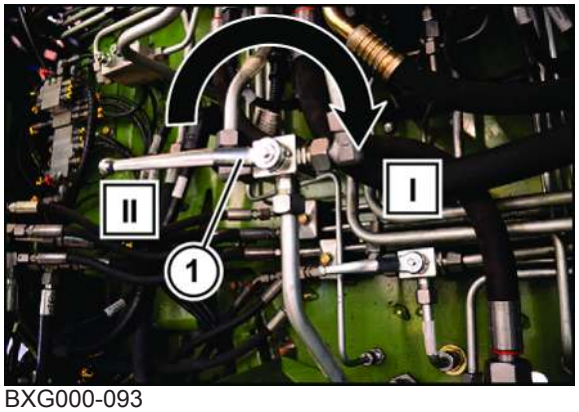

BXG000-093

The three-way ball cock (1) for switching between maize and grass mode is located under the left side hood.

- Position I = maize mode, operation with direct cut header
- Position II = grass mode

To switch the hydraulic system to maize mode or to operation with direct cut header:

▶ Bring the machine to a standstill.

▶ Lower the header to the ground.

▶ Move the three-way ball cock to position I

12.7 Removing grain capture sheet

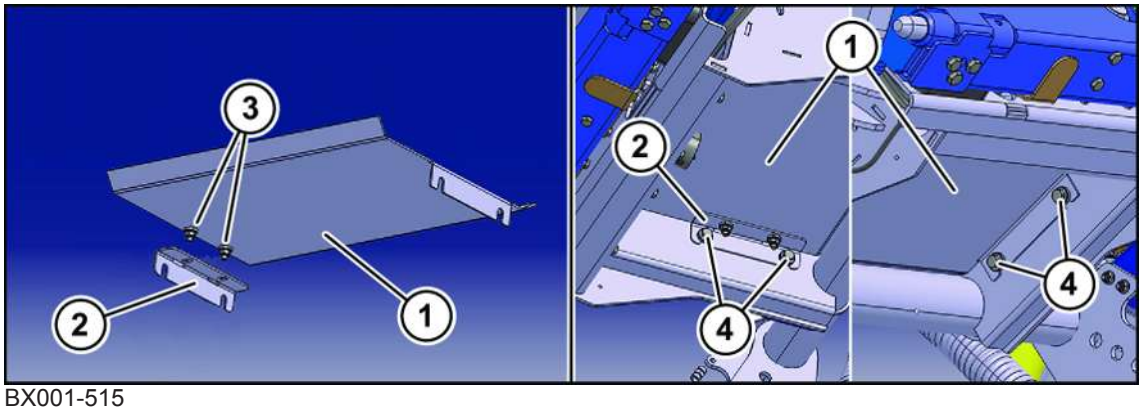

BX001-515

To dismount the grain capture sheet:

- Loosen coach screws (3), discs, detent edged washers and locknuts to screw angle (2) and grain capture sheet (1).
- Unscrew the hexagon head screws, detent edged washers and discs (4) and remove the grain capture sheet.

Store the grain capture sheet with screw connection material in a safe place for subsequent reinstallation.

12.8 Removing spout extension

⚠ WARNING

Risk of injury due to non-observance of relevant safety instructions

If the relevant safety instructions are not observed, persons may be seriously injured or killed.

- To avoid accidents, the relevant safety instructions must be read and observed, *refer to page 19*.

⚠ WARNING

Risk of injury due to non-observance of safety instructions

If the relevant safety routines are not observed, persons may be seriously injured or killed.

- The safety routines must be read and observed to avoid accidents, *refer to page 34*.

⚠ WARNING

Risk of injury from suspended load

There is a danger for persons due to falling load.

- Pay attention to sufficient carrying load of the hoist.
- Do not stay under the suspended load.
- If work has to be performed under the load, securely support the load.

Removing 8 / 10-row spout extension

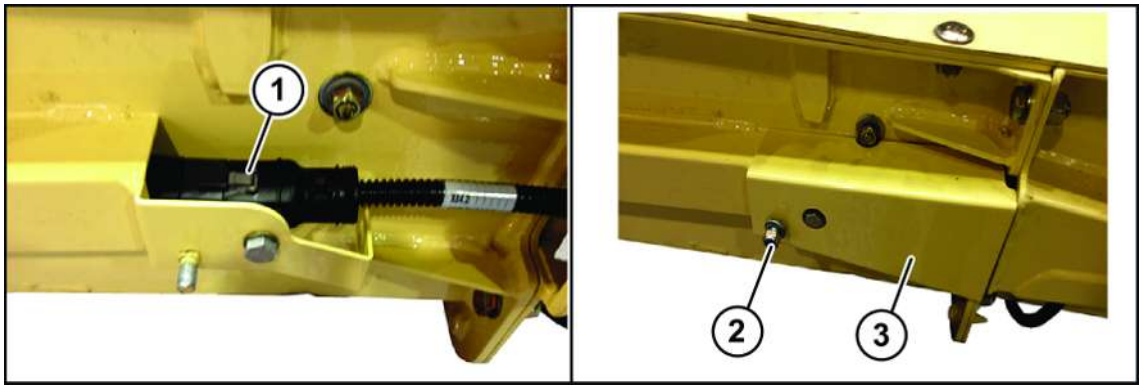

BX001-633

✓ The spout is located on the right side of the machine and is fully lowered.

✓ The spout flap has been completely opened.

✓ The hydraulic circuits are depressurised.

✓ The machine is shut down and secured, *refer to page 34*.

▶ Unscrew the nut (2) and remove the cover (3).

▶ Detach the plug connection (1).

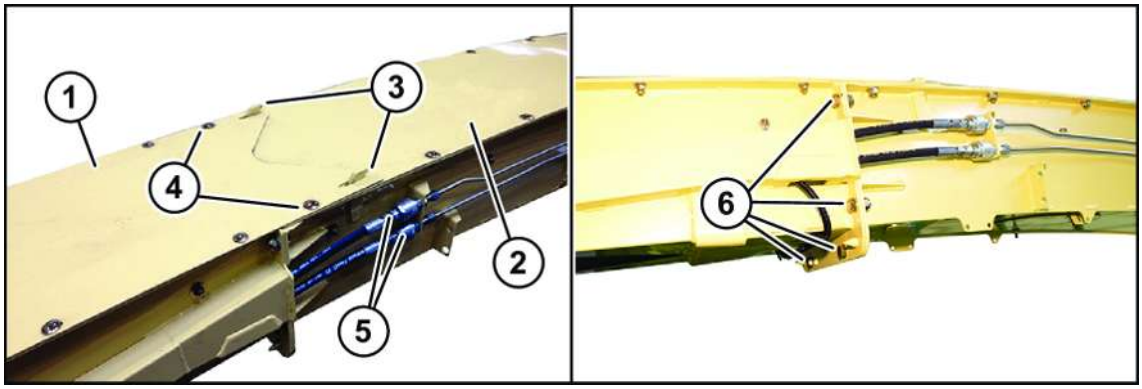

BX001-632

▶ Disconnect the hydraulic hoses (5) from the hydraulic lines.

▶ **NOTICE! The weight of the "8-row spout extension" is approx. 80 kg. The weight of the "10-row spout extension" is approx. 112 kg.** Pick up the spout extension (1) using a suitable load handling attachment.

▶ Remove the screws (4, 6).

▶ Detach the spout extension (1) from the supports (3) of the "spout basic" (2) and lift to the side.

▶ Attach the required spout extension, *refer to page 262*.

Removing 12 / 14-row spout extension

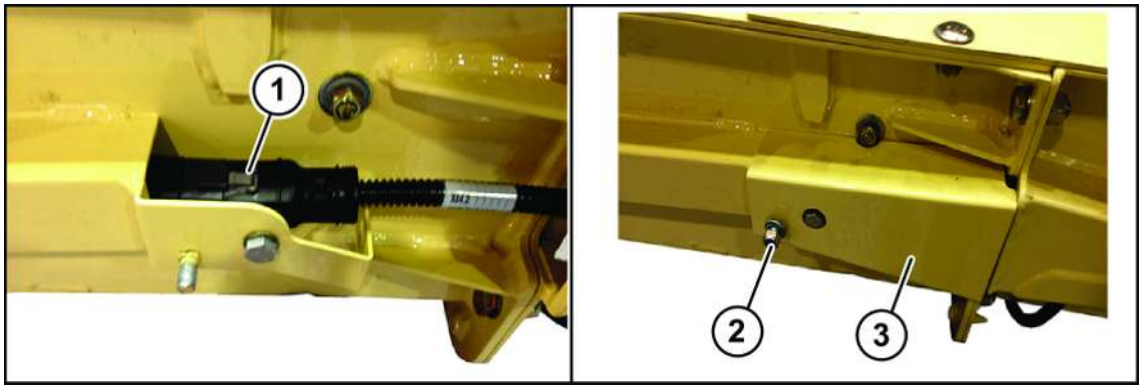

BX001-633

- ✓ The spout is located on the right side of the machine and is fully lowered.
- ✓ The spout flap has been completely opened.
- ✓ The spout extension has been folded in.
- ✓ The hydraulic circuits are depressurised.
- ✓ The machine is shut down and secured, *refer to page 34*.
- ▶ Remove the nuts (2) and remove the cover (3).
- ▶ Detach the plug connection (1).

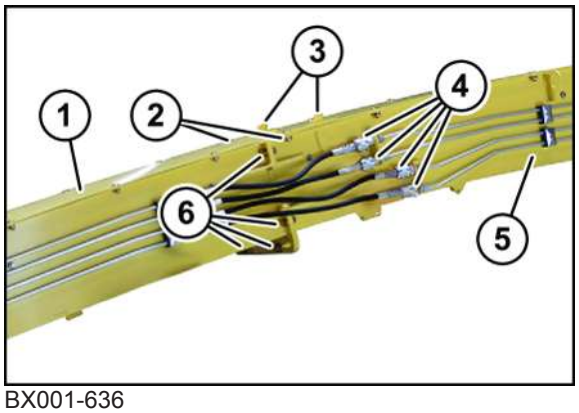

BX001-636

- ▶ Disconnect the hydraulic hoses (4) from the hydraulic lines.
- ▶ **NOTICE! The weight of the "12-row spout extension" is approx. 165 kg. The weight of the "14-row spout extension" is approx. 180 kg.** Pick up the spout extension (1) using a suitable load handling attachment.
- ▶ Remove the screws (2, 6).
- ▶ Detach the spout extension (1) from the supports (3) of the spout basic (5) and lift to the side.
- ▶ Attach the required spout extension, *refer to page 262*.

12.9 Mounting camera into grass mode position (for "auto-loading system" version)

NOTICE
If there are no hole pattern or screw points for mounting the camera onto the spout, see instructions for accessories kit B386 "Auto-loading system" (150 001 104_01).

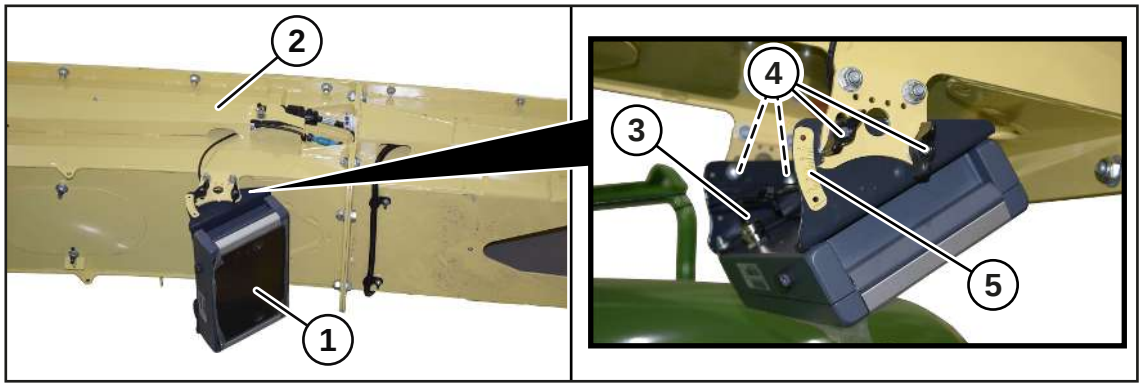

BX002-060

- If the camera is mounted in maize mode position, dismount the camera, *refer to page 245*.
- Mount the camera (1) in the illustrated position using the screws (4).
- Set the camera (1) to 0° using the inclination scale (5).
- Connect the camera cable (3), lay it in the cable duct (2) and secure it with cable ties.
- Calibrate the spout, *refer to page 198*.

12.10 Dismounting camera when in maize mode position (for "auto-loading system" version)

Spout end piece 8/10 rows

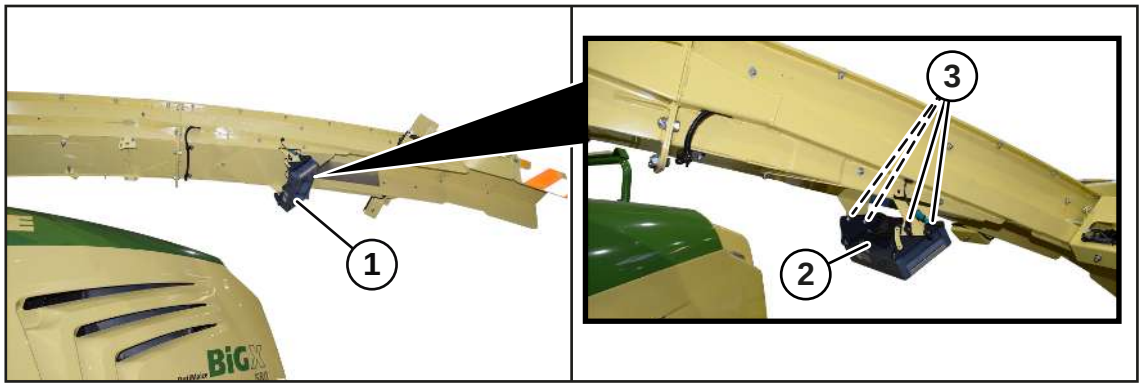

BX002-281

- Disconnect the camera cable (2) from the camera (1).
- Unscrew the screws (3) and remove the camera (1).

Spout end piece 12/14 rows

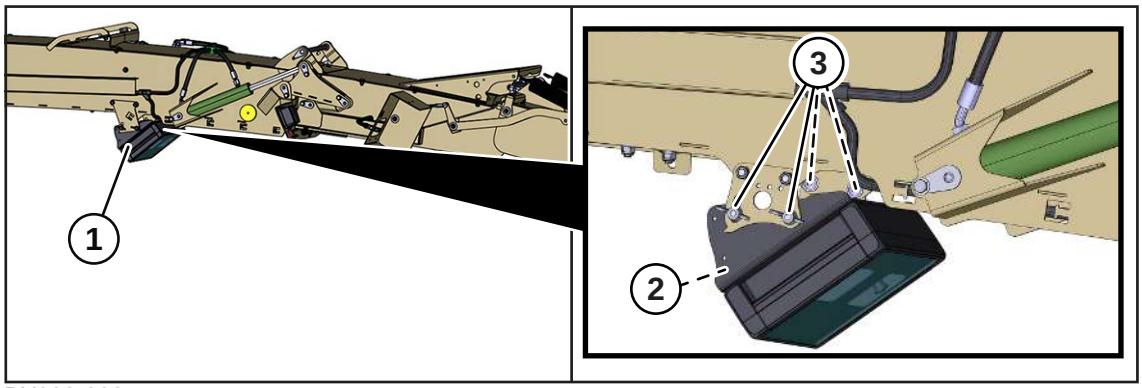

BX002-282

- Disconnect the camera cable (2) from the camera (1).
- Unscrew the screws (3) and remove the camera (1).

12.11 Removing rear weight

⚠ WARNING

Risk of injury from suspended load

There is a danger for persons due to falling load.

- Pay attention to sufficient carrying load of the hoist.
- Do not stay under the suspended load.
- If work has to be performed under the load, securely support the load.

⚠ WARNING

Risk of injury due to unexpected movements when the machine is operating

If the rear weight and the front-mounted EasyCollect or XCollect header are not coordinated with each other, there is a risk that the machine may overturn when braking or when driving on slopes.

- Do not drive the machine on the road or use it for work unless the rear weight, stipulated for the combination of machine and fitted header, has been mounted.

Removing rear weight

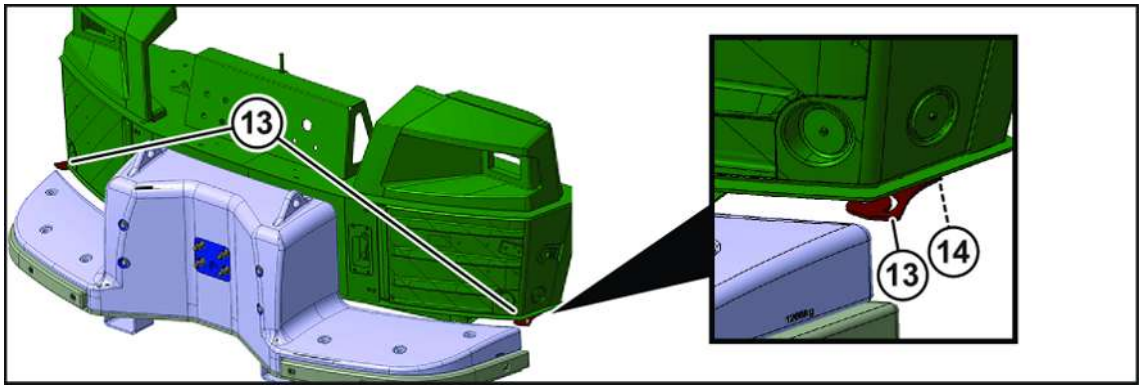

BX001-646

✓ The machine is shut down and safeguarded, *refer to page 34*.

▶ Loosen the screws (14) on the scrapers (13).

▶ Completely push back the scrapers (13) over the oblong holes and tighten the screws (14).

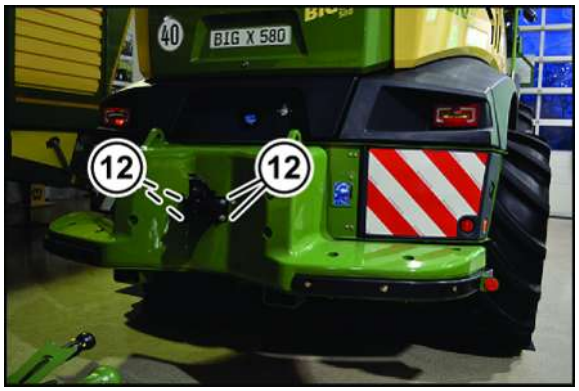

BX001-547

▶ Unscrew the nuts (12) and remove the tow coupling.

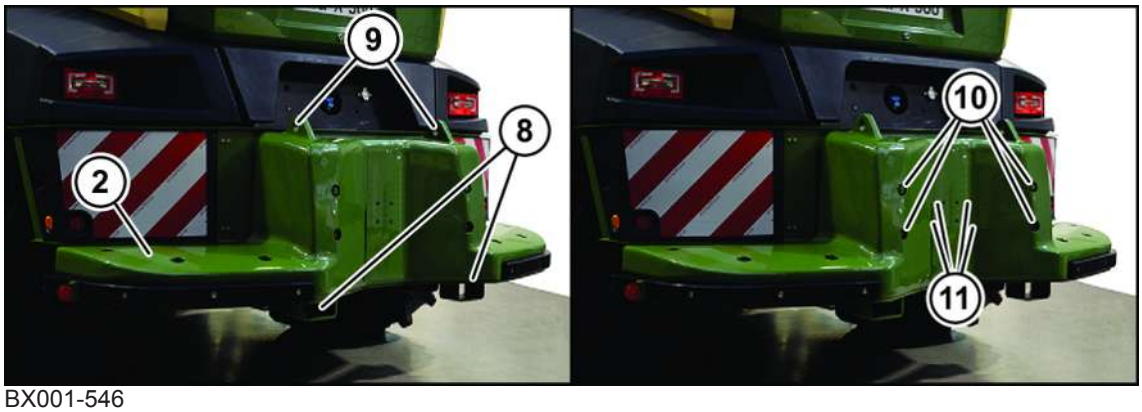

BX001-546

NOTICE! The rear weight has a maximum weight of approx. 2900 kg depending on the features of the machine.

▶ Pick up the rear weight (2) using a suitable hoist.

In doing so,

- use the openings for a forklift (8) and
- use the suspension points for a lifting beam (9)

.

Ensure that the hoist has been correctly attached to the suspension points.

- Remove the screws (10) and the threaded rods (11) and carefully lift the rear weight (1) to the side.

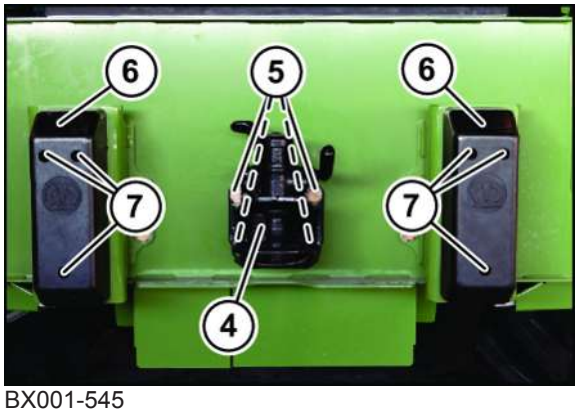

BX001-545

- Attach the tow coupling (4) using the 4 screws (5).
- Attach the rubber buffers (6) with 3 screws each (7).
- Check the tyre pressure, *refer to page 463*.

12.12 Removing additional axle

⚠ WARNING

Risk of injury from suspended load

There is a danger for persons due to falling load.

- Pay attention to sufficient carrying load of the hoist.
- Do not stay under the suspended load.
- If work has to be performed under the load, securely support the load.

Removing additional axle with one person

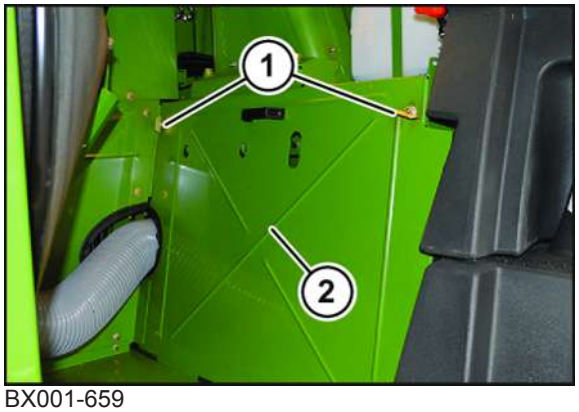

BX001-659

✓ The header is removed.

✓ The rear axle is in the top position.

✓ The machine is shut down and safeguarded,*refer to page 247*.

✓ The swivel device of corn conditioner is swivelled up.

- Loosen the lock bolt (1) by turning it and remove the cover (2).

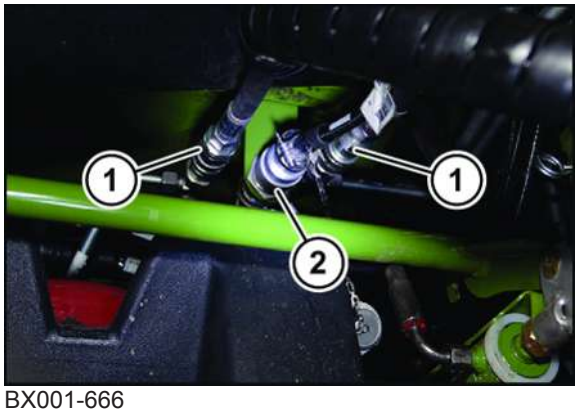

BX001-666

- Disconnect the hydraulic hoses (1).
- Disconnect the plug connection (2).

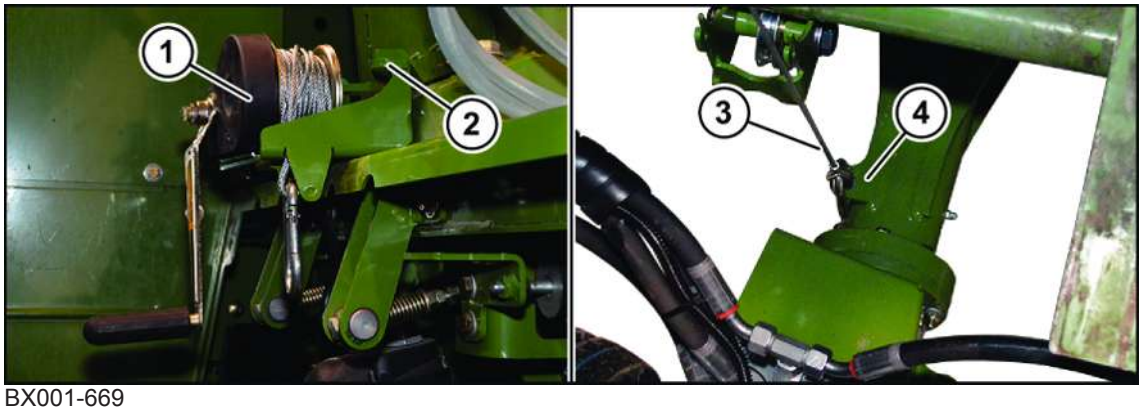

BX001-669

- Centre a pallet for supporting the additional axle under the additional axle.
- Hook the cable winch (1) into the holder (2).
- Hook the cable (3) into the rear towing ring (4) and pretension slightly.

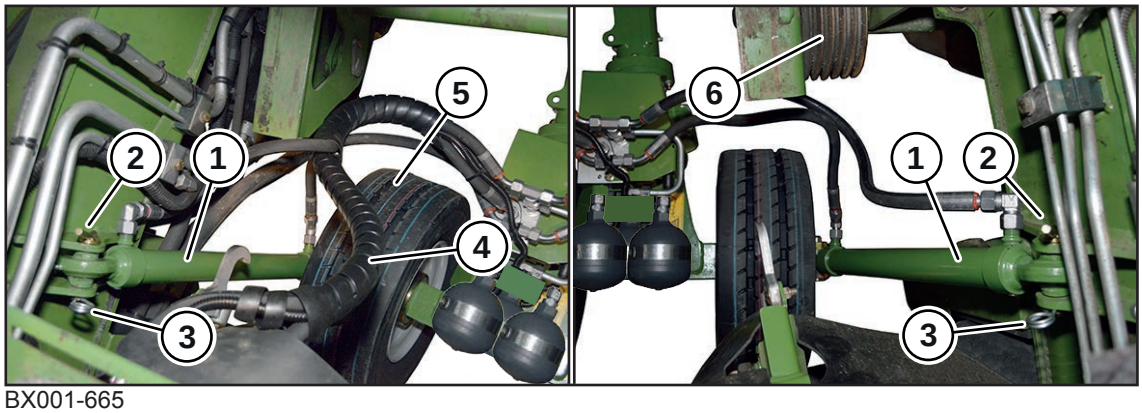

BX001-665

- Remove the spring cotter pins (3).
- Remove the bolts (2) and deposit the hydraulic cylinders (1) to the side.
- Completely lower the additional axle using the cable winch and detach the cable.

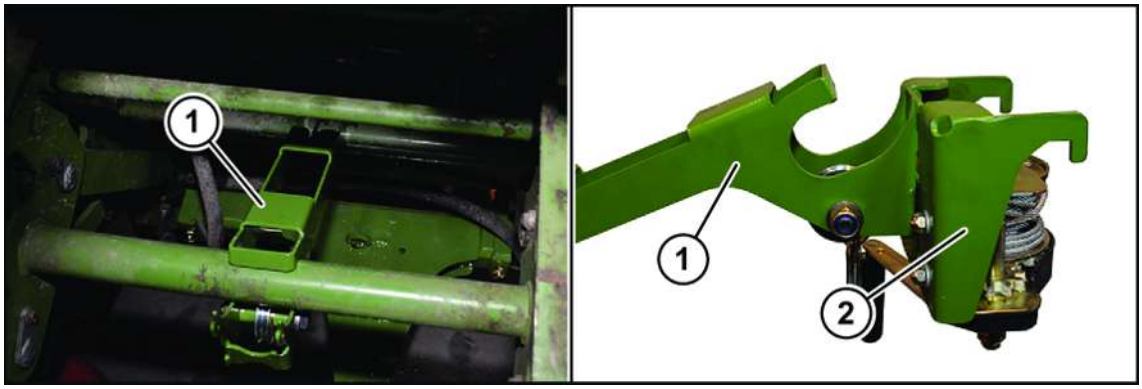

BX001-667

- Hook the deflection (1) centred above the additional axle into the swivel device of the corn conditioner.
- Hook the cable winch (2) into the deflection (1)

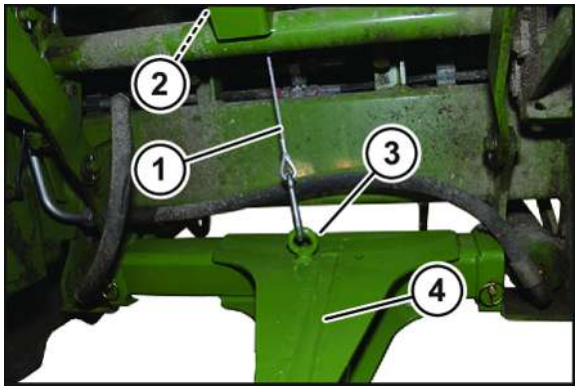

BX001-668

- Guide the cable (1) above the deflection roll (2).
- Hook the cable (1) into the front towing ring (3) of the additional axle (4) and pretension the cable (1) slightly.

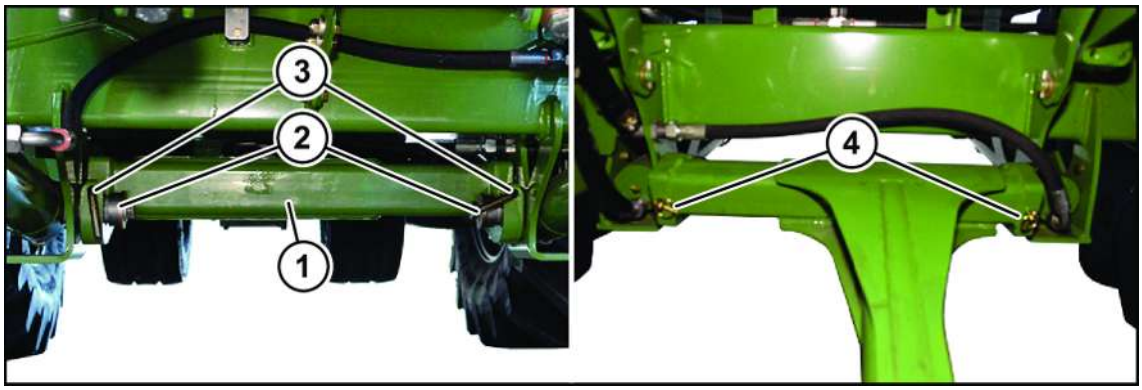

BX001-663

- Remove the linch pins (4).
- Remove the bolts (3) and completely lower the additional axle using the cable winch.
- Detach and wind up the cable.

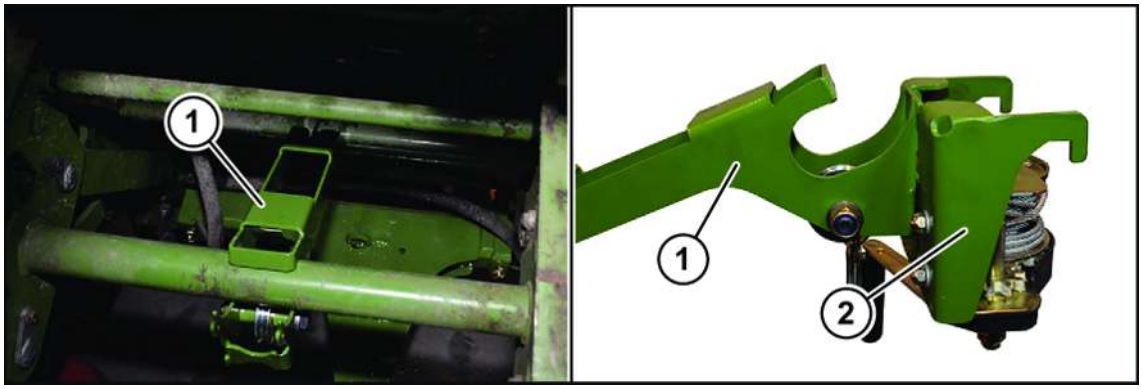

BX001-667

- Detach the cable winch (2) and the deflection (1).

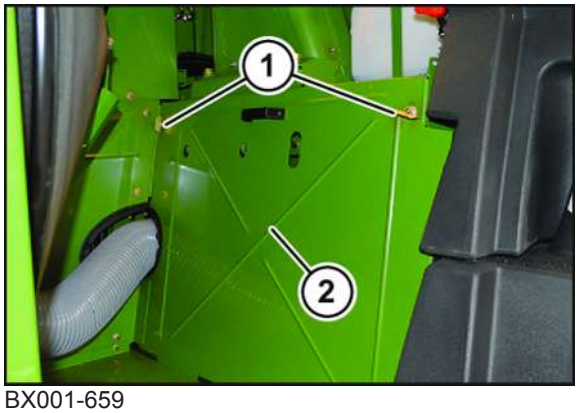

BX001-659

- Insert cover (2) and secure by means of lock bolts (1).

Removing additional axle with 2 persons

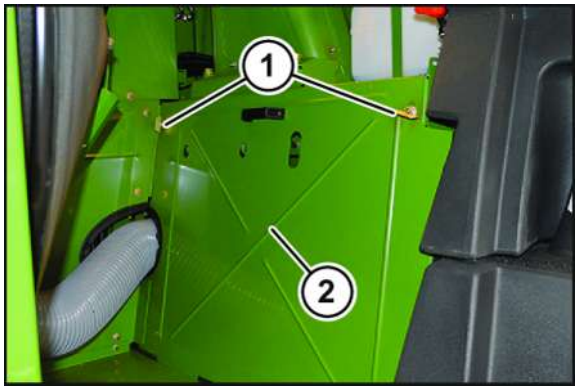

BX001-659

- ✓ The header is removed.
- ✓ The rear axle is in the top position.
- ✓ The machine is shut down and safeguarded,*refer to page 247*.
- ✓ The swivel device of corn conditioner is swivelled up.
- Loosen the lock bolt (1) by turning it and remove the cover (2).

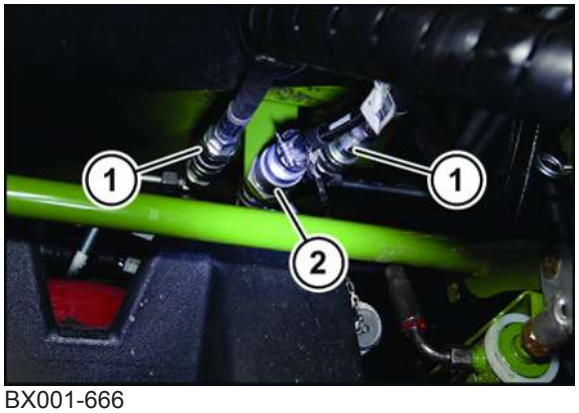

BX001-666

- Disconnect the hydraulic hoses (1).
- Disconnect the plug connection (2).

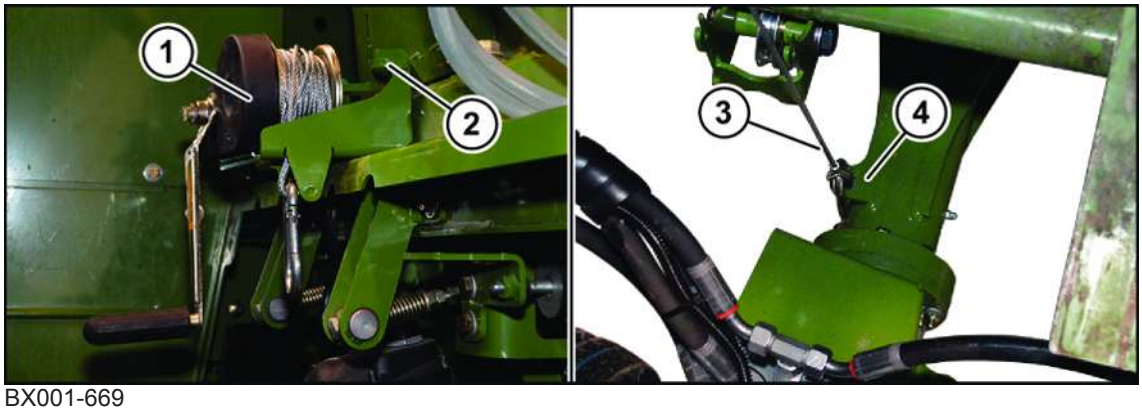

BX001-669

- Centre a pallet for supporting the additional axle under the additional axle.
- Hook the cable winch (1) into the holder (2).
- Hook the cable (3) into the rear towing ring (4) and pretension slightly.

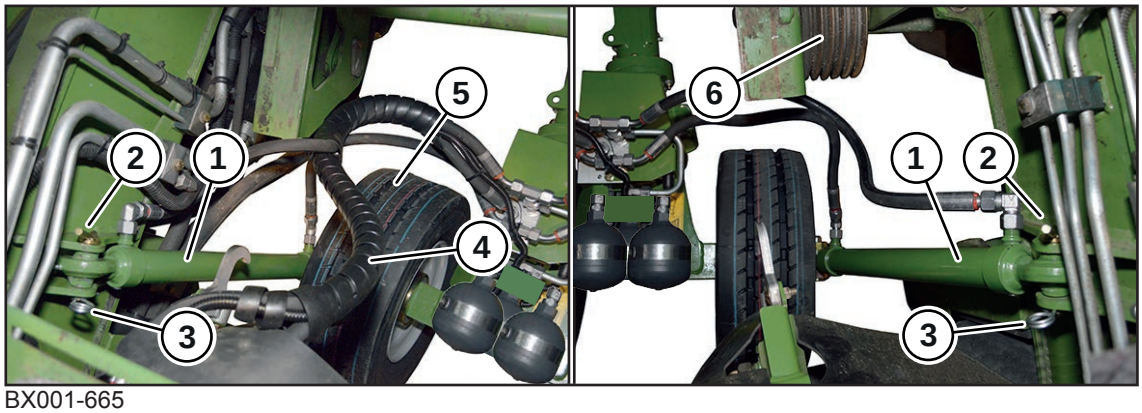

BX001-665

- Remove the spring cotter pins (3).
- Remove the bolts (2) and deposit the hydraulic cylinders (1) to the side.
- Completely lower the additional axle using the cable winch and detach the cable.

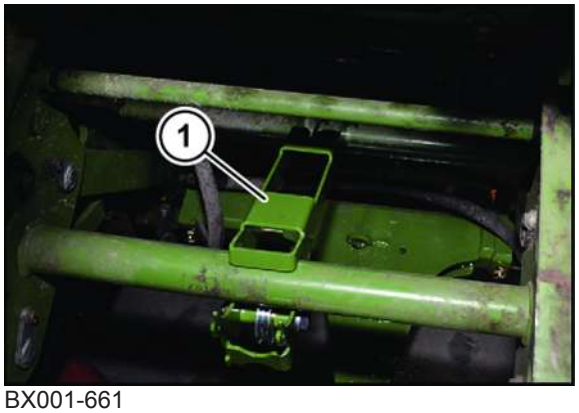

BX001-661

- Hook the deflection (1), centred above the additional axle, into the swivel device of the corn conditioner.

BX001-662

- Guide the cable (1) over the deflection rolls (2, 3). On the front deflection roll (2) the cable (1) is above the deflection roll and on the rear deflection roll (3) the cable (1) is below the deflection roll.
- Hook the cable (1) into the front towing ring (4) of the additional axle (5) and pretension the cable (1) slightly.

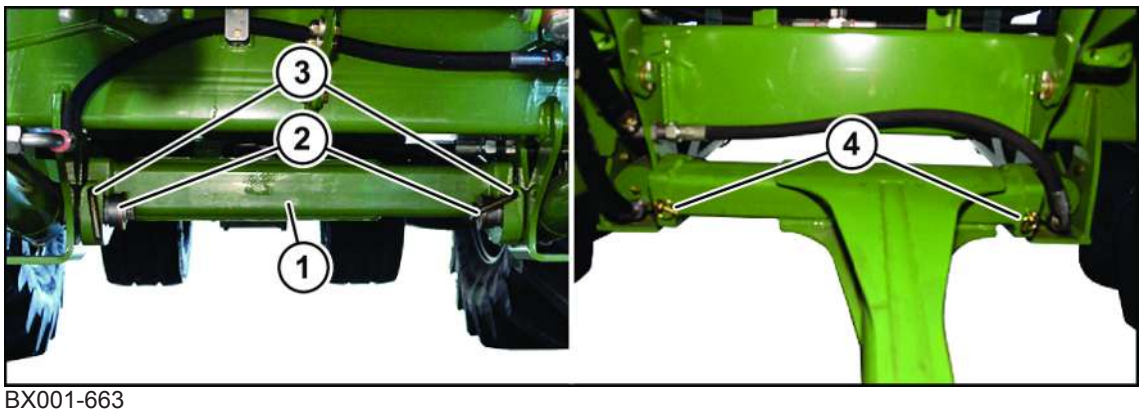

BX001-663

- Remove the linch pins (4).
- Remove the bolts (3) and completely lower the additional axle using the cable winch.
- Detach and wind up the cable.
- Detach the deflection.

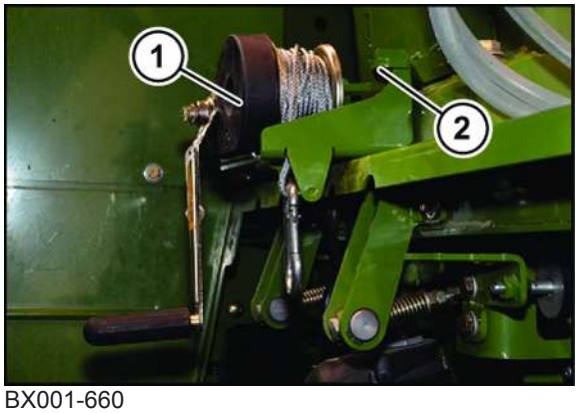

BX001-660

- Detach the cable winch (1). The holder (2) can remain in the machine.

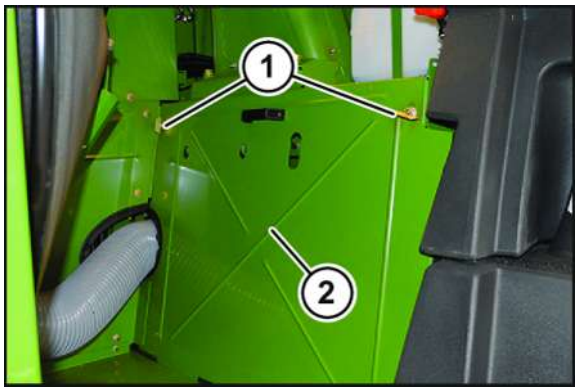

BX001-659

- Insert cover (2) and secure by means of lock bolts (1).

13 Start-up - maize mode

⚠ WARNING

Risk of injury due to non-observance of relevant safety notices

If the relevant safety notices are not observed, persons may get seriously injured or killed.

▶ To avoid accidents, the basic safety instructions must be read and observed, *refer to page 19*.

⚠ WARNING

Risk of injury due to non-observance of safety instructions

If the relevant safety routines are not observed, persons may be seriously injured or killed.

▶ The safety routines must be read and observed to avoid accidents, *refer to page 34*.

This chapter describes the conversion from grass mode to maize mode.

Maize mode only

Prerequisites for maize mode:

✓ The power cable and the lubrication line have been attached, *refer to page 260*.
✓ The clamping bar has been removed, *refer to page 256*.
✓ The grass channel has been removed, *refer to page 256*.
✓ The corn conditioner has been installed, *refer to page 257*.
✓ The kraftband has been attached, *refer to page 261*.
✓ The ventilation slot has been set, *refer to page 261*.
✓ The hydraulic system has been set to maize mode, *refer to page 241*.
✓ The grain capture sheet has been installed, *refer to page 262*.
✓ The conveyor bars of the pre-compression roller have been mounted so that the serrated side is used, *refer to page 509*.
✓ The chopping blades for maize mode have been mounted, *refer to page 493*.
✓ The counterblade for maize mode has been mounted, *refer to page 506*.
✓ The EasyCollect header, *refer to page 321* or the XCollect header, *refer to page 313* has been mounted.
✓ The season setting in the terminal has been adjusted to maize mode, *refer to page 209*.
✓ The lifting unit has been calibrated, *refer to page 187*.
✓ The spout extension has been mounted, *refer to page 262*.
✓ The camera of the auto-loading system has been mounted in the "Maize mode" position, *refer to page 267*.
✓ The rear weight has been mounted, *refer to page 269*.
✓ The additional axle has been mounted, *refer to page 272*.

Access to the corn conditioner/grass channel

The corn conditioner or the grass channel is accessed from the right side of the machine, behind the side hood on the right.

Prerequisites for installation and removal

- The side hood on the right is open.
- The rear axle has been completely raised using the keypad.
- The machine is shut down and secured, *refer to page 34*.

Dismounting the crop flow cover

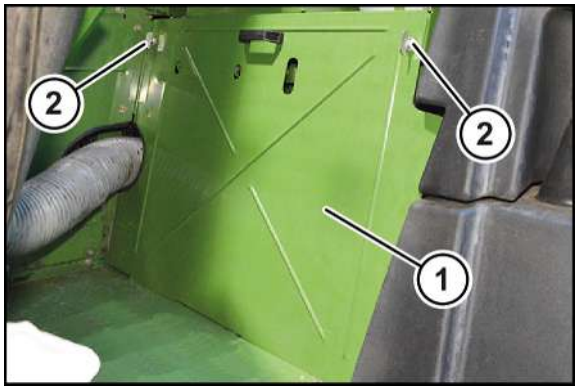

BXG000-108

- To remove the cover (1), unlock the quarter turn fasteners (2).

Set down the cover (1) outside the machine.

13.1 Removing the grass channel

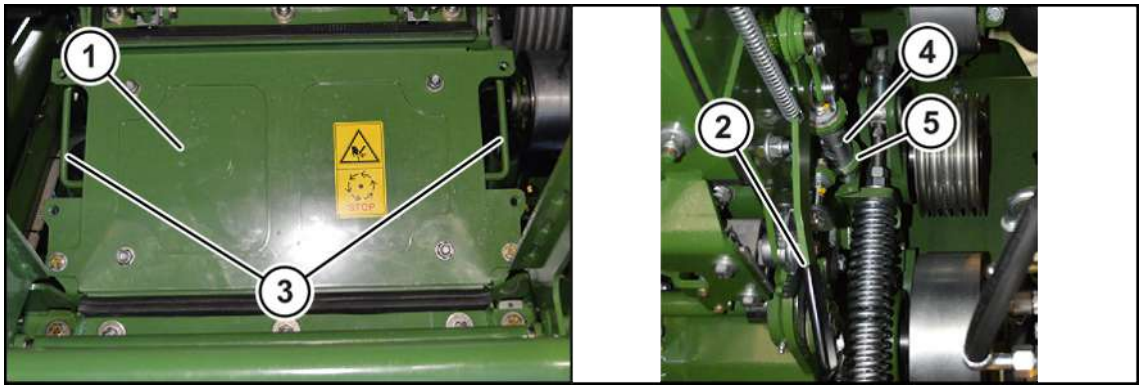

BX001-511

- To unlock the grass channel (1), swivel the lever (2) upwards, right and left.
- Pull out the grass channel by the handles (3).
- Put the grass channel (1) to one side.

13.2 Removing terminal strip

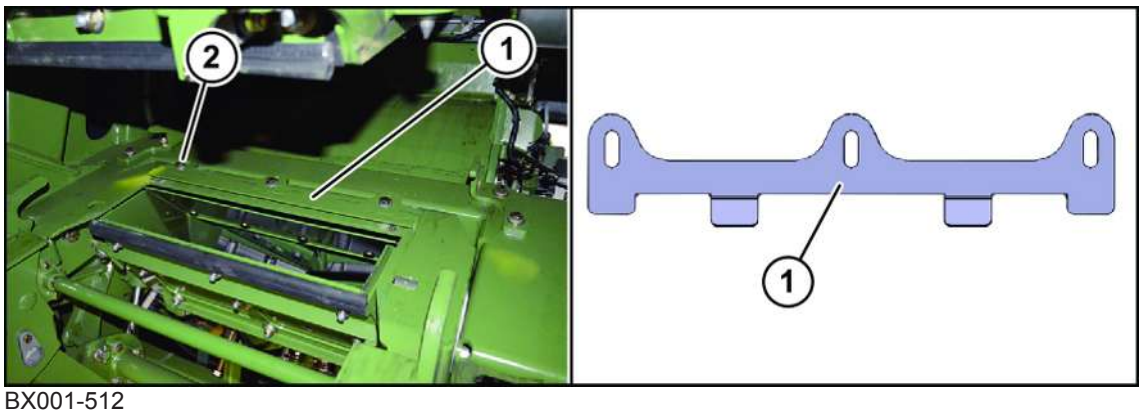

BX001-512

- Remove the terminal strip (1).

Store the terminal strip in a safe place for subsequent re-installation.

13.3 Installing corn conditioner

Overview

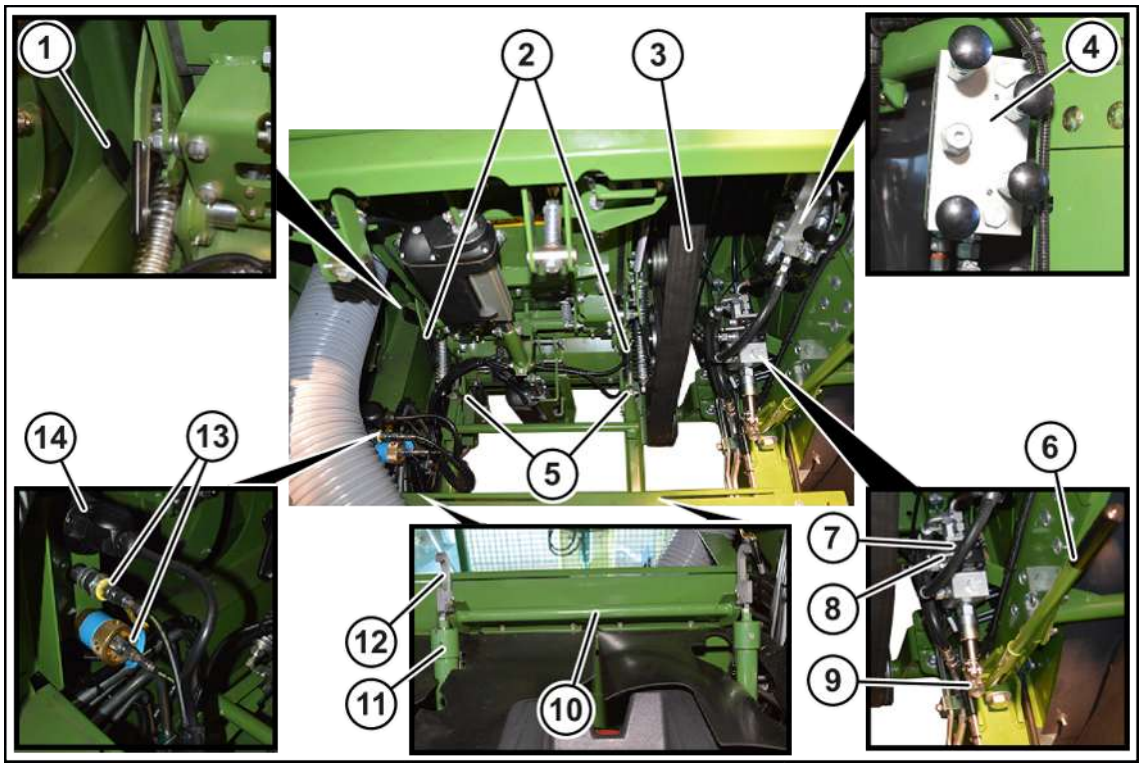

BX001-502

1	Locking lever swivel device	9	Holder for lever
2	Locking lever corn conditioner/grass channel	10	Cylinder retainer
3	Kraftband	11	Cylinder
4	Hydraulic block corn conditioner	12	Catch hook
5	Holder for catch hook	13	Lubrication line
6	Lever for hand pump	14	Power supply cable
7	Hand pump		
8	Switching valve on hand pump		

Functions on the control block of the corn conditioner

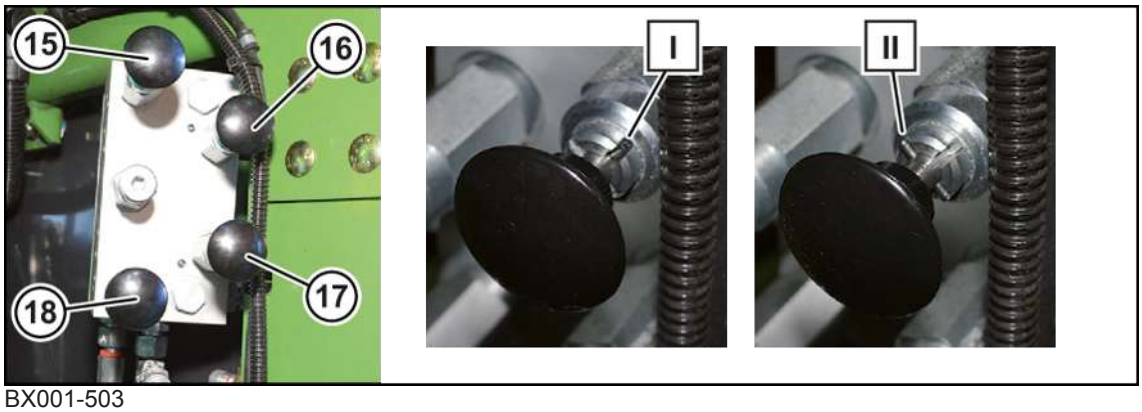

BX001-503

15	Retract cylinder	17	Raise swivel device
16	Extend cylinder	18	Lower swivel device

I = The valve is locked. The roll pin is in the deep groove.

I = The valve is released. The roll pin is in the flat groove.

Swivelling down the swivel device

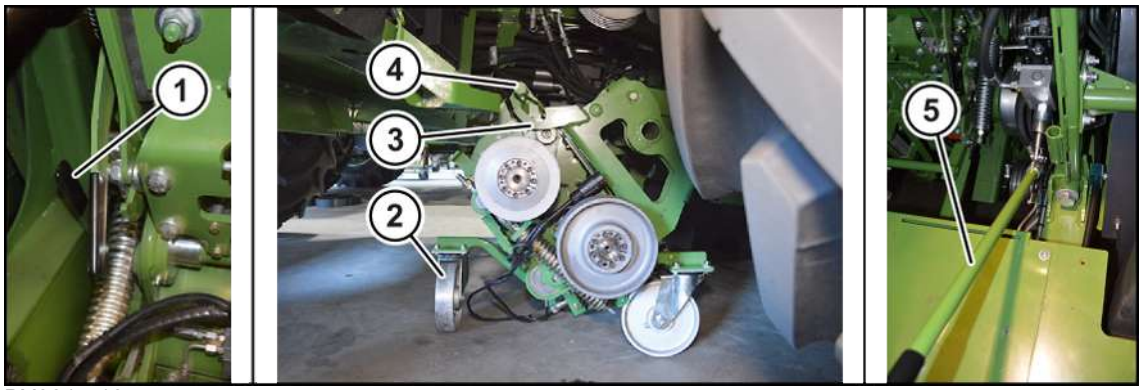

BX001-510

- Loosen the valve (18), lock the valves (16, 17, 19),*refer to page 300*.
- Place the hand pump (5) lever in the holding fixture of the hand pump.
- To unlock the swivel device, push the locking lever (1) forwards and simultaneously pump the lever for hand pump (5) several times.
- Lower the swivel device completely by pumping the lever for the hand pump (5).
- Push the corn conditioner from the right side and centre it under the machine.
- Until the holding fixtures (4) are located above the catch hooks (3), push the corn conditioner until it is centred in the swivel device.

Swivelling the corn conditioner upwards

- Loosen the valve (19), lock the valves (16, 17, 18),*refer to page 300*.
- Raise the corn conditioner until the distance between the corn conditioner and the ground is approx. 30 cm.
- Lock the valve (19).
- Remove the support rolls and place in the tool box.
- Loosen the valve (19).
- Swivel up the swivel device until the swivel device engages.

The swivel device is engaged when the pumping movement becomes noticeably more difficult.

Swivelling in the swivel device

- Loosen the valve (19), lock the valves (16, 17, 18),*refer to page 300*.
- Swivel up the swivel device by making pumping movements until the swivel device engages.

The swivel device is engaged when the pumping movement becomes noticeably more difficult.

Checking that the swivel device is locked

- ▶ Loosen the valve (18), lock the valves (16, 17, 19),*refer to page 300*.
- ▶ Pump the hand pump lever.
  - ⇨ If the swivel device does not lower, the swivel device is correctly locked.
  - ▶ Locking the valves (16, 17, 18, 19), *refer to page 257*.
  - ⇨ If the swivel device lowers, swivel in the swivel device again.

Hooking the catch hooks into the corn conditioner

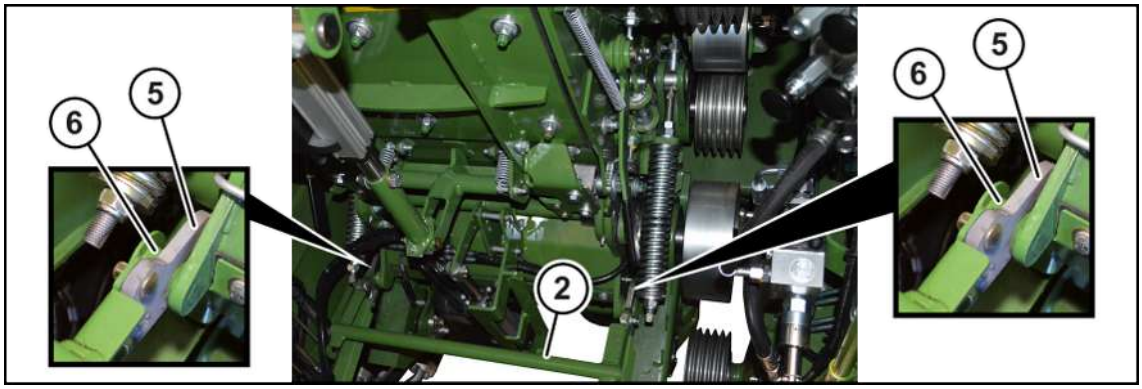

BX001-516

- Open the valve (17), lock the valves (16, 18, 19),*refer to page 300*.
- Raise the cylinder holder (2) and place the catch hooks (5) in the holders (6).

Moving the corn conditioner forwards

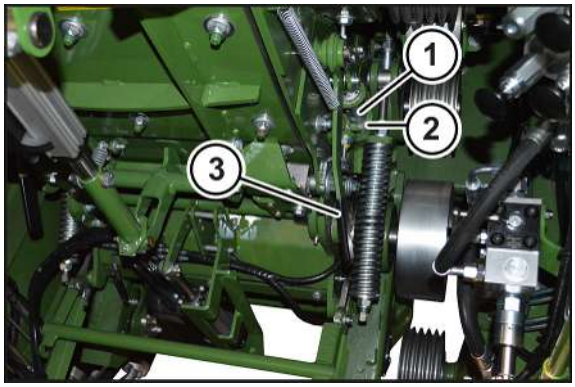

BX001-517

- ▶ Move the corn conditioner forwards by pumping the lever for hand pump until the bolt (1) can be inserted into the locking (2).
- ▶ To lock the corn conditioner, swivel the lever (3) downwards, on the right and left.

⚠ *WARNING*

Crushing hazard caused by sliding corn conditioner

If the corn conditioner is not secured by the catch hooks, it may start to slip when it becomes detached and injure people

- ▶ Leave the catch hooks on the holding fixtures of the corn conditioner during maize mode.

Checking retaining bolt of grass channel

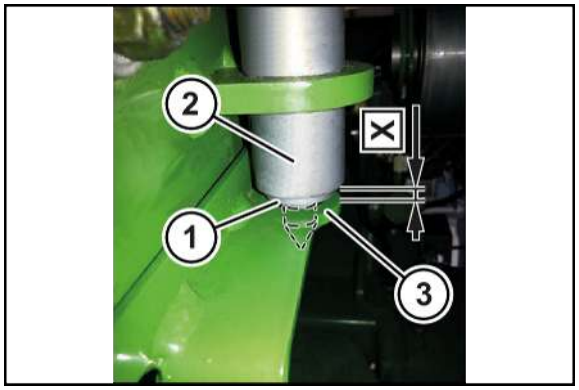

BX001-509

Checking retaining bolt of grass channel/corn conditioner:

- Make sure that the retaining bolt of grass channel/corn conditioner (1) rests on both sides on the grass channel or corn conditioner (3).
- Check dimension X.
  - ⇨ If the dimension is X=4-6 mm, the grass channel is properly attached.
  - ⇨ If the dimension is not X=4-6 mm, the retaining bolt must be adjusted, *refer to page 411*.

Mounting power supply cable and lubrication lines

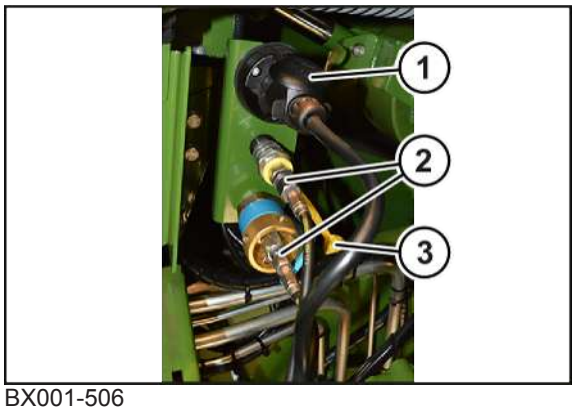

BX001-506

- Insert the power supply cable (1) into the socket.
- Screw on the lubrication lines (2).
- Close the covers (3).

Attaching kraftband

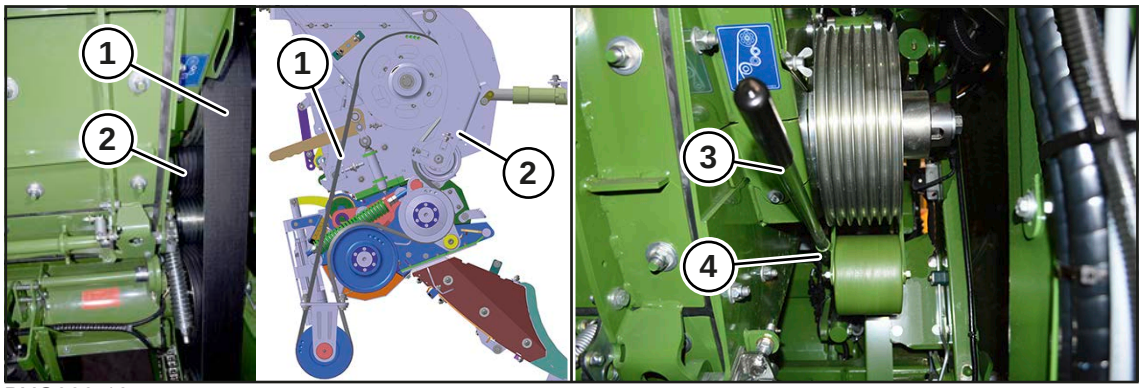

BXG000-107

- In order to be able to attach the kraftband (1), insert the manual lever (3) into the sleeve (4) on the tensioning arm (2) and press the tensioning arm (2) down towards the front.
- Attach the kraftband (2).
- Remove the manual lever (3).
- Pull the tensioning arm (2) upwards until the belt is slightly tensioned.

Calibrating corn conditioner

- Calibrate corn conditioner, *refer to page 189*

13.4 Adjusting ventilation slot

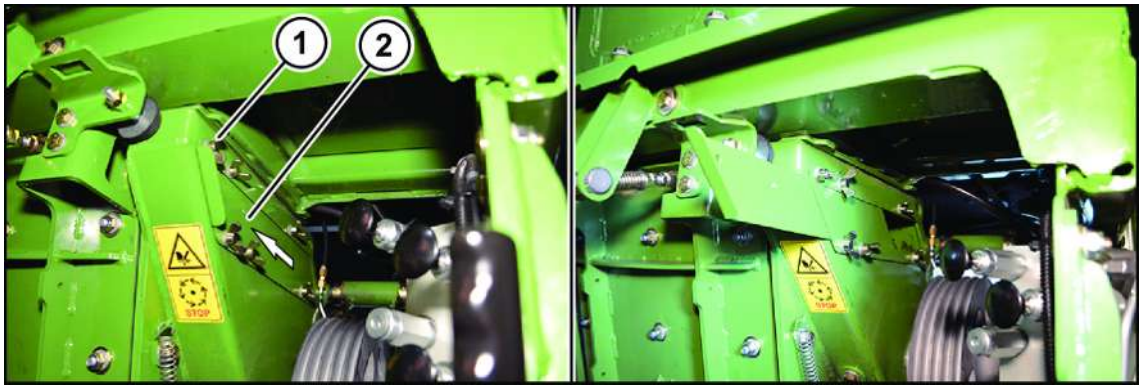

BXG000-091

To ensure an adequate discharge capacity during maize mode, the cover of the ventilation slot should be removed.

Removing

- Loosen the wing nuts (1).
- Pull out the cover sheet (2) backwards.
- Tighten the wing nuts (1).

Store the cover sheet in a safe place for subsequent reinstallation, e.g. In the tool box.

Mounting the crop flow cover

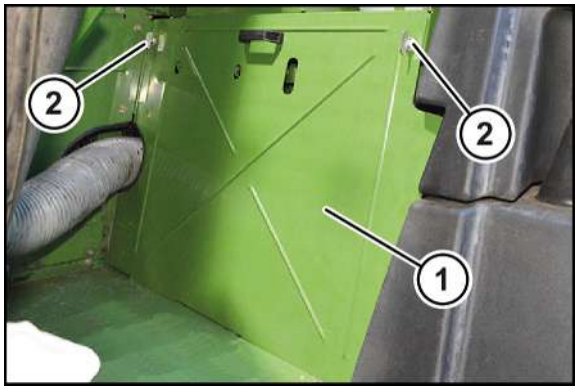

BXG000-108

- Attach the cover (1) and lock with the quarter turn fasteners (2).

13.5 Mounting grain capture sheet

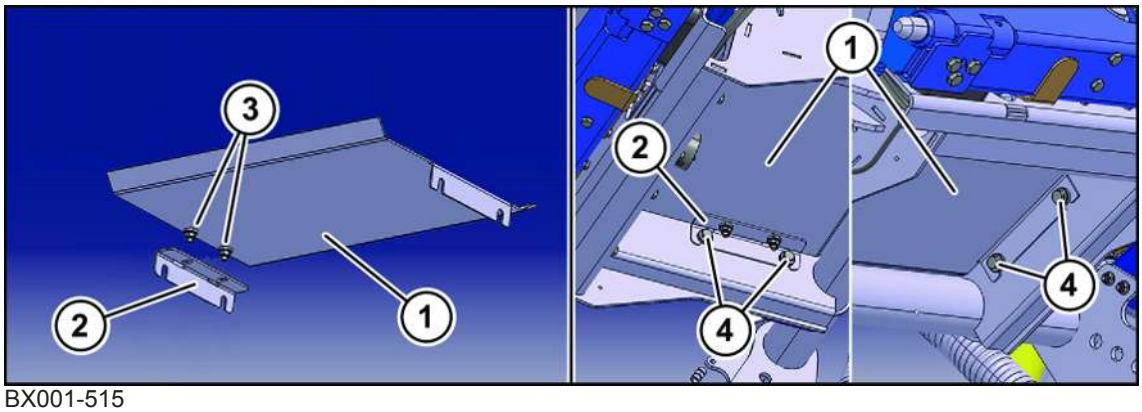

BX001-515

To install the grain capture sheet:

- Loosely attach the bracket (2) to the grain capture sheet (1) using coach screw (3), disc, detent edged washer and locknut.
- Insert the grain capture sheet (1) in such a way that the front folded edge of the grain capture sheet is above the trough at the front.
- Attach the grain capture sheet to the intake unit using hexagon head screws, detent edged washers and discs (4).
- Tighten the screw connection for bracket (2) and grain capture sheet (1).

13.6 Mounting spout extension

⚠ *WARNING*

Risk of injury due to non-observance of relevant safety notices

If the relevant safety notices are not observed, persons may get seriously injured or killed.

- To avoid accidents, the basic safety instructions must be read and observed, *refer to page 19*.

⚠ WARNING

Risk of injury due to non-observance of safety instructions

If the relevant safety routines are not observed, persons may be seriously injured or killed.

- ▶ The safety routines must be read and observed to avoid accidents, *refer to page 34*.

⚠ WARNING

Risk of injury from suspended load

There is a danger for persons due to falling load.

- ▶ Pay attention to sufficient carrying load of the hoist.
- ▶ Do not stay under the suspended load.
- ▶ If work has to be performed under the load, securely support the load.

When you convert from grass mode to maize mode or vice versa, the length of the spout must be adjusted to the header. The forage harvester is delivered from the factory with an "8 row spout end piece" and straight spout flap. All available spout extensions (10 - 14-row) are supplied with a pre-assembled conical spout flap. To optimise the crop flow, a straight spout flap is used for grass mode and a conical spout flap is used for maize mode. A conical spout flap is included in the scope of delivery of the EasyCollect 450-2, 600-2, 600-3 and the XCollect 600-3 for the eight-row spout extension.

NOTICE

The conical spout flap should not be used in grass mode. Due to the conical shape and the other flow properties of grass, in contrast to maize, there is an increased risk of a crop blockage in the spout.

The 12 and 14-row spout extensions can be hydraulically folded on account of their length.

For an overview of the tightening torques, *refer to page 424*.

Converting spout flap

When using the "8-row spout end piece", the following must be converted:

EasyFlow:

- Straight spout flap

EasyCollect, XCollect and XDisc:

- Conical spout flap

Removing spout flap

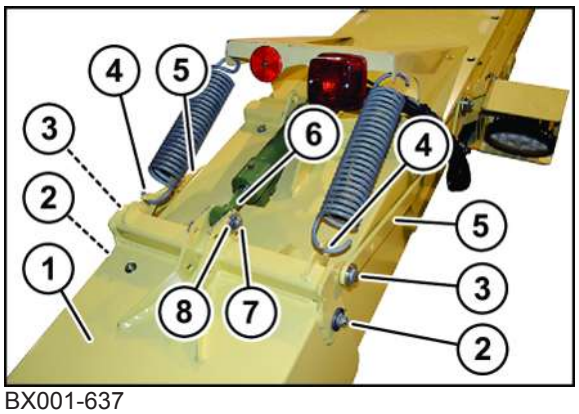

BX001-637

✓ The spout is located on the right side of the machine and has been fully lowered.

✓ The spout flap has been completely opened.

✓ The hydraulic circuits are depressurised.

✓ The machine has been shut down and secured, *refer to page 34*.

▶ Dismount the cotter pin (8) and the bolt (7) and take the hydraulic cylinder (6) out of the support/holder.

▶ Unscrew the screws (3) from the guidance (5).

▶ Detach the springs (4).

▶ Unscrew the screws (2) and remove the flap (1).

Attaching spout flap

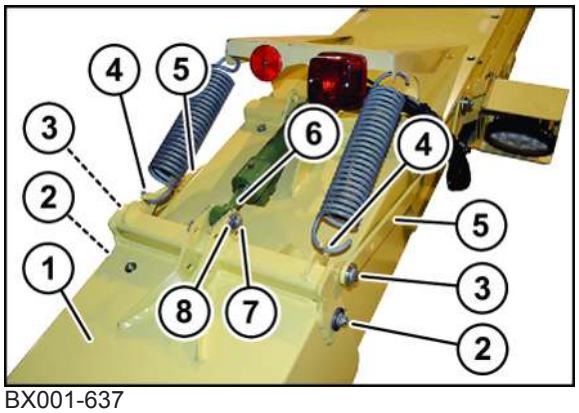

BX001-637

▶ Insert the flap (1) and mount the screws (2).

▶ Hook in the springs (4).

▶ Mount the guidance (5) with the screws (3).

▶ Insert the hydraulic cylinder (6) into the support/holder, mount the bolt (7) and the cotter pin (8).

Attaching 8 / 10-row spout extension

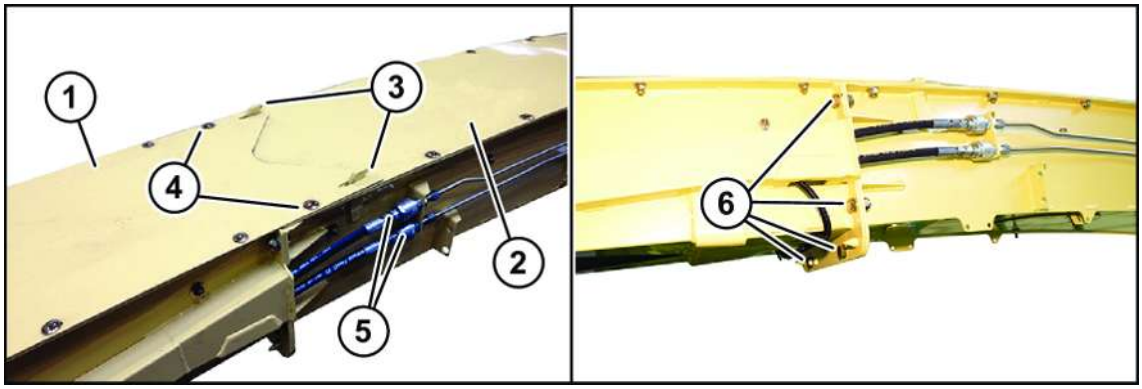

BX001-632

✓ The spout is located on the right side of the machine and is fully lowered.

✓ The spout flap has been completely opened.

✓ The hydraulic circuits are depressurised.

✓ The spout extension has been removed, *refer to page 242*.

✓ The machine is shut down and secured, *refer to page 34*.

▶ **NOTICE! The weight of the "8-row spout extension" is approx. 80 kg. The weight of the "10-row spout extension" is approx. 112 kg.** Pick up the pre-assembled spout extension (1) using a suitable load handling attachment.

▶ Hook the spout extension (1) into the supports (3) of the "spout basic" (2) and attach the screws (4, 6).

▶ Connect the hydraulic hoses (5) to the hydraulic lines.

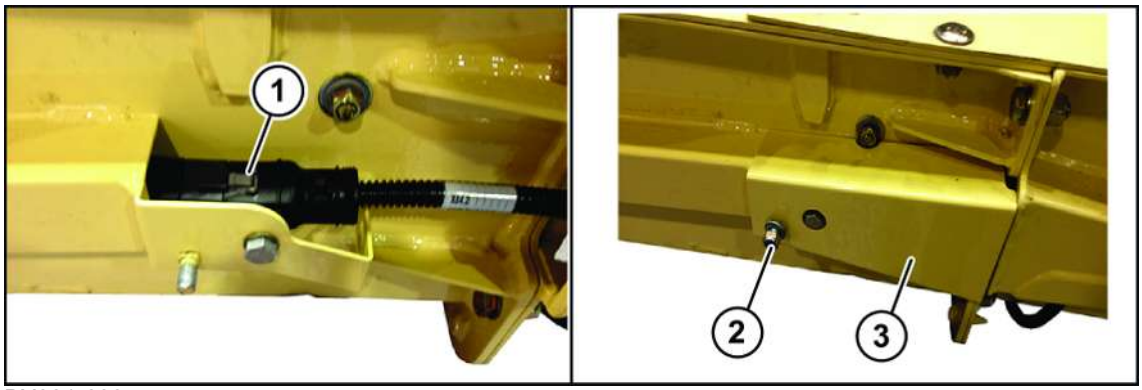

BX001-633

▶ Attach the plug connection (1).

▶ Attach the cover (3) and screw on the nut (2).

▶ Adjust the start-up safety mechanism of the spout, *refer to page 267*.

▶ Make a setting on the terminal to ensure that a spout extension has been attached, *refer to page 198*.

Attaching 12 / 14-row spout extension

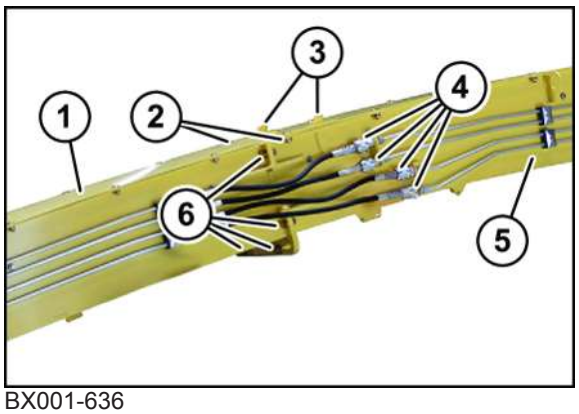

BX001-636

✓ The spout is located on the right side of the machine and is fully lowered.

✓ The spout flap has been completely opened.

✓ The hydraulic circuits are depressurised.

✓ The spout extension has been removed, *refer to page 242*.

✓ The machine is shut down and secured, *refer to page 34*.

▶ **NOTICE! The weight of the "12-row spout extension" is approx. 165 kg. The weight of the "14-row spout extension" is approx. 180 kg.** Pick up the pre-assembled spout extension (1) using a suitable load handling attachment.

▶ Hook the spout extension (1) into the supports (3) of the "spout basic" (5) and attach the screws (2, 6).

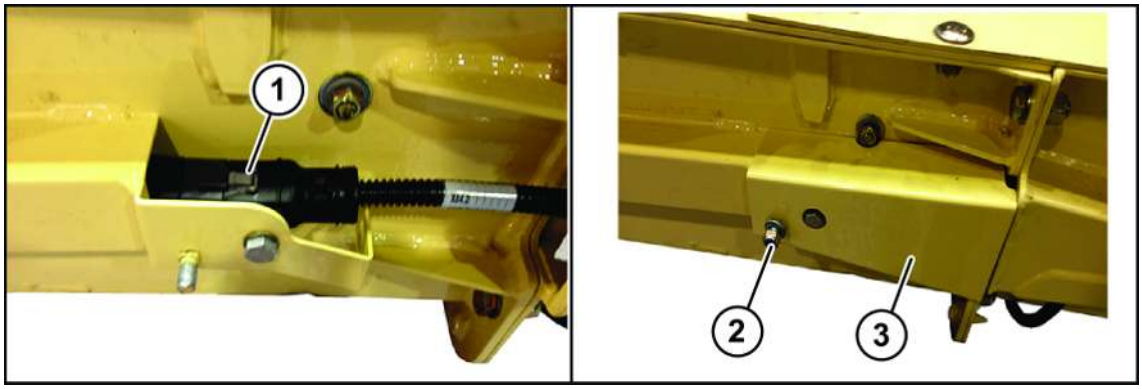

BX001-633

- Attach the plug connection (1).
- Attach the cover (3) and screw on the nut (2).

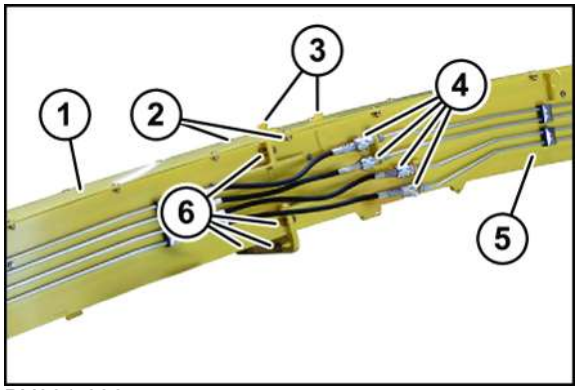

BX001-636

- Connect the hydraulic hoses (4) to the hydraulic lines.
- Set the folding-in/folding-out speed, *refer to page 266*.
- Adjust the start-up safety mechanism of the spout, *refer to page 267*.
- Make a setting on the terminal to ensure that a spout extension has been attached, *refer to page 198*.

Setting the folding-in/folding-out speed of the 12 /14-row spout extension

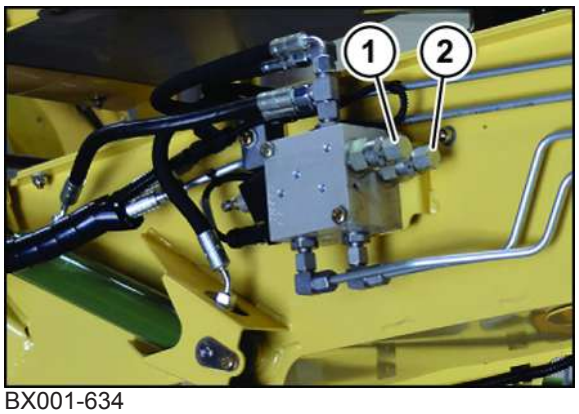

BX001-634

- To set the folding-out speed, turn the setting screw (1) on the throttle check valve.
- To set the folding-in speed, turn the setting screw (2) on the throttle check valve.

Setting the start-up safety mechanism of spout

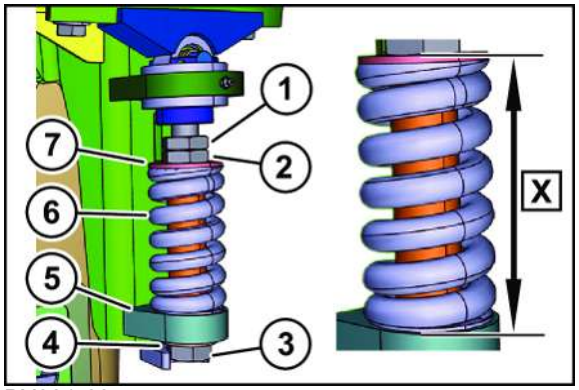

BX001-635

The start-up safety mechanism must be set via compression spring (6), matching the mounted spout extension. This prevents that the forces on the spout become too great if the start-up safety mechanism triggers.

The following table lists the setting values for the prestressing dimension X of the compression spring (6) depending on spout extension:

Spout extension	Prestressing dimension X
8 rows extension	124 mm
10 rows extension	122 mm
12 rows extension	120 mm
14 rows extension	118 mm

Setting the prestressing dimension of the compression spring (6):

- ▶ Loosen the counter nut (1).
- ▶ Turn the nut (2) until the required prestressing dimension X is set. Measure the prestressing dimension X from upper side of the pressure sleeve (7) to holding sheet of the spring hanger (5).
- ▶ Tighten the counter nut (1).
- ▶ Check axial play of disc (4).
  - ⇨ The disc (4) does not have any axial play and cannot be turned.
  - ▶ Set the axial play of the disc via the hexagon head screw (3) to 0-1 mm.

13.7 Mounting camera into maize mode position (for "auto-loading system" version)

NOTICE
If there are no hole pattern or screw points for mounting the camera onto the spout, see instructions for accessories kit B386 "Auto-loading system" (150 001 104_01).

Spout end piece 8/10 rows

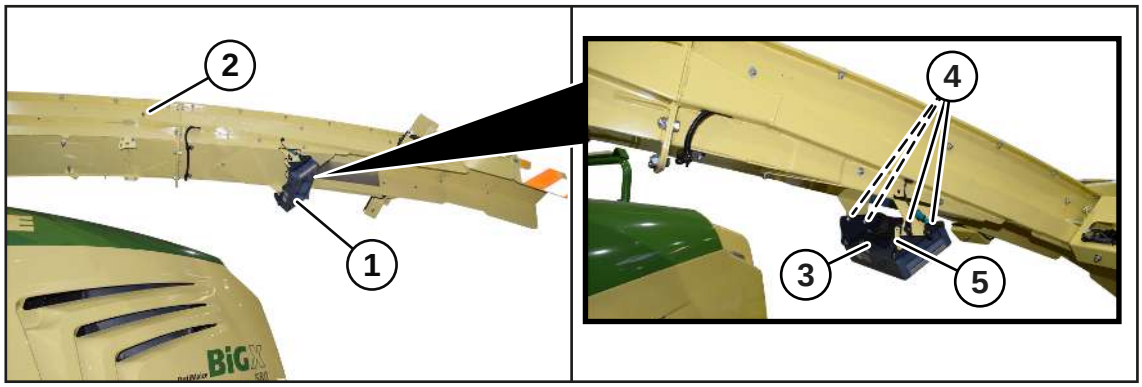

BX002-061

- If the camera is mounted in grass mode position, dismount the camera, *refer to page 269*.
- Mount the camera (1) in the illustrated position using the screws (4).
- Set the camera (1) to 0° using the inclination scale (5).
- Connect the camera cable (3), lay it in the cable duct (2) and secure it with cable ties.
- Calibrate the spout, *refer to page 198*.

Spout end piece 12/14 rows

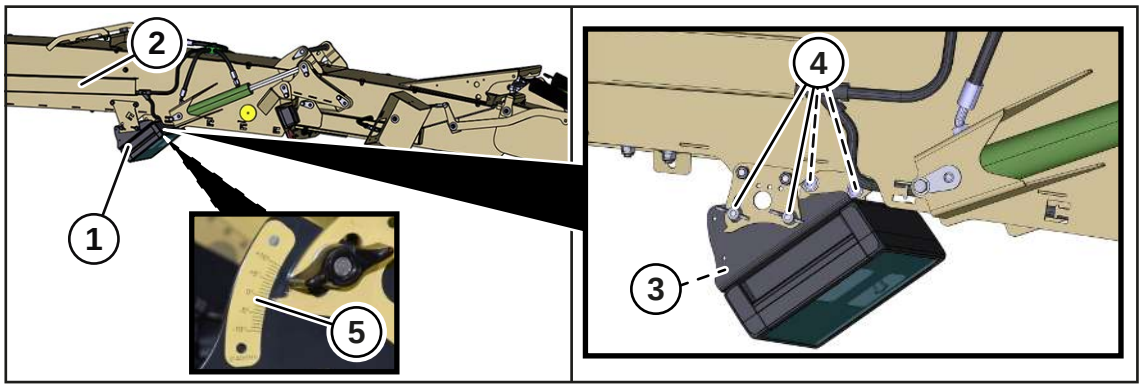

BX002-062

- If the camera is mounted in grass mode position, dismount the camera, *refer to page 269*.
- Mount the camera (1) in the illustrated position using the screws (4).
- Set the camera (1) to 0° using the inclination scale (5).
- Connect the camera cable (3), lay it in the cable duct (2) and secure it with cable ties.
- Calibrate the spout, *refer to page 198*.

13.8 Dismounting camera when in grass mode position (for "auto-loading system" version)

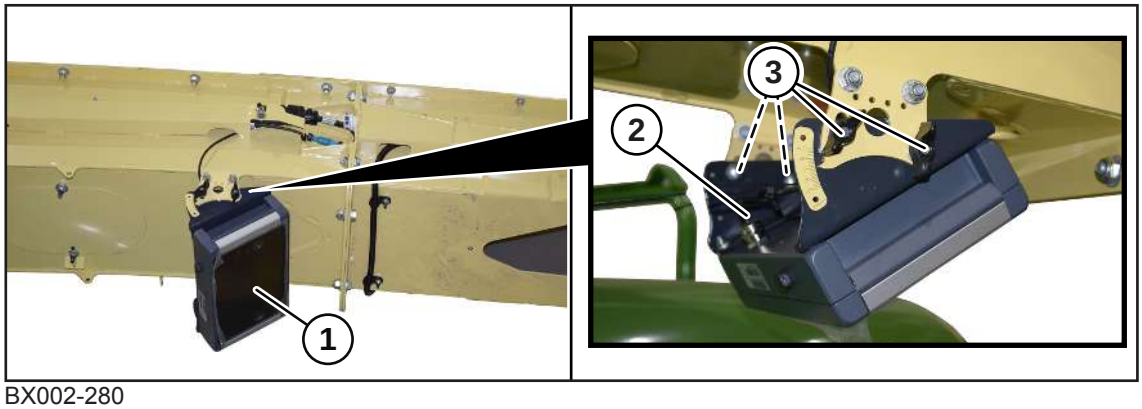

BX002-280

- Disconnect the camera cable (2) from the camera (1).
- Unscrew the screws (3) and remove the camera (1).

13.9 Attaching rear weight

INFORMATION

After the rear weight has been attached, the roller guides for supporting the header can no longer be lowered as deeply as prior to when the rear weight was attached.

For example, it is possible that the header that was not previously detached can no longer be attached.

- Prior to removing the header, set the support jacks on the header to be somewhat longer than usual.

WARNING

Risk of injury from suspended load

There is a danger for persons due to falling load.

- Pay attention to sufficient carrying load of the hoist.
- Do not stay under the suspended load.
- If work has to be performed under the load, securely support the load.

WARNING

Risk of injury due to unexpected movements when the machine is operating

If the rear weight and the front-mounted EasyCollect or XCollect header are not coordinated with each other, there is a risk that the machine may overturn when braking or when driving on slopes.

- Do not drive the machine on the road or use it for work unless the rear weight, stipulated for the combination of machine and fitted header, has been mounted.

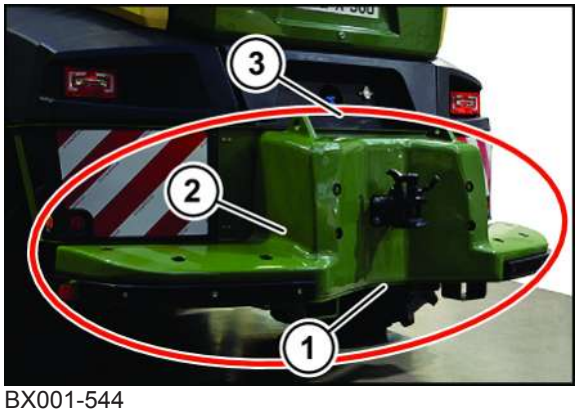

BX001-544

If a header is used, an additional rear weight must be applied to the machine behind the rear axle. The rear weight (3) consists of the basic weight (2), the end plate (1) and the intermediate plates. The number of required intermediate plates depends on machine type, permitted front axle load and header type, see operating instructions of the machine.

Dismounting tow coupling and rubber buffer

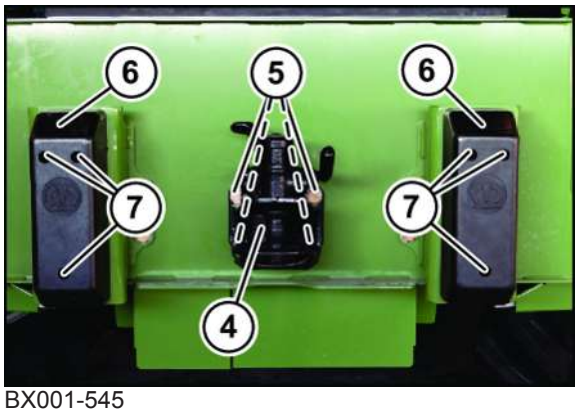

BX001-545

✓ The machine is shut down and safeguarded, *refer to page 34*.

▶ To remove the tow coupling (4), unscrew the 4 screws (5).

▶ To remove the both rubber buffers (6), dismount 3 screws (7) each.

Mounting rear weight

Screw fastening material for mounting, refer to parts list in the instructions for accessories kit “Rear Weight”.

For an overview of the tightening torques, *refer to page 424*.

✓ The rear weight is pre-assembled with the corresponding number of intermediate plates and the end plate, refer to instructions for accessories kit “rear weight”.

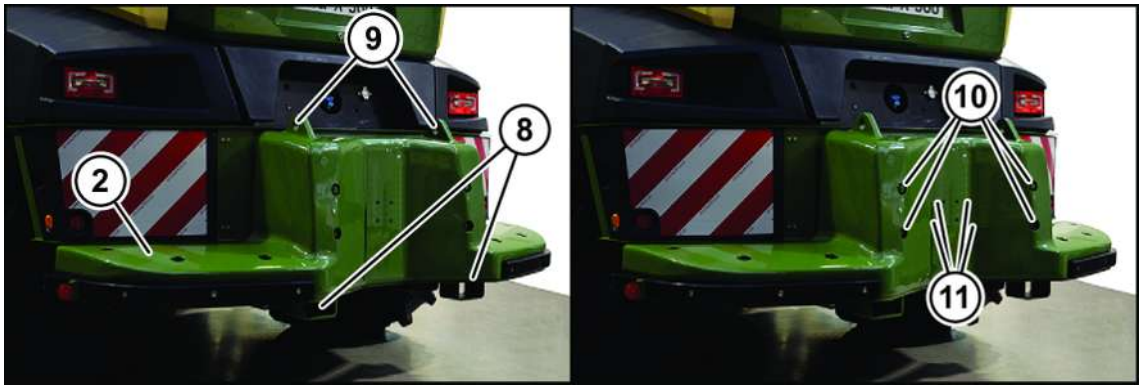

BX001-546

Depending on how the machine is equipped, the maximum rear weight is approximately 2,900 kg.

▶ Position the rear weight (3) using a suitable hoist on the bumper of the machine so that the screws (10) and the threaded rods (11) can be mounted.

To this end, use

- the openings (8) for a forklift
- the suspension points (9) for a lifting traverse

.

▶ Ensure that the hoist is mounted correctly on the stop points.

▶ Mount the basic weight (2) with the 4 screws (10) and the discs on the bumper.

▶ Mount the basic weight (2) with the 4 threaded rods (11) and the centring bushings on the bumper.

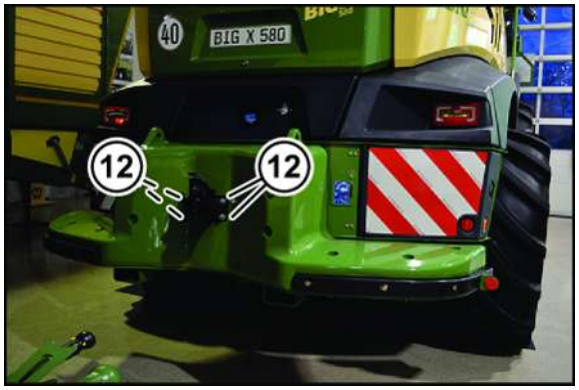

BX001-547

▶ Mount the tow coupling with the nuts (12) on the threaded rods (11).

▶ Check tyre pressure, *refer to page 463*.

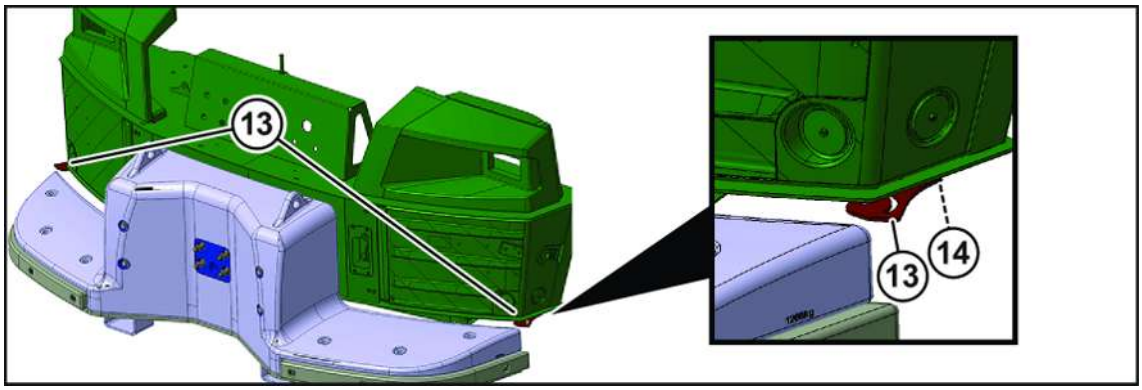

BX001-646

To prevent plants from getting between rear weight and bumper, mount the scrapers (13):

- ▶ Loosely fasten the scrapers (13) with the screws (14) on the bumper.
- ▶ Adjust the scrapers (13) via the oblong holes so that there is no gap and tighten the screws (14).

13.10 Mounting additional axle

⚠ WARNING

Risk of injury from suspended load

There is a danger for persons due to falling load.

- ▶ Pay attention to sufficient carrying load of the hoist.
- ▶ Do not stay under the suspended load.
- ▶ If work has to be performed under the load, securely support the load.

For an overview of the tightening torques, *refer to page 424*.

Mounting additional axle with one person

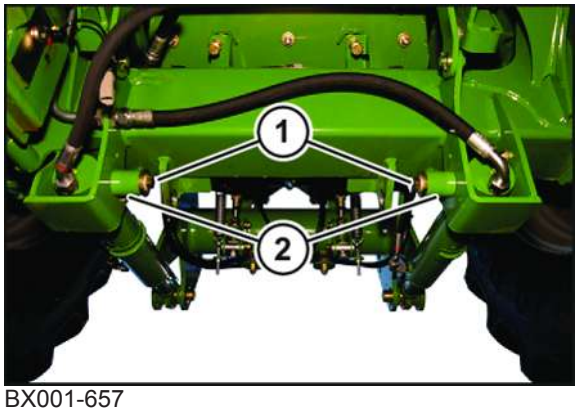

BX001-657

- ✓ The tyre pressure in the wheels of the additional axle has been set to 10 bar.
- ✓ The header has been completely lowered to the ground.
- ✓ The rear axle is in the top position.
- ✓ The machine has been shut down and secured, *refer to page 270*.
- ✓ The swivel device of the corn conditioner has been swivelled up.
- ▶ Unscrew the screw (1) from the locating bolt of the front axle and remove the spacer tubes (2).
- ▶ Mount the screw (1), note the installation position of the locking washer.

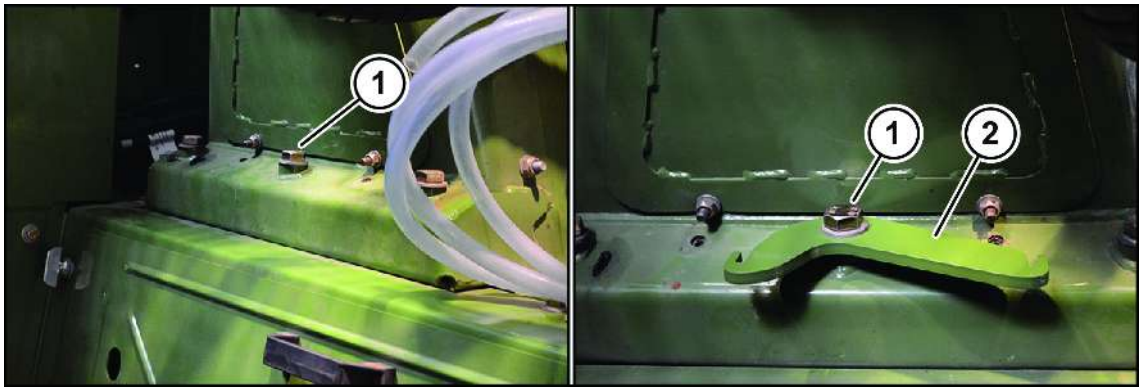

BX001-658

- Unscrew the screw (1) from the channel support.
- Mount the cable winch holding fixture (2) with the screw (1).

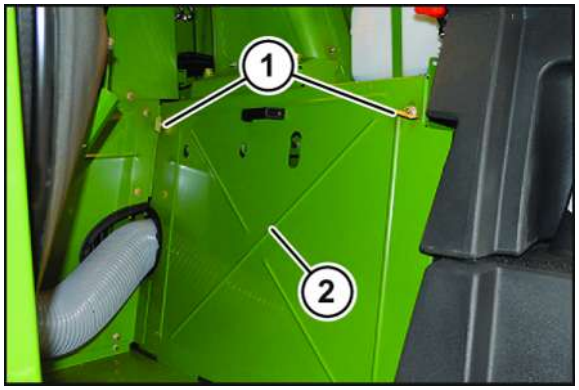

BX001-659

- Loosen the lock bolt (1) by turning it and remove the cover (2).

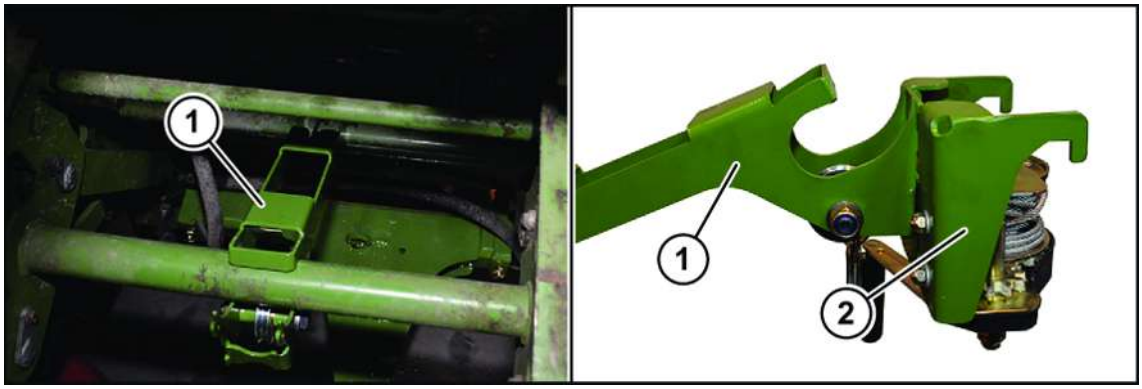

BX001-667

- Slide the additional axle by using a lifting cart under the machine until the retainer hooks of the additional axle are located under the locating bolt of the front axle.
- Hook the deflection (1) centred above the additional axle into the swivel device of corn conditioner.
- Hook the cable winch (2) into the deflection (1).

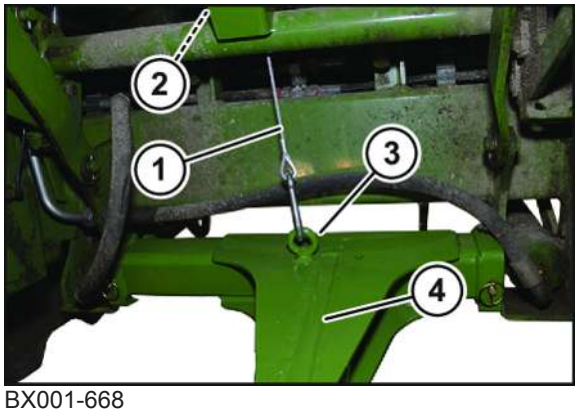

BX001-668

- Guide the cable (1) above the deflection roll (2).
- Hook the cable (1) into the front drawbar eye (3) of the additional axle (4) and slightly pre-tension the cable (1).

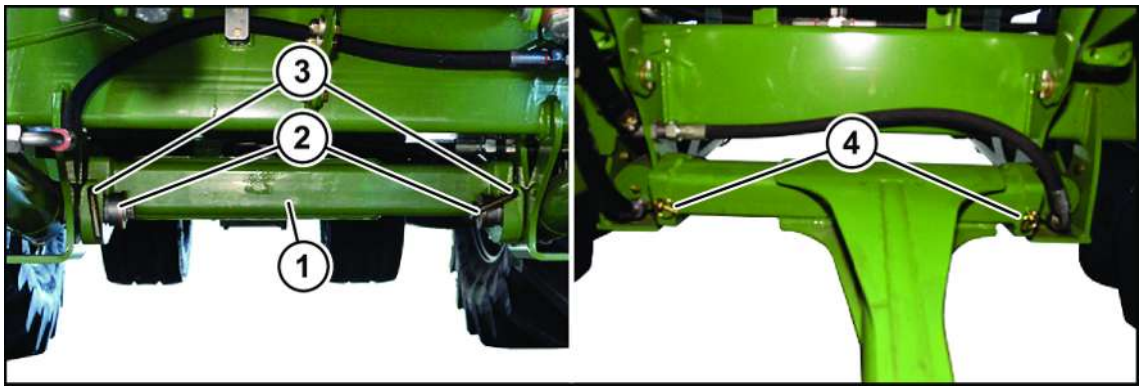

BX001-663

- Raise the additional axle (1) by using the cable winch and ensure that the retainer hooks of the additional axle gear into the locating bolts (2) of the front axle on both sides.
- Mount the bolt (3) and secure with linch pins (4).
- Release the cable and remove it completely out of the deflection.

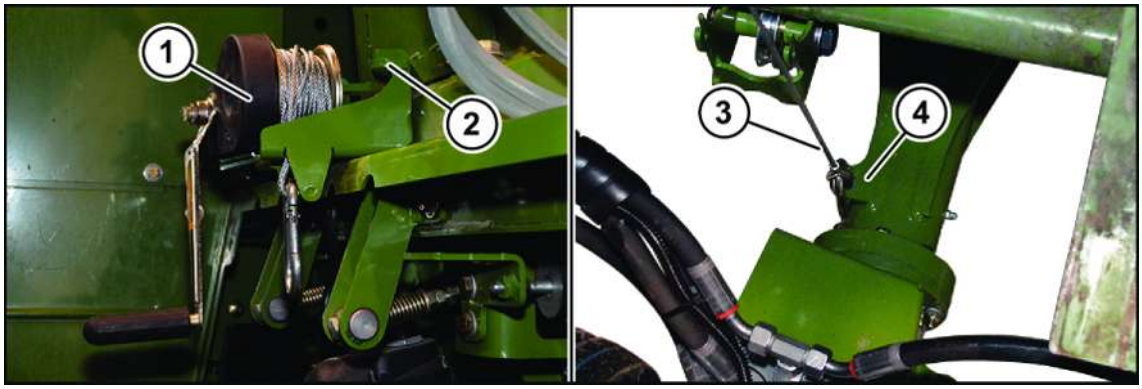

BX001-669

- Detach the cable winch (1) from the deflection and hook it into the holder (2)
- Hook the cable (3) into the rear drawbar eye (4) and pre-tension it slightly.

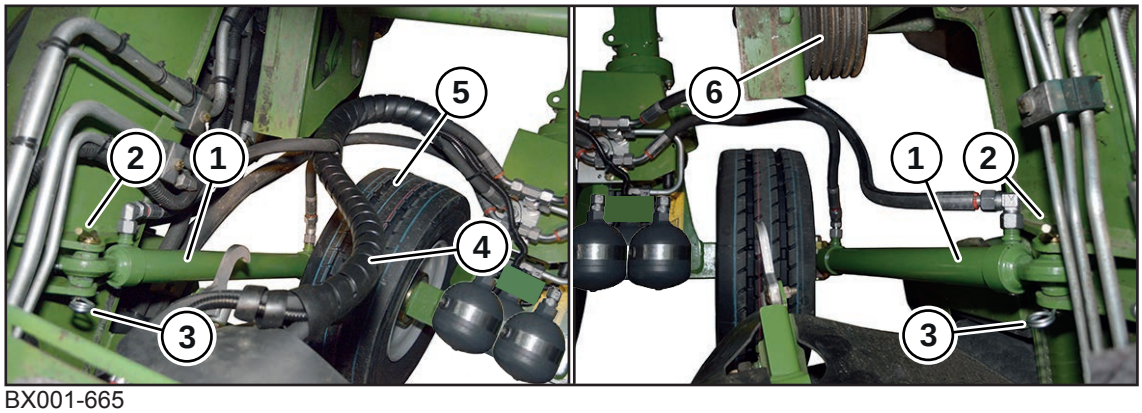

BX001-665

- Align the hydraulic cylinders (1) vertically and pull up the additional axle by using the cable winch.
- Mount the hydraulic cylinders (1) with bolts (2) and secure with spring cotter pins (3).
- Detach the cable and wind it.
- Lay the hydraulic hoses and the cable harness (4) so that they do not touch the corn conditioner drive (6) and the impeller (5) of additional axle.

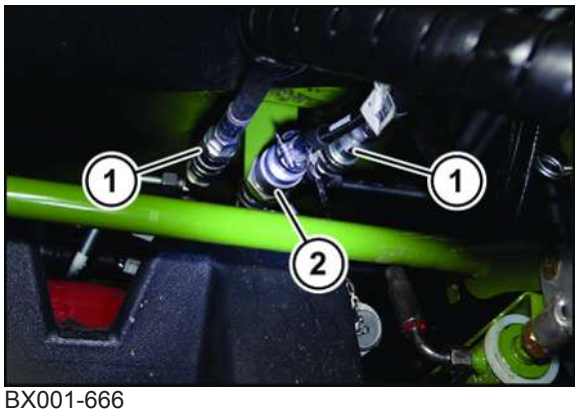

BX001-666

- Connect the hydraulic hoses (1).
- Establish the plug connection (2).
- Detach the deflection from swivel device.

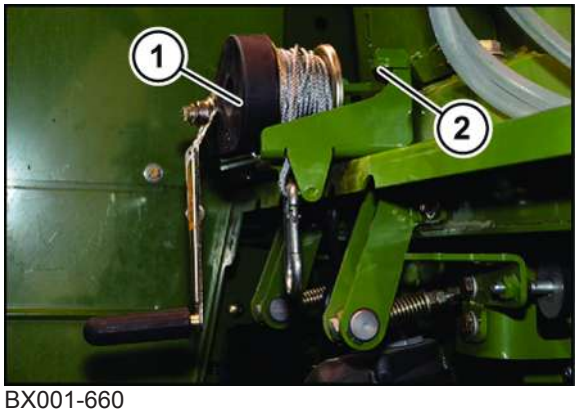

BX001-660

- Detach the cable winch (1). The holder (2) can remain in the machine.

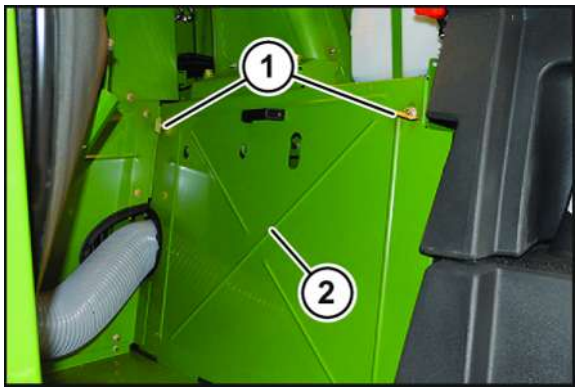

BX001-659

- Insert cover (2) and secure by means of lock bolts (1).

Mounting additional axle with two persons

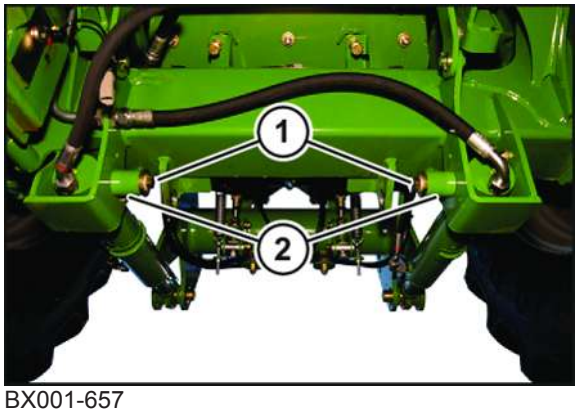

BX001-657

- ✓ The tyre pressure in the wheels of the additional axle has been set to 10 bar.
- ✓ The header has been completely lowered to the ground.
- ✓ The rear axle is in the top position.
- ✓ The machine has been shut down and secured, *refer to page 270*.
- ✓ The swivel device of the corn conditioner has been swivelled up.
- Unscrew the screw (1) from the locating bolt of the front axle and remove the spacer tubes (2).
- Mount the screw (1), note the installation position of the locking washer.

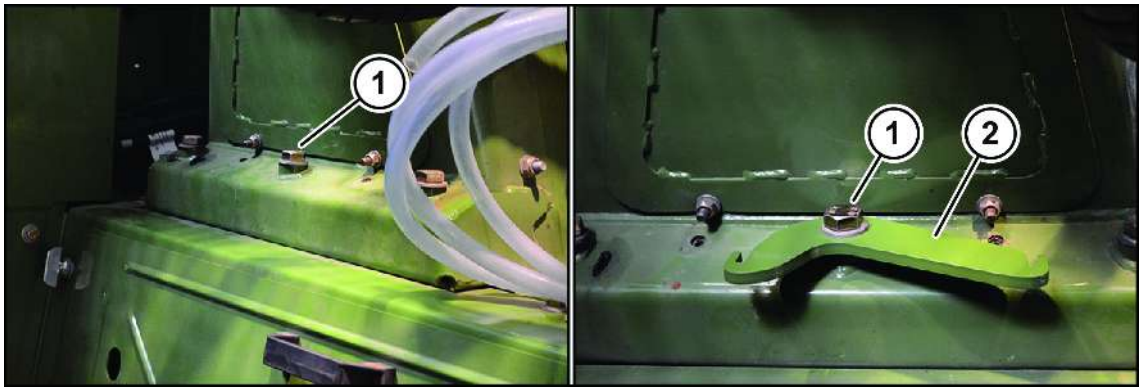

BX001-658

- Unscrew the screw (1) from the channel support.
- Mount the cable winch holding fixture (2) with the screw (1).

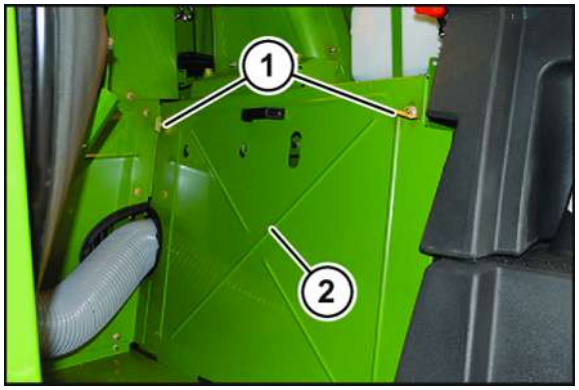

BX001-659

- Loosen the lock bolt (1) by turning it and remove the cover (2).

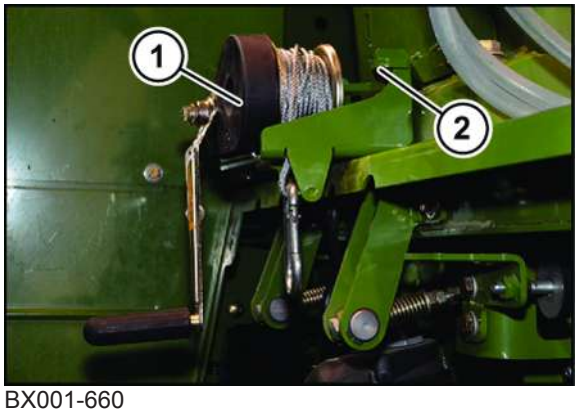

BX001-660

- Hook the cable winch (1) into the holder (2).

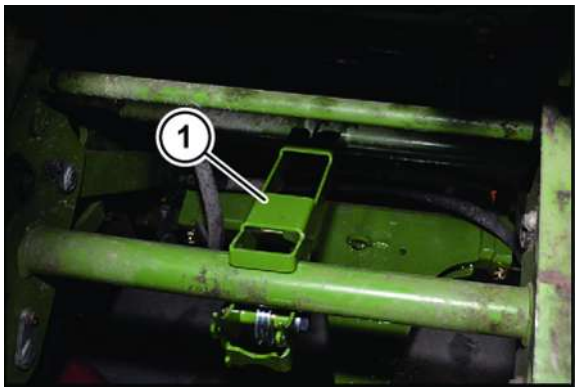

BX001-661

- Push the additional axle by means of lifting cart under the machine until the retainer hooks of the additional axle are under the locating bolts of the front axle.
- Hook the deflection (1) centred above the additional axle into the swivel device of corn conditioner.

BX001-662

- Guide the cable (1) over the deflection rolls (2, 3).
- Hook the cable (1) into the front drawbar eye (4) of the additional axle (5) and pre-tension the cable (1) slightly.

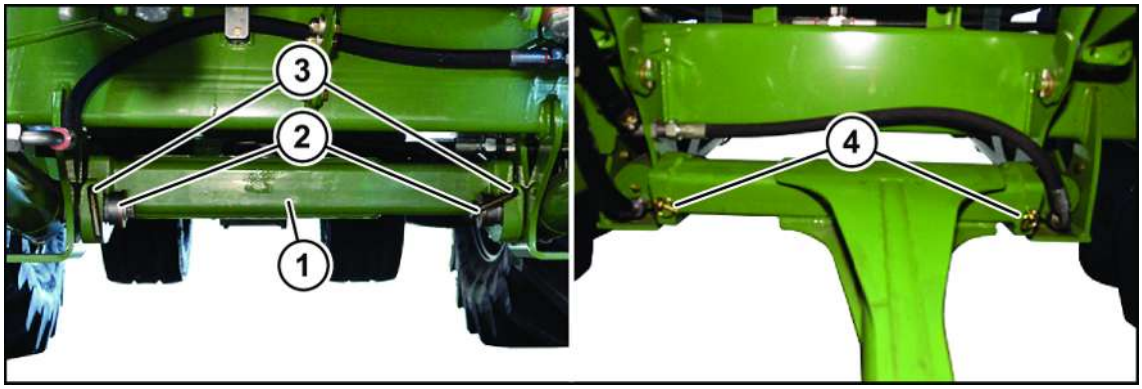

BX001-663

- Raise the additional axle (1) by using the cable winch and ensure that the retainer hooks of the additional axle gear into the locating bolts (2) of the front axle on both sides.
- Mount the bolt (3) and secure with linch pins (4).

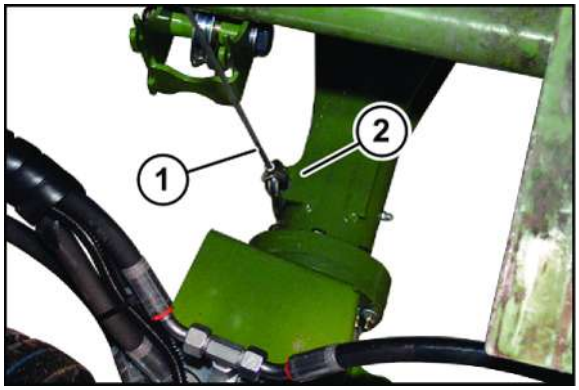

BX001-664

- Slacken the cable (1) and completely remove it from the deflection.
- Hook the cable (1) into the rear towing ring (2) and pretension slightly.

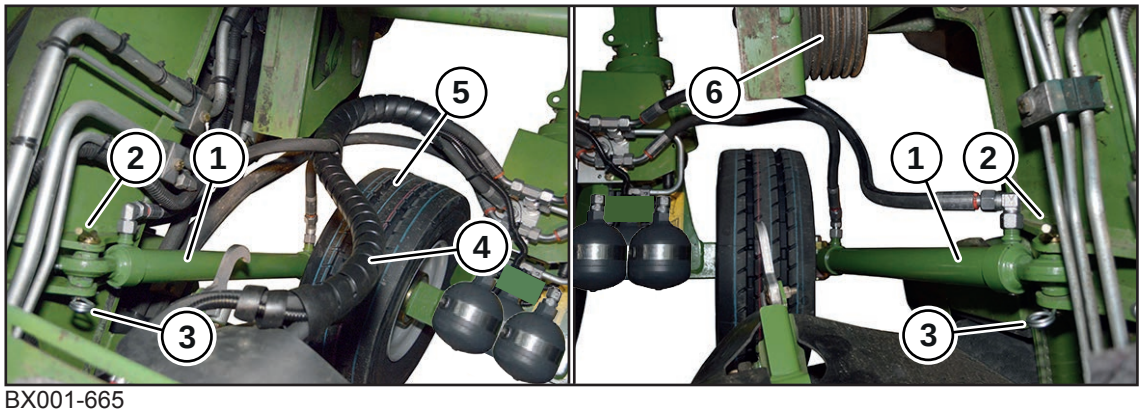

BX001-665

- Align the hydraulic cylinders (1) vertically and pull up the additional axle with the cable winch.
- Attach the hydraulic cylinders (1) with the bolts (2) and secure with the spring cotter pins (3).
- Detach and wind up the cable.
- Install the hydraulic hoses and the cable harness (4) in such a way that they do not touch the drive of the corn conditioner (6) and the fan wheel (5) of the additional axle.

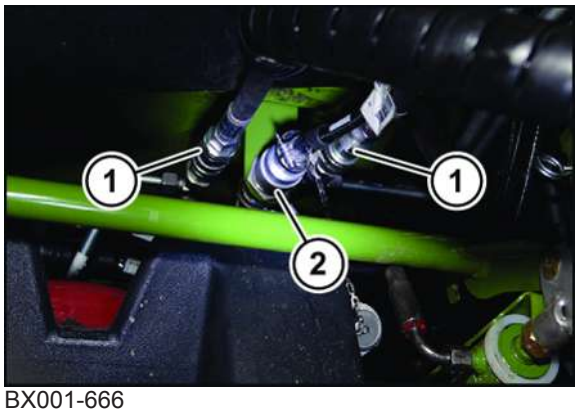

BX001-666

- Connect the hydraulic hoses (1).
- Establish the plug connection (2).
- Detach the deflection from swivel device.

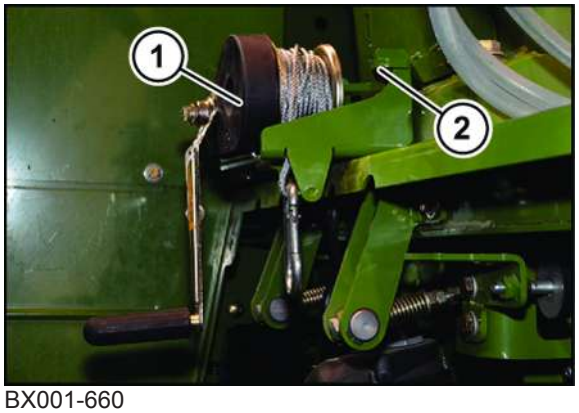

BX001-660

- Detach the cable winch (1). The holder (2) can remain in the machine.

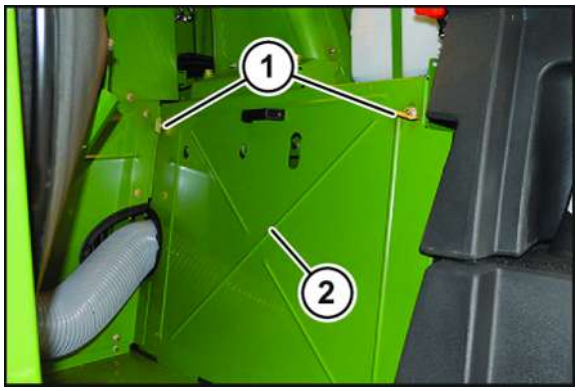

BX001-659

- Insert cover (2) and secure by means of lock bolts (1).

14 Start-up – Grass/maize mode for the transition period

⚠ WARNING

Risk of injury due to non-observance of relevant safety notices

If the relevant safety notices are not observed, persons may get seriously injured or killed.

- ▶ To avoid accidents, the basic safety instructions must be read and observed, *refer to page 19*.

⚠ WARNING

Risk of injury due to non-observance of safety instructions

If the relevant safety routines are not observed, persons may be seriously injured or killed.

- ▶ The safety routines must be read and observed to avoid accidents, *refer to page 34*.

INFORMATION

The grass channel cannot be connected to a corn conditioner with discs (for "corn conditioner with discs" version). It is therefore not possible to use the installed corn conditioner with discs in grass mode.

This chapter describes the conversion for grass mode and maize mode during the transition period.

Grass mode can be operated with the installed corn conditioner only during the transition period and for a maximum of 3 days.

Grass and maize mode for the transition period (max. 3 days)

Prerequisites for grass and maize mode:

- ✓ The clamping bar has been removed, *refer to page 256*.
- ✓ The grass channel and the corn conditioner have been installed and connected to each other, *refer to page 287*.

Prerequisites for grass mode:

- ✓ The kraftband has been removed, *refer to page 294*.
- ✓ The grass channel has been retracted, *refer to page 295*.
- ✓ The ventilation slot has been set, *refer to page 296*.
- ✓ The hydraulic system of the pendulum frame has been set to grass mode, *refer to page 241*.
- ✓ The grain capture sheet has been removed, *refer to page 242*.
- ✓ The EasyFlow header has been mounted, *refer to page 305*.
- ✓ The season setting in the terminal has been adjusted to grass mode, *refer to page 209*.
- ✓ The lifting unit has been calibrated, *refer to page 184*.

Prerequisites for maize mode:

- ✓ The corn conditioner has been retracted, *refer to page 290*.
- ✓ The kraftband has been attached, *refer to page 291*.
- ✓ The ventilation slot has been set, *refer to page 292*.
- ✓ The hydraulic system of the pendulum frame has been set to maize mode, *refer to page 292*.
- ✓ The grain capture sheet has been installed, *refer to page 262*.

✓ The EasyCollect header, *refer to page 321* or XCollect header, *refer to page 313* has been mounted.
✓ The season setting in the terminal has been adjusted to maize mode, *refer to page 209*.
✓ The lifting unit has been calibrated, *refer to page 184*.

Access to the corn conditioner/grass channel

The corn conditioner or the grass channel is accessed from the right side of the machine, behind the side hood on the right.

Prerequisites for installation and removal

- The side hood on the right is open.
- The rear axle has been completely raised using the keypad.
- The machine is shut down and secured, *refer to page 34*.

Dismounting the crop flow cover

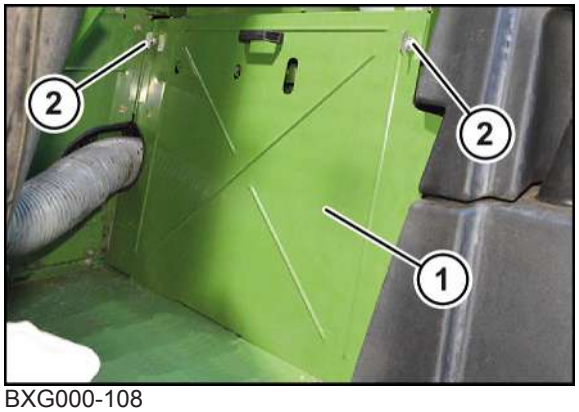

BXG000-108

▶ To remove the cover (1), unlock the quarter turn fasteners (2).

Set down the cover (1) outside the machine.

If the corn conditioner has been installed

▶ Remove the corn conditioner, *refer to page 233*.

If only the grass channel has been installed

▶ Remove the grass channel, *refer to page 256*.

▶ Remove the terminal strip, *refer to page 256*.

If the corn conditioner and the grass channel have been installed and connected to each other, maize or grass mode can be directly adjusted.

14.1 Installing grass channel

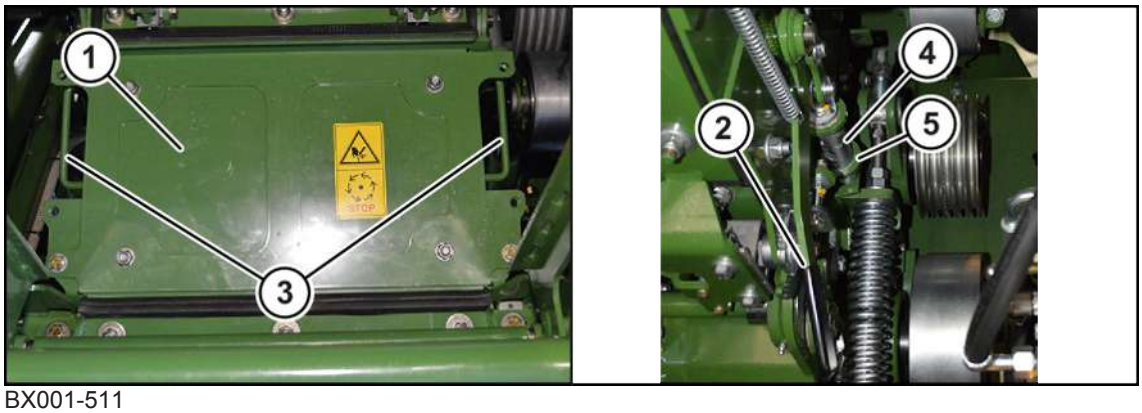

BX001-511

- Swivel lever (2) upward, right and left.
- Push the grass channel (1) by the handles (3) into the chute until the pins (4) can be inserted into the locking (5).
- To lock the grass channel, swivel the lever (2) downwards, on right and left.

Checking retaining bolt of grass channel

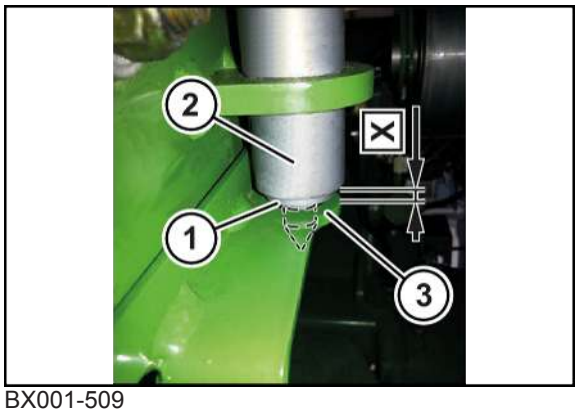

BX001-509

Checking retaining bolt of grass channel/corn conditioner:

- Make sure that the retaining bolt of grass channel/corn conditioner (1) rests on both sides on the grass channel or corn conditioner (3).
- Check dimension X.
  - ⇨ If the dimension is X=4-6 mm, the grass channel is properly attached.
  - ⇨ If the dimension is not X=4-6 mm, the retaining bolt must be adjusted, *refer to page 411*.

14.2 Installing corn conditioner

Overview

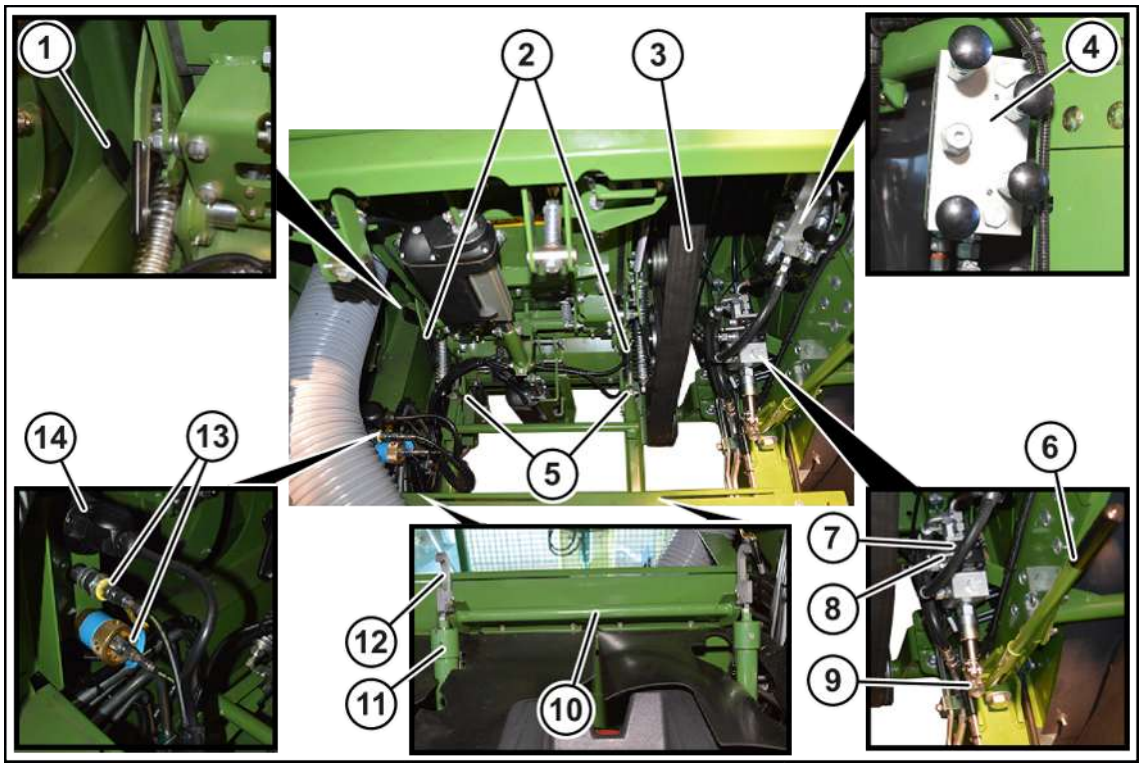

BX001-502

1	Locking lever swivel device	9	Holder for lever
2	Locking lever corn conditioner/grass channel	10	Cylinder retainer
3	Kraftband	11	Cylinder
4	Hydraulic block corn conditioner	12	Catch hook
5	Holder for catch hook	13	Lubrication line
6	Lever for hand pump	14	Power supply cable
7	Hand pump		
8	Switching valve on hand pump		

Functions on the control block of the corn conditioner

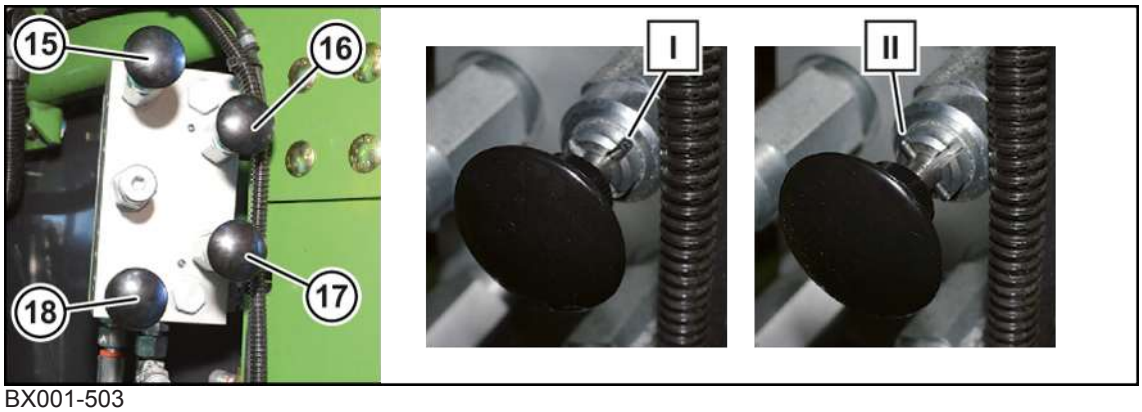

BX001-503

15	Retract cylinder	17	Raise swivel device
16	Extend cylinder	18	Lower swivel device

I = The valve is locked. The roll pin is in the deep groove.

I = The valve is released. The roll pin is in the flat groove.

Swivelling down the swivel device

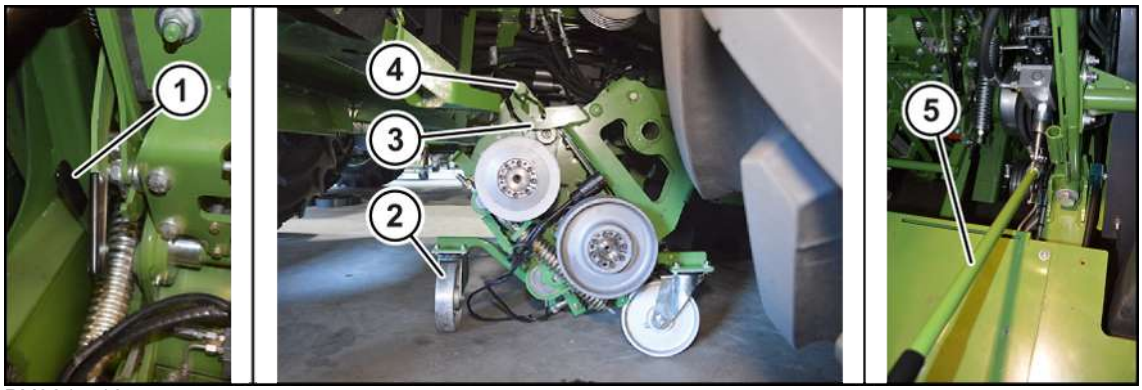

BX001-510

- Loosen the valve (18), lock the valves (16, 17, 19), *refer to page 285*.
- Place the hand pump (5) lever in the holder of the hand pump.
- To release the swivel device, swivel the locking lever (1) forwards and simultaneously pump the hand pump (5) lever several times.
- Lower the swivel device all the way by pumping the hand pump (5) lever.
- Push the corn conditioner from the right side and centre it under the machine.
- Until the holders (4) are located above the catch hooks (3), push the corn conditioner until it is centred in the swivel device.

Swivelling the corn conditioner upwards

- Loosen the valve (19), lock the valves (16, 17, 18), *refer to page 285*.
- Raise the corn conditioner until the support rollers (2) can be removed.
- Lock the valve (19).
- Remove the support rollers and place in the tool box.
- Loosen the valve (19).
- Swivel up the swivel device until the swivel device engages.

The swivel device is engaged when the pumping movement becomes noticeably more difficult.

Swivelling in the swivel device

- Loosen the valve (19), lock the valves (16, 17, 18),*refer to page 300*.
- Swivel up the swivel device by making pumping movements until the swivel device engages.

The swivel device is engaged when the pumping movement becomes noticeably more difficult.

Checking that the swivel device is locked

- Loosen the valve (18), lock the valves (16, 17, 19),*refer to page 300*.
- Pump the hand pump lever.
  - ⇨ If the swivel device does not lower, the swivel device is correctly locked.
  - Locking the valves (16, 17, 18, 19), *refer to page 285*.

⇨ If the swivel device lowers, swivel in the swivel device again.

14.3 Connecting corn conditioner to grass channel

NOTICE

Damage to corn conditioner by continuous operation in the grass mode

If the forage harvester is operated continuously for longer than three days in grass mode with the corn conditioner installed, the corn conditioner may be damaged.

- Operate the forage harvester in grass mode with the corn conditioner installed for a maximum of three days.
- To prevent damaging the corn conditioner, remove the corn conditioner if using grass mode for longer.

For an overview of the tightening torques, *refer to page 424*.

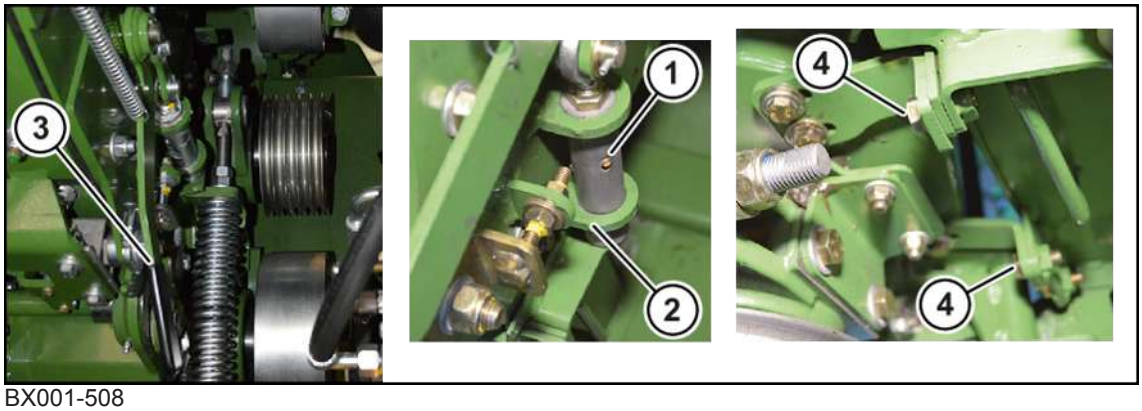

BX001-508

- To connect the corn conditioner to the grass channel, mount two screw connections (4) on the right and left.

Mounting power supply cable and lubrication lines

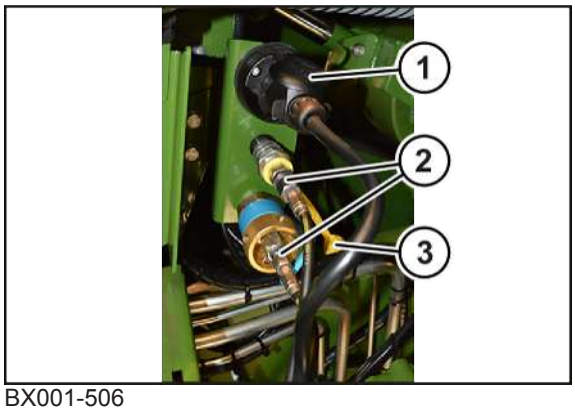

BX001-506

- Insert the power supply cable (1) into the socket.
- Screw on the lubrication lines (2).
- Close the covers (3).

The crop flow can now be used for grass mode.

14.4 Switching from grass to maize mode

This chapter describes the conversion from grass to maize mode for the transition period. It is assumed that the corn conditioner and the grass channel have been installed and connected to each other.

Overview

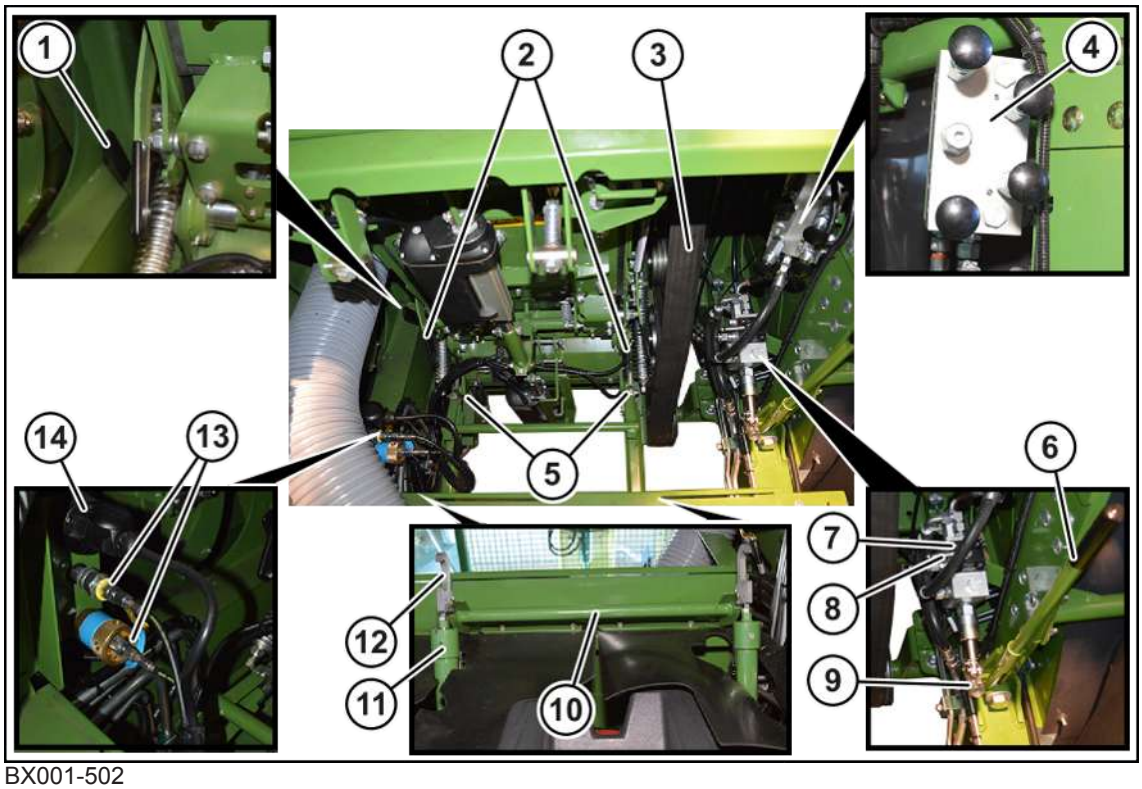

BX001-502

1	Locking lever swivel device	9	Holder for lever
2	Locking lever corn conditioner/grass channel	10	Cylinder retainer
3	Kraftband	11	Cylinder
4	Hydraulic block corn conditioner	12	Catch hook
5	Holder for catch hook	13	Lubrication line
6	Lever for hand pump	14	Power supply cable
7	Hand pump		
8	Switching valve on hand pump		

Functions on the control block of the corn conditioner

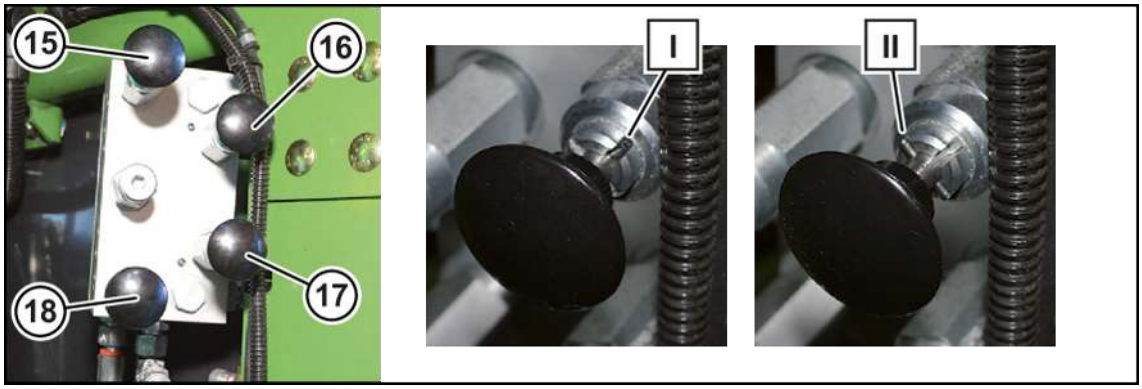

BX001-503

15	Retract cylinder	17	Raise swivel device
16	Extend cylinder	18	Lower swivel device

I = The valve is locked. The roll pin is in the deep groove.

I = The valve is released. The roll pin is in the flat groove.

Access to the corn conditioner/grass channel

The corn conditioner or the grass channel is accessed from the right side of the machine, behind the side hood on the right.

Prerequisites for installation and removal

- The side hood on the right is open.
- The rear axle has been completely raised using the keypad.
- The machine is shut down and secured, *refer to page 34*.

Dismounting the crop flow cover

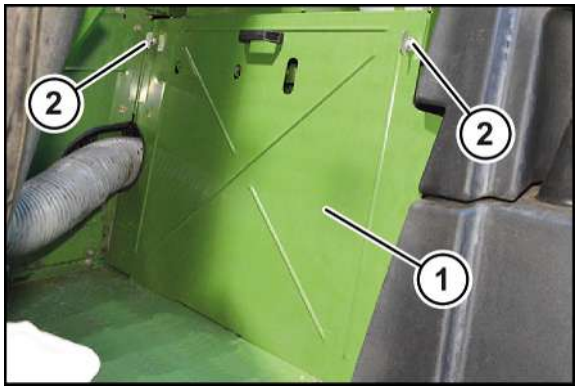

BXG000-108

▶ To remove the cover (1), unlock the quarter turn fasteners (2).

Set down the cover (1) outside the machine.

Hooking the catch hooks into the corn conditioner

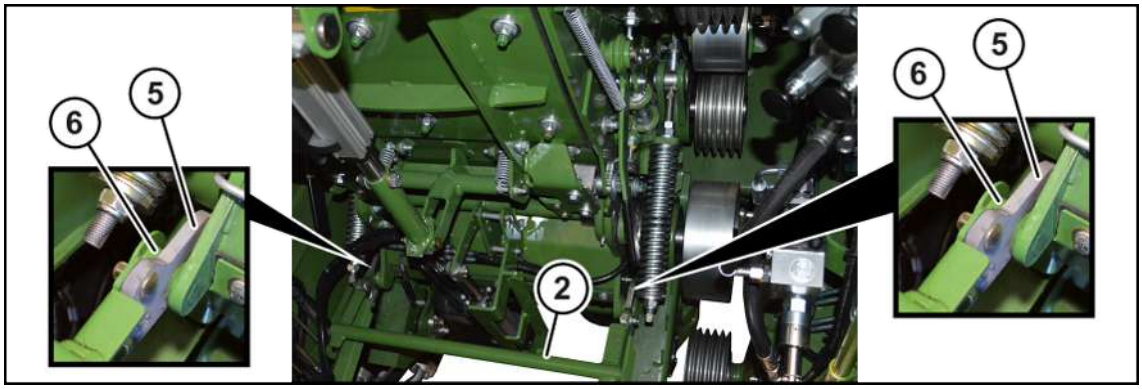

BX001-516

- Open the valve (17), lock the valves (16, 18, 19),*refer to page 300*.
- Raise the cylinder holder (2) and place the catch hooks (5) in the holders (6).

Releasing the grass channel

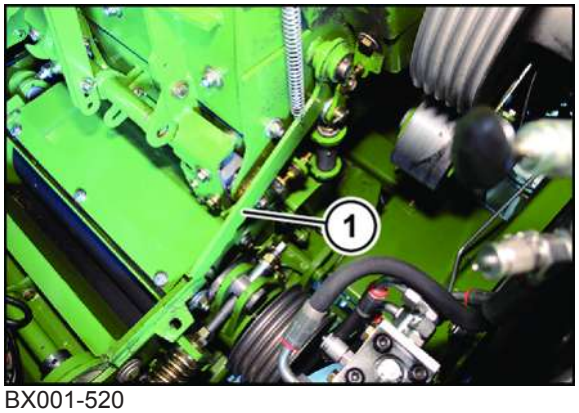

BX001-520

▶ To release the grass channel, swivel the lever (1) upwards, on the right and left.

Moving the corn conditioner forwards

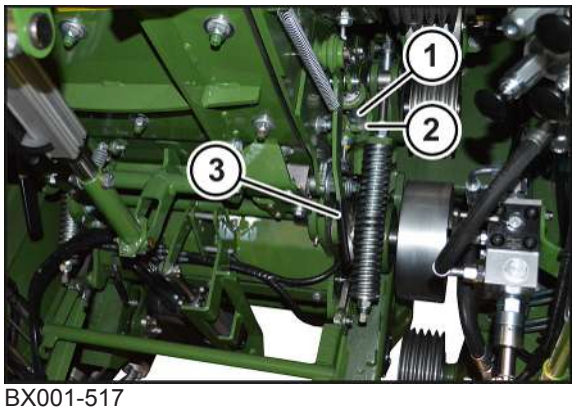

BX001-517

▶ Move the corn conditioner forwards by pumping the lever for hand pump until the bolt (1) can be inserted into the locking (2).

▶ To lock the corn conditioner, swivel the lever (3) downwards, on the right and left.

⚠ WARNING

Crushing hazard caused by sliding corn conditioner

If the corn conditioner is not secured by the catch hooks, it may start to slip when it becomes detached and injure people

- Leave the catch hooks on the holding fixtures of the corn conditioner during maize mode.

Checking retaining bolt of grass channel

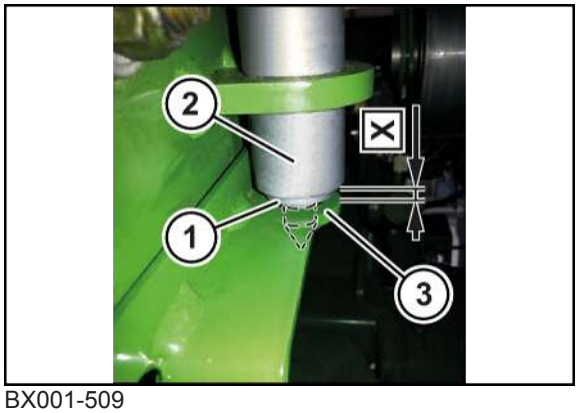

BX001-509

Checking retaining bolt of grass channel/corn conditioner:

- Make sure that the retaining bolt of grass channel/corn conditioner (1) rests on both sides on the grass channel or corn conditioner (3).
- Check dimension X.
  - ⇨ If the dimension is X=4-6 mm, the grass channel is properly attached.
  - ⇨ If the dimension is not X=4-6 mm, the retaining bolt must be adjusted, *refer to page 411*.

Attaching kraftband

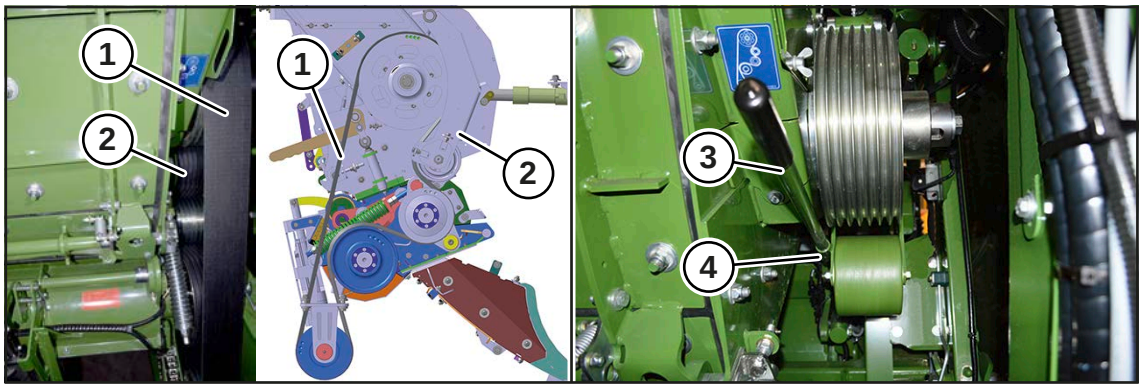

BXG000-107

- In order to be able to attach the kraftband (1), insert the manual lever (3) into the sleeve (4) on the tensioning arm (2) and press the tensioning arm (2) down towards the front.
- Attach the kraftband (2).
- Remove the manual lever (3).
- Pull the tensioning arm (2) upwards until the belt is slightly tensioned.

14.5 Adjusting ventilation slot

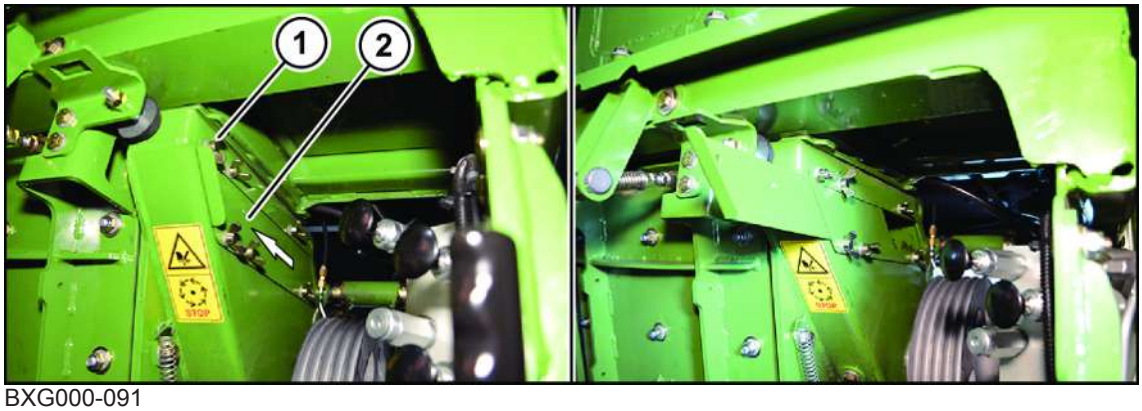

BXG000-091

To ensure an adequate discharge capacity during maize mode, the cover of the ventilation slot should be removed.

Removing

- Loosen the wing nuts (1).
- Pull out the cover sheet (2) backwards.
- Tighten the wing nuts (1).

Store the cover sheet in a safe place for subsequent reinstallation, e.g. In the tool box.

Mounting the crop flow cover

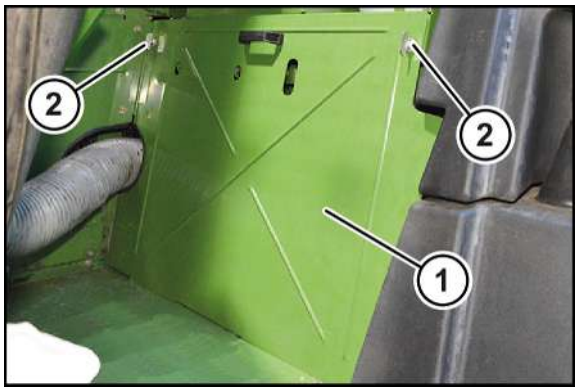

BXG000-108

- Attach the cover (1) and lock with the quarter turn fasteners (2).

14.6 Switching from maize to grass mode

NOTICE

Damage to corn conditioner by continuous operation in the grass mode

If the forage harvester is operated continuously for longer than three days in grass mode with the corn conditioner installed, the corn conditioner may be damaged.

- Operate the forage harvester in grass mode with the corn conditioner installed for a maximum of three days.
- To prevent damaging the corn conditioner, remove the corn conditioner if using grass mode for longer.

This chapter describes the conversion for maize to grass mode for the transition period. It is assumed that the corn conditioner and the grass channel have been installed and connected to each other.

Overview

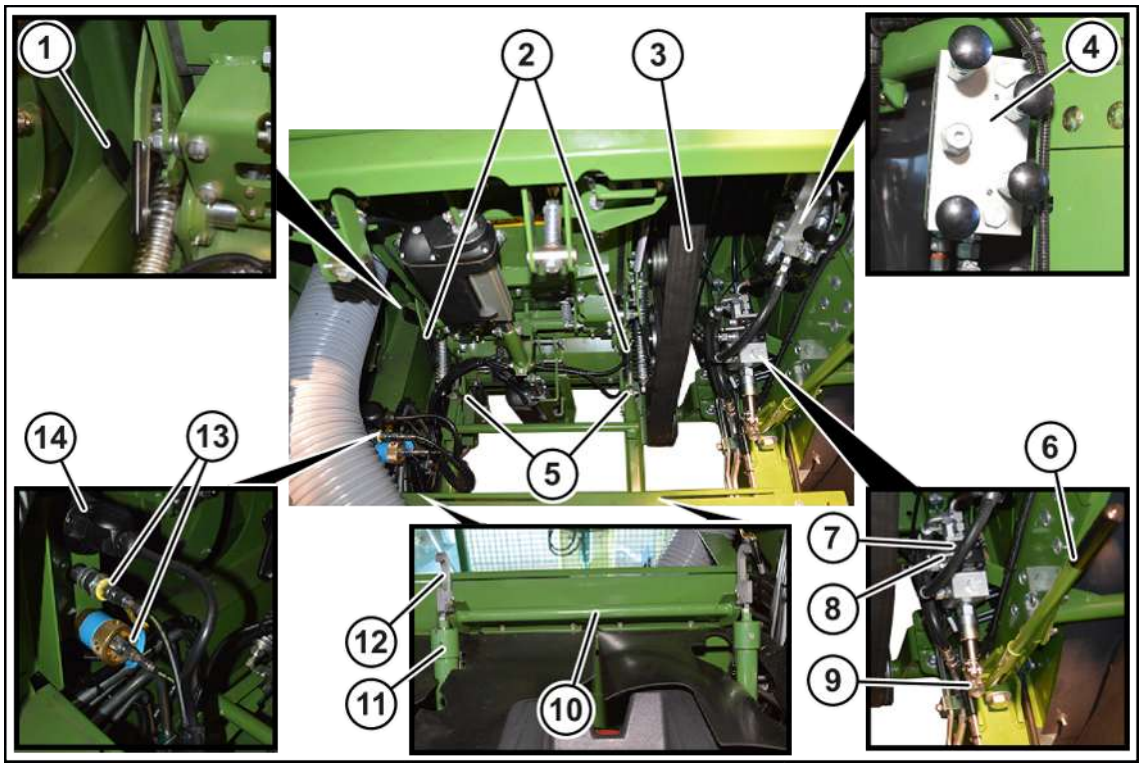

BX001-502

1	Locking lever swivel device	9	Holder for lever
2	Locking lever corn conditioner/grass channel	10	Cylinder retainer
3	Kraftband	11	Cylinder
4	Hydraulic block corn conditioner	12	Catch hook
5	Holder for catch hook	13	Lubrication line
6	Lever for hand pump	14	Power supply cable
7	Hand pump		
8	Switching valve on hand pump		

Functions on the control block of the corn conditioner

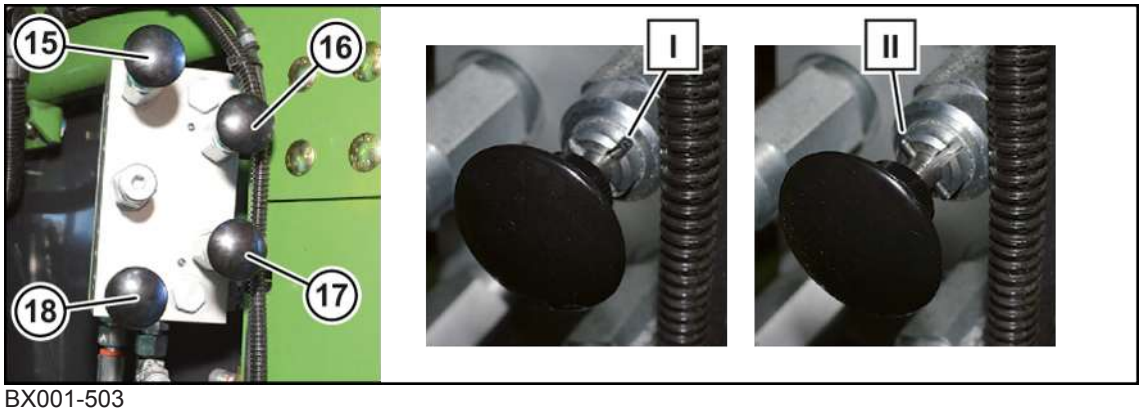

BX001-503

15 Retract cylinder
16 Extend cylinder
17 Raise swivel device
18 Lower swivel device

I = The valve is locked. The roll pin is in the deep groove.

I = The valve is released. The roll pin is in the flat groove.

Access to the corn conditioner/grass channel

The corn conditioner or the grass channel is accessed from the right side of the machine, behind the side hood on the right.

Prerequisites for installation and removal

- The side hood on the right is open.
- The rear axle has been completely raised using the keypad.
- The machine is shut down and secured, *refer to page 34*.

Dismounting the crop flow cover

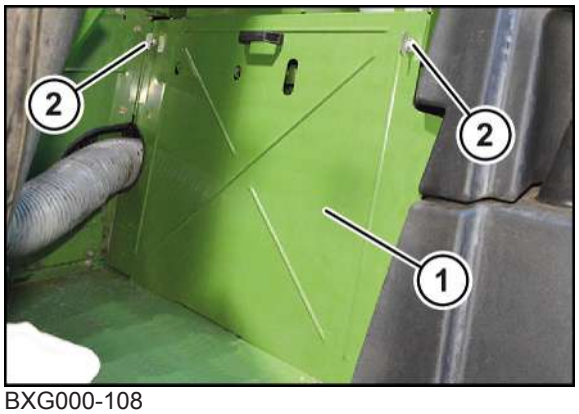

BXG000-108

▶ To remove the cover (1), unlock the quarter turn fasteners (2).

Set down the cover (1) outside the machine.

Removing kraftband

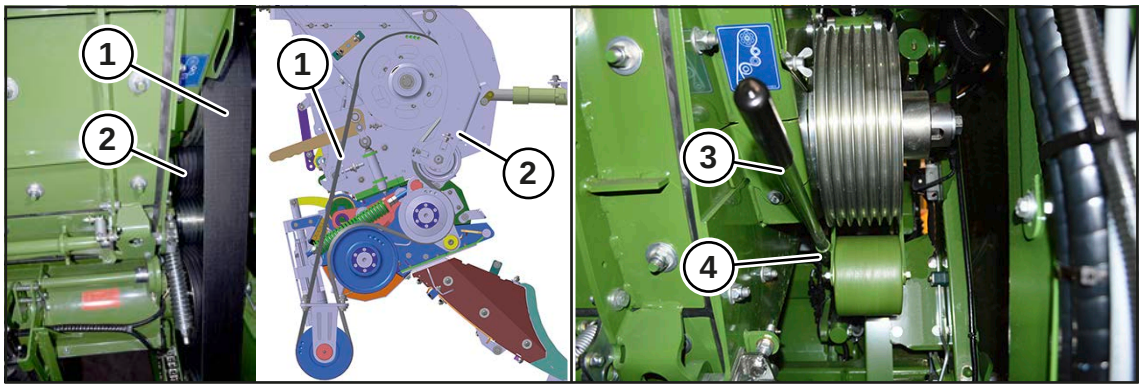

BXG000-107

▶ In order to be able to remove the kraftband (1), insert the manual lever (3) into the sleeve (4) on the tensioning arm (2) and press the tensioning arm (2) down towards the front.

▶ Remove the kraftband (2).

▶ Remove the manual lever (3).

Moving the corn conditioner to the rear

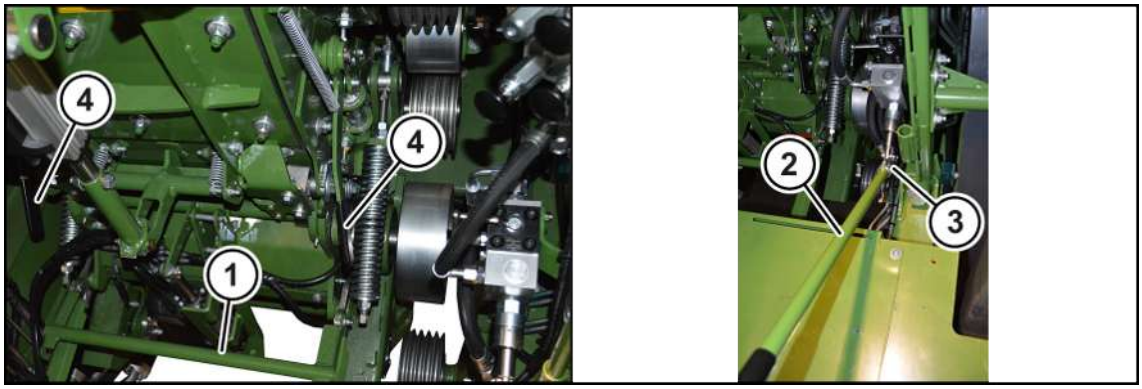

BX001-507

- Loosen the valve (16), lock the valves (17, 18, 19), *refer to page 293*.

WARNING! There is a crush hazard if the corn conditioner is not secured with the catch hooks (13) of the cylinders (12), as the corn conditioner may fall out unintentionally when released. Before releasing the corn conditioner, ensure that the catch hooks of the cylinders are hooked into the holders (5) of the corn conditioner.

- To release the corn conditioner, swivel the lever (4) upwards, on the right and left.

NOTICE! When retracting the cylinders, the cylinder holder may catch on the cylinders. This may damage the components. When retracting the cylinders, observe the cylinder holder and raise manually if required.

- Place the lever for the hand pump (2) in the holder (3) of the hand pump.
- Move the corn conditioner backwards, by pumping the hand lever, until the corn conditioner can no longer be moved.

Locking grass channel

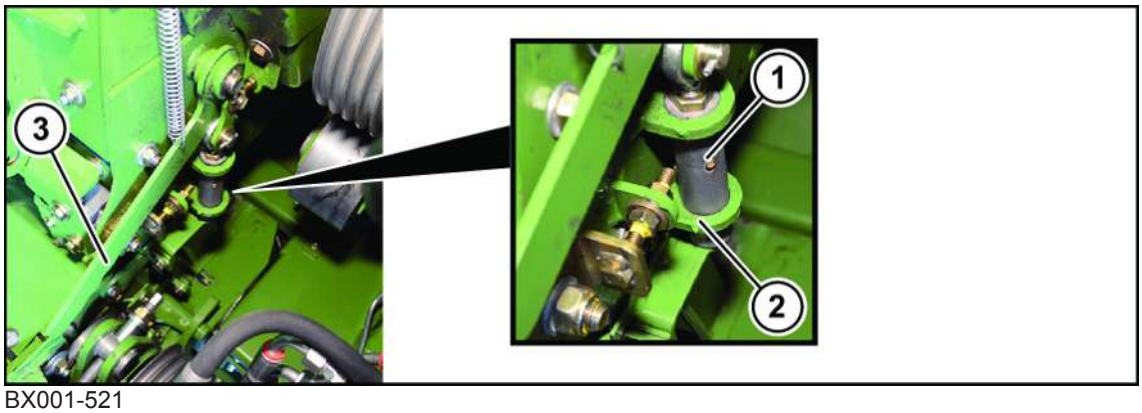

BX001-521

- Move the corn conditioner to the rear by making pumping movements until the bolt (1) can be inserted into the locking (2) of the grass channel.
- To lock the grass channel, swivel the lever (3) downwards, right and left side.
- Raise the cylinder holder and place the cylinders in the holder.

Checking retaining bolt of grass channel

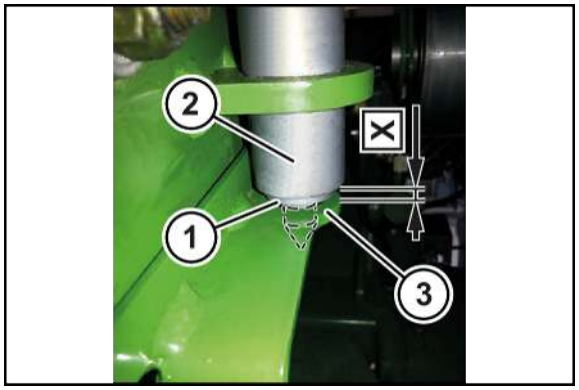

BX001-509

Checking retaining bolt of grass channel/corn conditioner:

- Make sure that the retaining bolt of grass channel/corn conditioner (1) rests on both sides on the grass channel or corn conditioner (3).
- Check dimension X.
  - ⇨ If the dimension is X=4-6 mm, the grass channel is properly attached.
  - ⇨ If the dimension is not X=4-6 mm, the retaining bolt must be adjusted, *refer to page 411*.

14.7 Adjusting ventilation slot

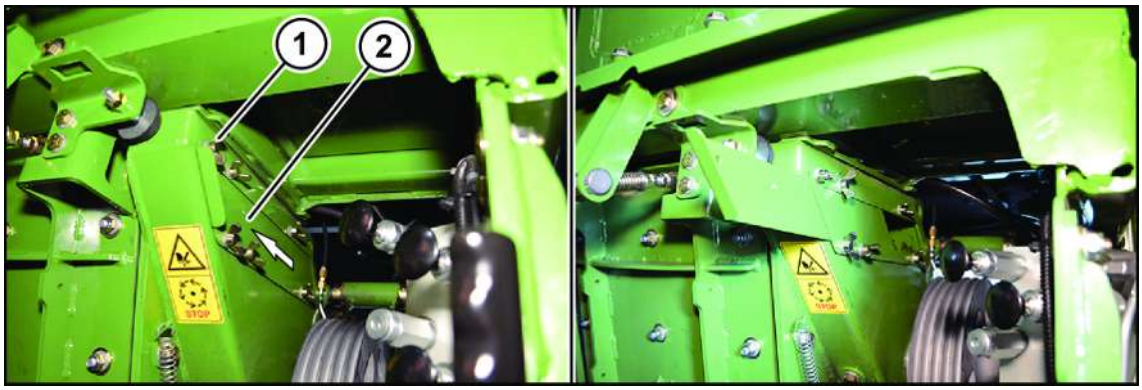

BXG000-091

The ventilation slot is closed at the factory.

Open the ventilation slot no further than half way. If the ventilation slot's opening is too large, too much air is directed against the air flow in the chopping drum. This may impair the discharge capacity.

Adjusting the ventilation slot cover

- Loosen the wing nuts (1).
- Pull the cover sheet (2) backwards to the required position.
- Tighten the wing nuts (1).

Mounting the crop flow cover

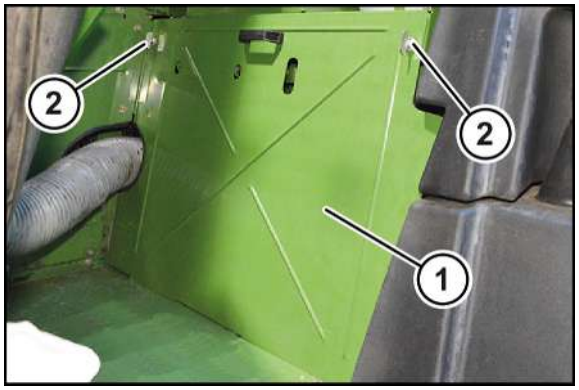

BXG000-108

- Attach the cover (1) and lock with the quarter turn fasteners (2).

15 Start-up – Corn conditioner with discs

✓ The machine is shut down and secured, *refer to page 34* .

✓ The corn conditioner or the grass channel has been removed, *refer to page 233* or *refer to page 238*.

For an overview of the tightening torques, *refer to page 424*.

Overview

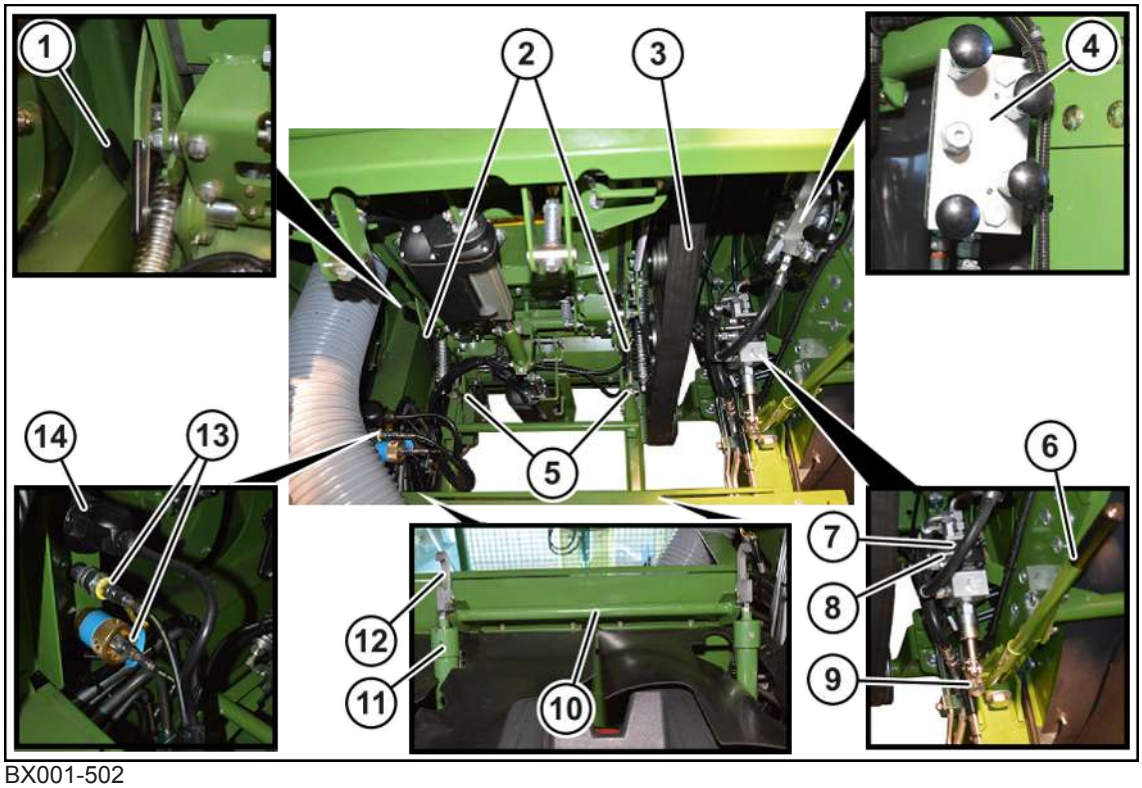

BX001-502

1	Locking lever swivel device	9	Holder for lever
2	Locking lever corn conditioner/grass channel	10	Cylinder retainer
3	Kraftband	11	Cylinder
4	Hydraulic block corn conditioner	12	Catch hook
5	Holder for catch hook	13	Lubrication line
6	Lever for hand pump	14	Power supply cable
7	Hand pump		
8	Switching valve on hand pump		

Mounting deflector sheet

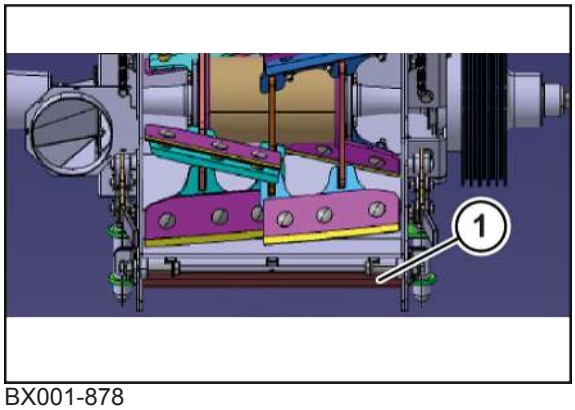

BX001-878

WARNING! Risk of injury from rotating parts.

- Wear protective clothing and secure the rotor.
- Remove the sealing profile (1).

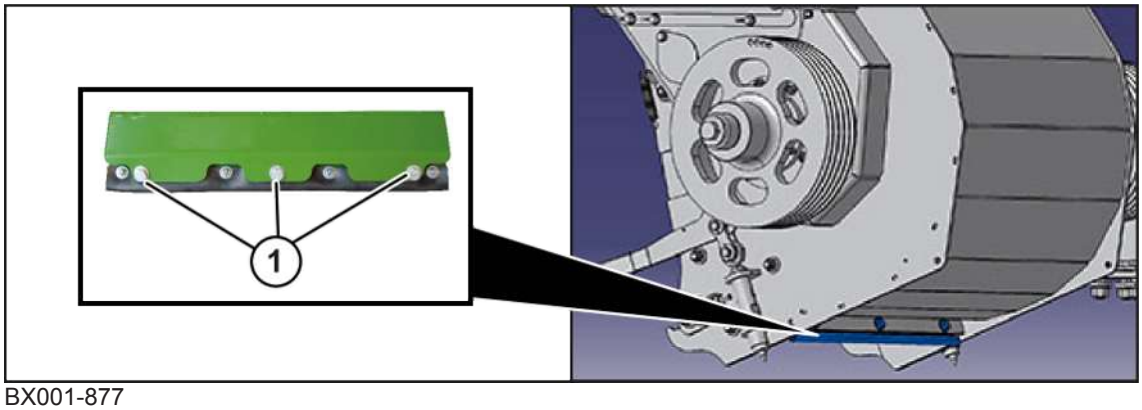

BX001-877

- Mount the deflector sheet from below into the discharge accelerator by means of the screws (1).

Mounting spacer plate

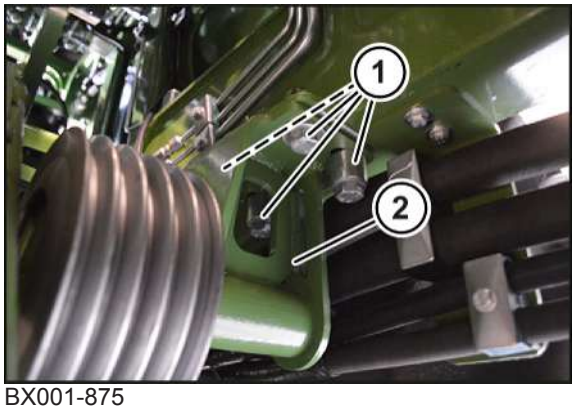

BX001-875

- Label the current position of the bearing block (2).
- Dismount the screw connections (1) from the bearing block (2) and write down the positions.

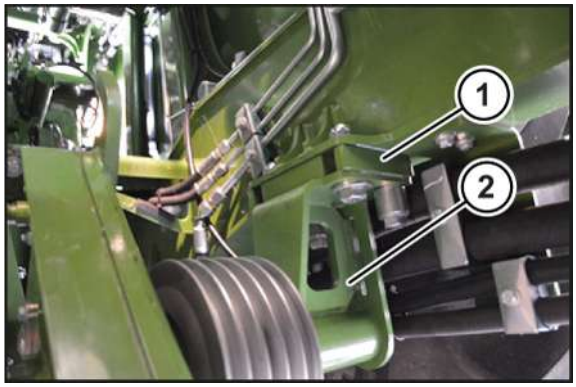

BX001-876

- Position the bearing block (2) with the spacer plate (1) at the point previously marked.
- Re-attach the screw connections M16 with a tightening torque of M_a=197 Nm and the screw connections M12 with a tightening torque of M_a=81 Nm to the positions previously noted.

Functions on the control block of the corn conditioner

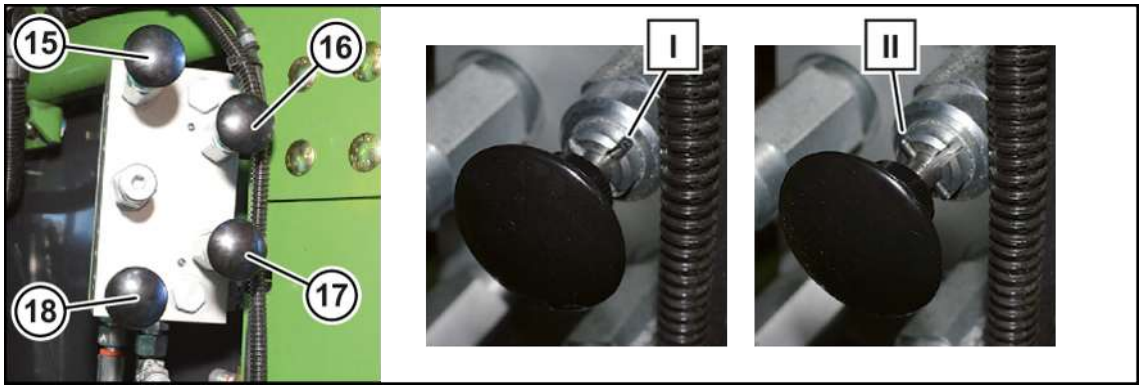

BX001-503

15	Retract cylinder	17	Raise swivel device
16	Extend cylinder	18	Lower swivel device

I = The valve is locked (the roll pin is in the deep groove).

II = The valve is open (the roll pin is in the flat groove).

Swivelling down the swivel device

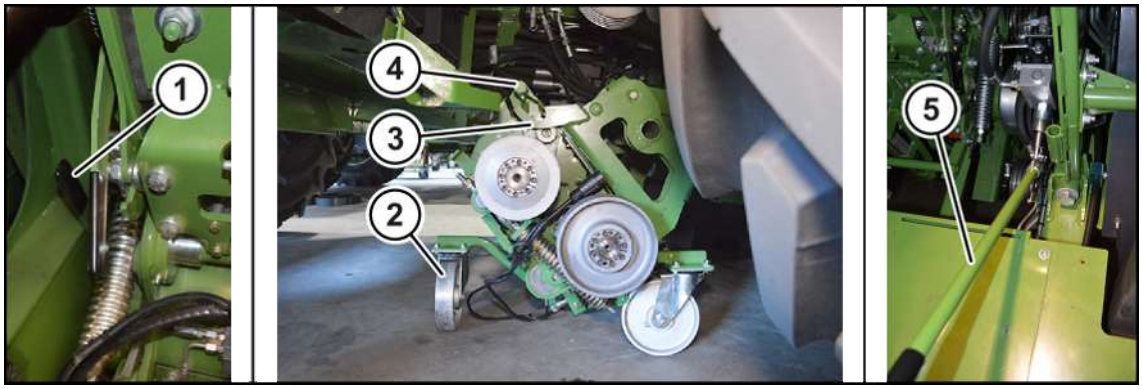

BX001-510

- Loosen the valve (18), lock the valves (16, 17, 19),*refer to page 300*.
- Place the hand pump (5) lever in the holding fixture of the hand pump.
- To unlock the swivel device, push the locking lever (1) forwards and simultaneously pump the lever for hand pump (5) several times.
- Lower the swivel device completely by pumping the lever for the hand pump (5).
- Push the corn conditioner from the right side and centre it under the machine.
- Until the holding fixtures (4) are located above the catch hooks (3), push the corn conditioner until it is centred in the swivel device.

Swivelling the corn conditioner upwards

- Loosen the valve (19), lock the valves (16, 17, 18),*refer to page 300*.
- Raise the corn conditioner until the distance between the corn conditioner and the ground is approx. 30 cm.
- Lock the valve (19).
- Remove the support rolls and place in the tool box.
- Loosen the valve (19).
- Swivel up the swivel device until the swivel device engages.

The swivel device is engaged when the pumping movement becomes noticeably more difficult.

Swivelling in the swivel device

- Loosen the valve (19), lock the valves (16, 17, 18),*refer to page 300*.
- Swivel up the swivel device by making pumping movements until the swivel device engages.

The swivel device is engaged when the pumping movement becomes noticeably more difficult.

Checking that the swivel device is locked

- Loosen the valve (18), lock the valves (16, 17, 19),*refer to page 300*.
- Pump the hand pump lever.
  - ⇨ If the swivel device does not lower, the swivel device is correctly locked.
  - Locking the valves (16, 17, 18, 19), *refer to page 285*.
  - ⇨ If the swivel device lowers, swivel in the swivel device again.

Hooking the catch hooks into the corn conditioner

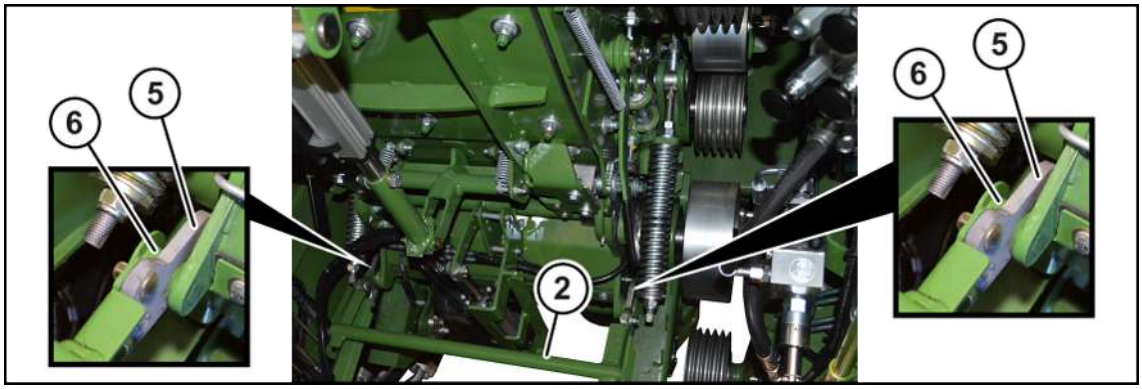

BX001-516

- Open the valve (17), lock the valves (16, 18, 19),*refer to page 300*.
- Raise the cylinder holder (2) and place the catch hooks (5) in the holders (6).

Moving the corn conditioner forwards

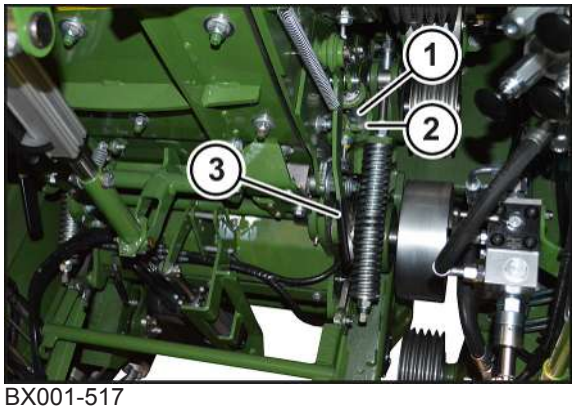

BX001-517

▶ Move the corn conditioner forwards by pumping the lever for hand pump until the bolt (1) can be inserted into the locking (2).

▶ To lock the corn conditioner, swivel the lever (3) downwards, on the right and left.

⚠ *WARNING*

Crushing hazard caused by sliding corn conditioner

If the corn conditioner is not secured by the catch hooks, it may start to slip when it becomes detached and injure people

▶ Leave the catch hooks on the holding fixtures of the corn conditioner during maize mode.

Checking retaining bolt of grass channel

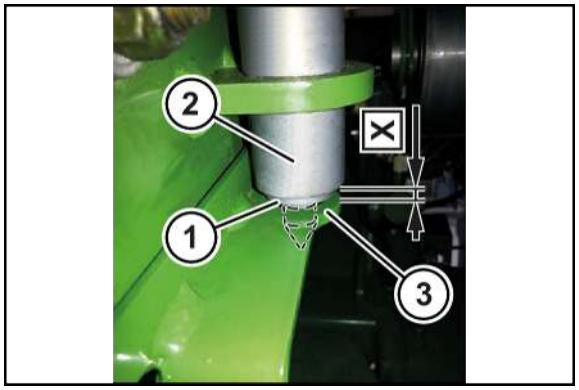

BX001-509

Checking retaining bolt of grass channel/corn conditioner:

- Make sure that the retaining bolt of grass channel/corn conditioner (1) rests on both sides on the grass channel or corn conditioner (3).
- Check dimension X.
  - ⇨ If the dimension is X=4-6 mm, the grass channel is properly attached.
  - ⇨ If the dimension is not X=4-6 mm, the retaining bolt must be adjusted, *refer to page 411*.

Mounting power supply cable and lubrication lines

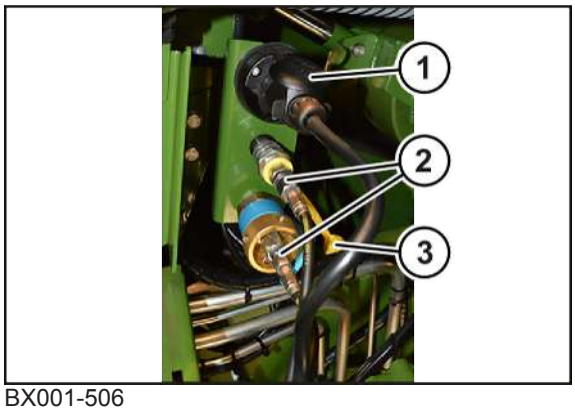

BX001-506

- Insert the power supply cable (1) into the socket.
- Screw on the lubrication lines (2).
- Close the covers (3).

Attaching kraftband

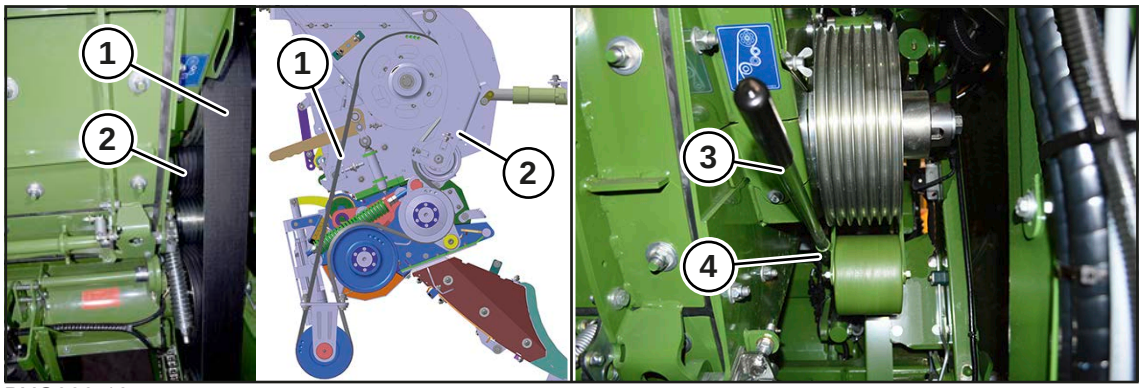

BXG000-107

- In order to be able to attach the kraftband (1), insert the manual lever (3) into the sleeve (4) on the tensioning arm (2) and press the tensioning arm (2) down towards the front.
- Attach the kraftband (2).
- Remove the manual lever (3).
- Pull the tensioning arm (2) upwards until the belt is slightly tensioned.

Calibrating corn conditioner

- Calibrate corn conditioner, *refer to page 189*

16 Start-up – Attaching and removing EasyFlow

⚠ WARNING

Risk of injury due to non-observance of relevant safety notices

If the relevant safety notices are not observed, persons may get seriously injured or killed.

- To avoid accidents, the basic safety instructions must be read and observed, *refer to page 19*.

⚠ WARNING

Risk of injury due to non-observance of safety instructions

If the relevant safety routines are not observed, persons may be seriously injured or killed.

- The safety routines must be read and observed to avoid accidents, *refer to page 34*.

⚠ WARNING

Risk of injury due to unexpected movement of the header and moving components!

There is an increased risk of injury when mounting and dismounting headers to or from the machine.

- Switch off the forage harvester engine, remove the ignition key and take it with you.
- Secure machine by means of wheel chocks against rolling away.
- Wait until all machine parts have come to a complete stop.
- Make sure that there is no one between forage harvester and header.
- Ensure that nobody reaches into the clearance between the header and machine.
- Before working under or on the raised header, support the header securely.
- There must be nobody in the swivel range while the header is being swivelled from the transport into the working position and vice versa.

NOTICE

Damage to the machine by turning the quick connector without attached header

If the quick connector is driven without the header attached, the machine may be damaged, as the clutch disc of the quick connector is not controlled.

- Ensure that the quick connector is not driven unless a header has been attached.
- If the intake is to be run without a header for maintenance purposes, remove the universal shaft from the forage harvester beforehand.

Only those headers may be attached which have been type tested by the manufacturer and approved for use, *refer to page 75*.

When operating the forage harvester with a header, read and follow the operating instructions supplied with the header before using it.

Prerequisites for attaching and removing a header:

- ✓ The machine has been safely parked, *refer to page 27*.
- ✓ There must be adequate room to manoeuvre the forage harvester.
- ✓ All prerequisites for grass mode / operation with the direct cut header *refer to page 232* or maize mode *refer to page 255* are met.

16.1 Mounting EasyFlow

16.1.1 Preparing the intake

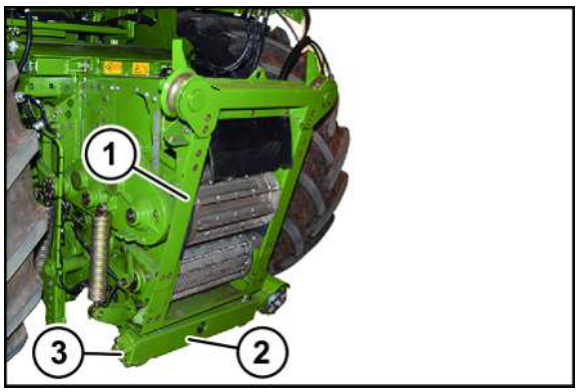

BX001-522

To prepare the forage harvester for attachment of the header:

- Lower the intake (1) of the forage harvester all the way.
- Align the pendulum tube (2) horizontally on the intake.

Version with "Mechanical header locking with universal shaft":

- Remove the locking pins (3).

Prepare quick-coupler (for "Hydraulic comfortable header locking with quick-coupler" version)

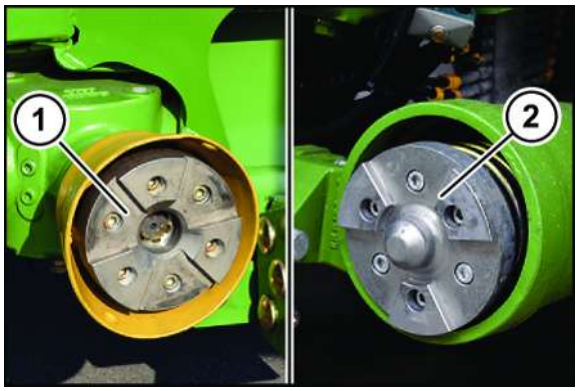

BX001-523

To prepare the coupling for the attachment of the header:

- Clean the clutch disc (1) on the header.
- Clean the coupling journal (2) on the machine.

16.1.2 Connecting EasyFlow

For "Mechanical header locking with universal shaft" version

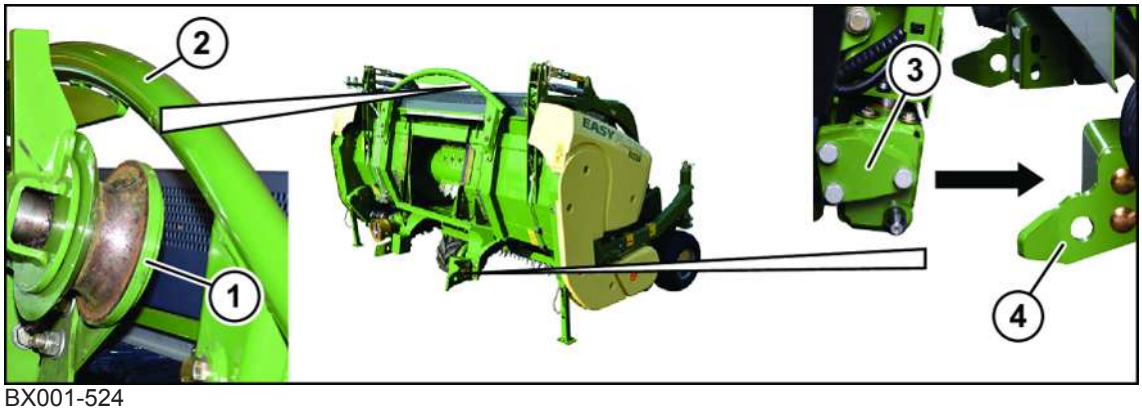

BX001-524

✓ The header has been prepared for attachment, see operating instructions for the header.
✓ The intake has been prepared for attachment, *refer to page 306*.

WARNING! Crush hazard due to moving machine parts! Ensure that there is nobody between the machine and the header.

▶ Drive the machine up to the header until the roll guides (1) are under the pendulum crossbar (2).

▶ Slowly raise the lifting unit and ensure that the pendulum crossbar (2) is correctly and completely supported by the roll guides (1).

During the lifting process the centring triangles (3) run into the locking sheets (4).

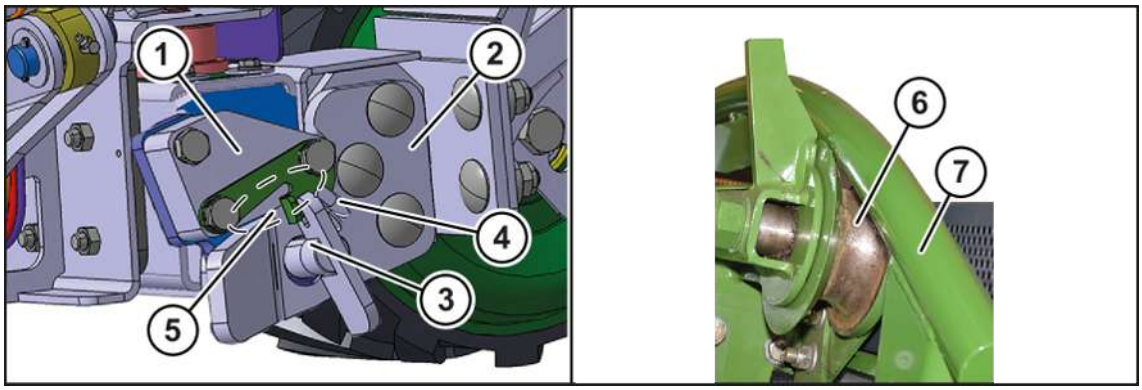

BX001-862

▶ Shut down and safeguard the machine, *refer to page 34*.

▶ Check whether the centring triangles (1) are on the contour (5) of the locking sheets (2) and whether the pendulum crossbar (7) is completely in the grooves of the roller guides (6).

▶ Fit the locking pins (3) and secure each one with a tube linchpin (4).

▶ Slide the universal shaft out of the holder on the forage harvester and onto the drive journal of the header until the slider pin engages.

▶ Secure the universal shaft guard on the forage harvester against turning with the supporting chain.

For "Hydraulic comfortable header locking with quick-coupler" version

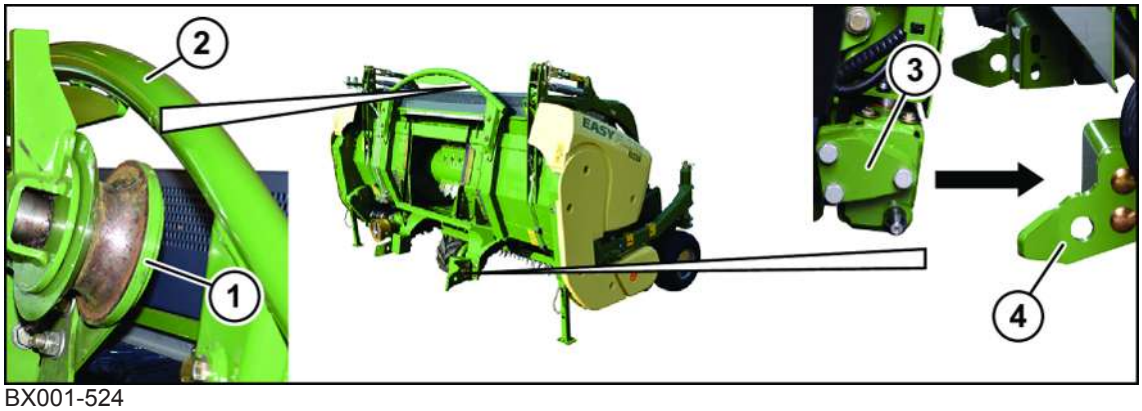

BX001-524

✓ The header has been prepared for attachment, see operating instructions for the header.
✓ The intake has been prepared for attachment, *refer to page 306*.

Crush hazard due to moving machine parts! Ensure that there is nobody between the machine and the header.

▶ Drive the machine up to the header until the roll guides (1) are under the pendulum crossbar (2).

▶ Unlock the header locking via the additional keypad, *refer to page 103*.

▶ Slowly raise the lifting unit and ensure that the pendulum crossbar (2) is correctly and completely supported by the roll guides (1).

During the lifting process the centring triangles (3) run into the locking sheets (4).

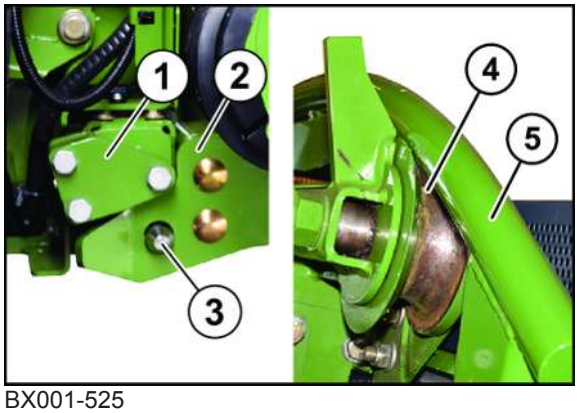

BX001-525

▶ Release the "Open header locking" key.

⇨ Lock the locking pins (3).

▶ Shut down and safeguard the machine, *refer to page 34*.

▶ Check whether the centring triangles (1) are positioned on the locking sheets (2), the locking pin (3) is locked and the roll guides (4) are positioned on the pendulum crossbar (5).

If not:

▶ The locking sheets of the header must be set, see operating instructions for the header – initial start-up "Setting locking sheets".

▶ Note the setting of the clutch disc on the header, see operating instructions for the header – initial start-up "Aligning clutch disc".

16.1.3 Connecting hydraulic hoses

⚠ WARNING

Risk of injury from unexpected movements of the header

If the hydraulic hoses are interchanged when connecting them, the header will not function correctly.

- ▶ Identify hydraulic connections (hose markings).
- ▶ Check that the hose connections are fitted correctly.

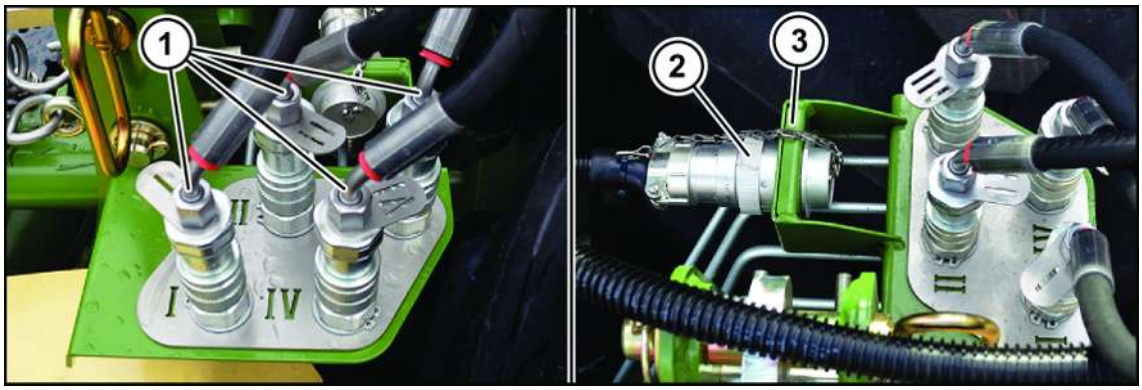

BX001-528

- ▶ Connect the hydraulic hoses (1) to the corresponding plug-in connectors on the grass header. Connect the hydraulic hose I to the plug-in connector I, etc.
- ▶ Fix the plug X 139.2 (2) in the support (3) on the grass header.

16.1.4 Moving parking jacks on right/left into transport position

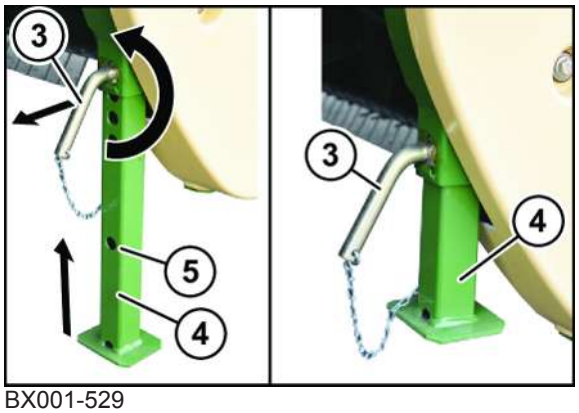

BX001-529

- ▶ On both sides swivel the socket pin (3) of the support jacks (4) 180° upwards and pull it out.
- ▶ Push the support jacks (4) upwards and secure them in the borehole (5) with the socket pin (3). Lock the socket pins (3) by turning them 180° downwards
- ▶ Fold in the support wheels.

16.2 Removing EasyFlow

⚠ WARNING

Risk of injury from movement of the header

If people are in the area of the header when it is being raised or lowered and folded in or out, there is a risk that these people may be caught and injured by the header or the lifting unit.

- When the header is moving, ensure that there is nobody in the area of the header or the lifting unit.

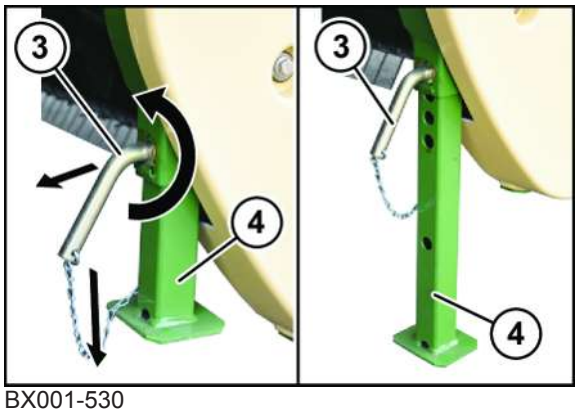

BX001-530

✓ The machine has been shut down and secured, *refer to page 34*.

- On both sides swivel the socket pins (3) of the support jacks (4) 180° upwards and pull them out.
- Pull out the support jacks (4) and lock with the socket pin (3) in the fifth hole from the bottom by turning it 180° downwards.
- Start the diesel engine.
- Fold out the support wheels and lower the grass header onto the ground.

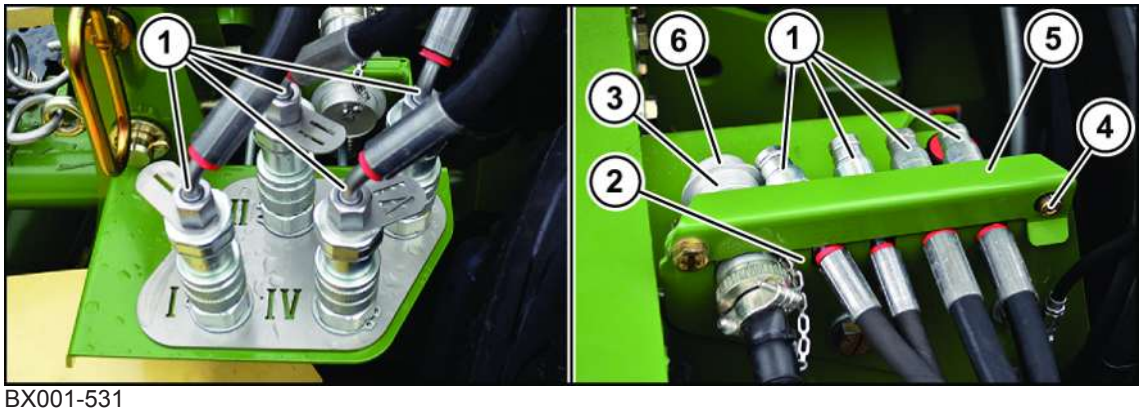

BX001-531

- Shut down and safeguard the machine, *refer to page 270*.
- Loosen the screw (4) and open the lock (5) of the hose support.
- Disconnect the hydraulic hoses (1) from the plug-in connectors and place in the hose support (2) on the intake of the forage harvester.
- Disconnect the plug connection (3) from the machine and place with attached protective cap (6) in the hose support (2).
- Close the lock (5) of the hose support and tighten the screw (4).

For "Mechanical header locking with universal shaft" version

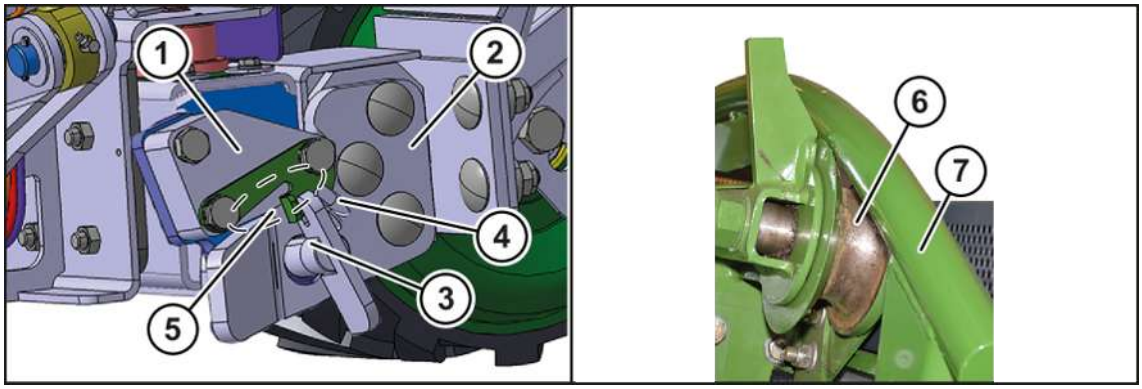

BX001-862

- Press the slider pin of the universal shaft and remove the universal shaft from the drive journal of the header.
- Place the universal shaft in the support/holder on the forage harvester.
- Dismount the tube linchpins (4) and the locking pins (3).
- Start the diesel engine.
- Lower the lifting unit of the forage harvester until the roll guides (6) are not in contact with the pendulum crossbar (7).
- Move the forage harvester back.

For version with “Hydraulic comfort header locking with quick coupler”

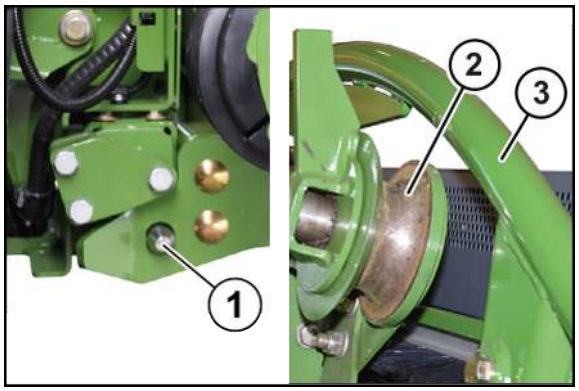

BX001-532

- Start diesel engine.
- Unlock the locking pins (1) via additional keypad.
- Lower the lifting unit of the forage harvester so that the roll guides (2) cannot collide with the mounting chute (3).
- Move the forage harvester back.

16.3 Putting Down EasyFlow

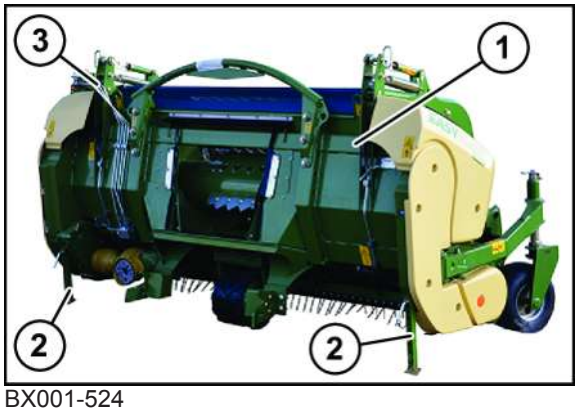

BX001-524

Set the EasyFlow (1) down, with support jacks (2) extended, on a solid and level surface and in a dry and clean place.

- To bring the support jacks into working position: See the operating instructions for the header, chapter Operation – Dismantling the machine "Bring right/left support jacks into working position".
- Park the machine safely, *refer to page 27*.

17 Commissioning – Attaching and removing XCollect

⚠ WARNING

Risk of injury due to non-observance of relevant safety notices

If the relevant safety notices are not observed, persons may get seriously injured or killed.

- To avoid accidents, the basic safety instructions must be read and observed, *refer to page 19*.

⚠ WARNING

Risk of injury due to non-observance of safety instructions

If the relevant safety routines are not observed, persons may be seriously injured or killed.

- The safety routines must be read and observed to avoid accidents, *refer to page 34*.

⚠ WARNING

Risk of injury due to unexpected movement of the header and moving components!

There is an increased risk of injury when mounting and dismounting headers to or from the machine.

- Switch off the forage harvester engine, remove the ignition key and take it with you.
- Secure machine by means of wheel chocks against rolling away.
- Wait until all machine parts have come to a complete stop.
- Make sure that there is no one between forage harvester and header.
- Ensure that nobody reaches into the clearance between the header and machine.
- Before working under or on the raised header, support the header securely.
- There must be nobody in the swivel range while the header is being swivelled from the transport into the working position and vice versa.

NOTICE

Damage to the machine by turning the quick connector without attached header

If the quick connector is driven without the header attached, the machine may be damaged, as the clutch disc of the quick connector is not controlled.

- Ensure that the quick connector is not driven unless a header has been attached.
- If the intake is to be run without a header for maintenance purposes, remove the universal shaft from the forage harvester beforehand.

Only those headers may be attached which have been type tested by the manufacturer and approved for use, *refer to page 75*.

When operating the forage harvester with a header, read and follow the operating instructions supplied with the header before using it.

Prerequisites for attaching and removing a header:

- ✓ The machine has been safely parked, *refer to page 27*.
- ✓ There must be adequate room to manoeuvre the forage harvester.
- ✓ All prerequisites for grass mode / operation with the direct cut header *refer to page 232* or maize mode *refer to page 255* are met.

17.1 Attaching XCollect

17.1.1 Preparing the intake

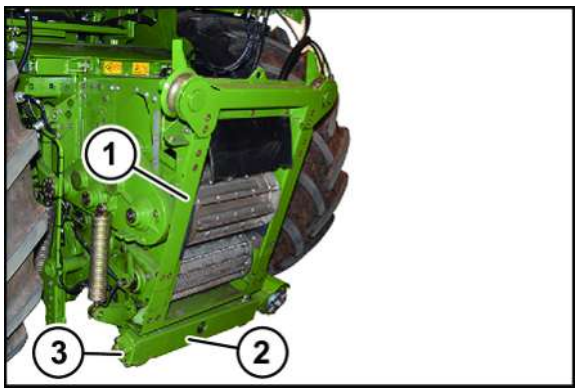

BX001-522

To prepare the forage harvester for attachment of the header:

- Lower the intake (1) of the forage harvester all the way.
- Align the pendulum tube (2) horizontally on the intake.

Version with "Mechanical header locking with universal shaft":

- Remove the locking pins (3).

Prepare quick-coupler (for "Hydraulic comfortable header locking with quick-coupler" version)

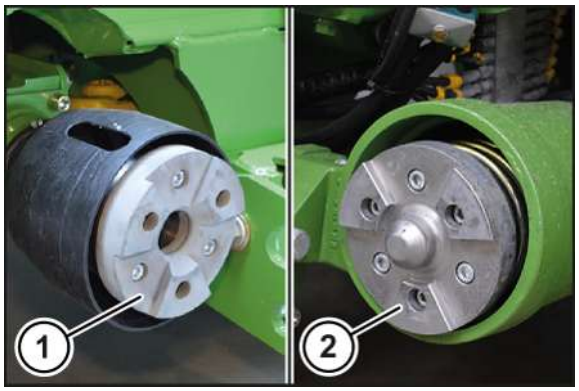

BX001-693

To prepare the coupling for the attachment of the header:

- Clean the clutch disc (1) on the header.
- Clean the coupling journal (2) on the machine.

17.1.2 Connecting XCollect

For "Mechanical header locking with universal shaft" version

BX002-104

✓ The header has been prepared for attachment, see operating instructions for the header.

✓ The intake has been prepared for attachment, *refer to page 314*.

WARNING! Crush hazard due to moving machine parts! Ensure that there is nobody between the machine and the header.

▶ Drive the machine up to the header until the roll guides (1) are under the pendulum crossbar (2).

▶ Slowly raise the lifting unit and ensure that the pendulum crossbar (2) is correctly and completely supported by the roll guides (1).

During the lifting process the centring triangles (3) run into the locking sheets (4).

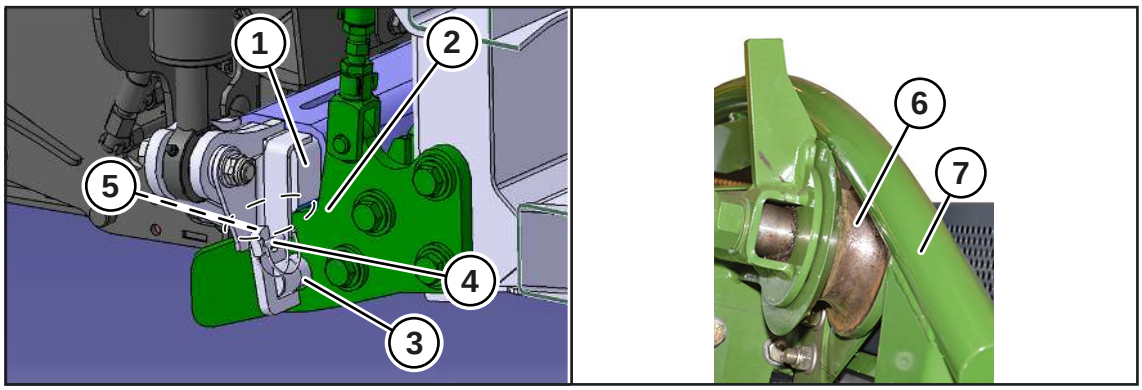

BX002-105

▶ Shut down and safeguard the machine, *refer to page 34*.

▶ Check whether the centring triangles (1) are on the contour (5) of the locking sheets (2) and whether the pendulum crossbar (7) is completely in the grooves of the roller guides (6).

▶ Fit the locking pins (3) and secure each one with a tube linchpin (4).

▶ Slide the universal shaft out of the holder on the forage harvester and onto the drive journal of the header until the slider pin engages.

▶ Secure the universal shaft guard on the forage harvester against turning with the supporting chain.

For "Hydraulic comfortable header locking with quick-coupler" version

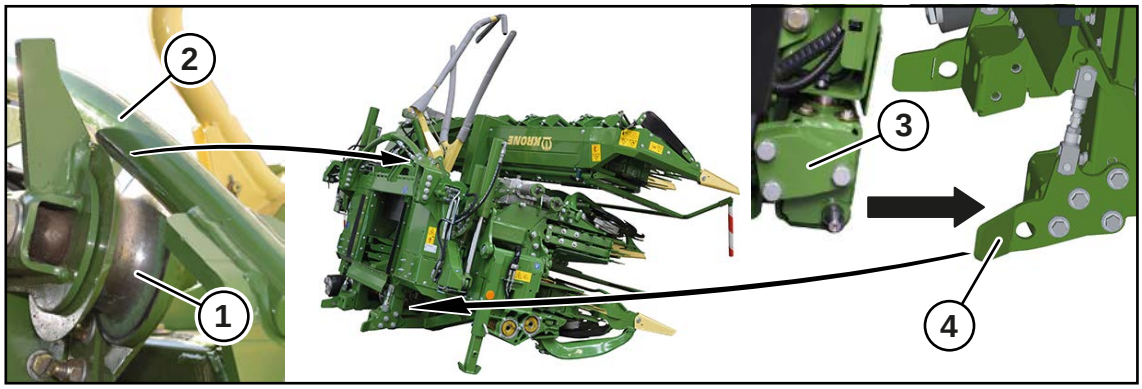

BX002-104

✓ The header has been prepared for attachment, see operating instructions for the header.
✓ The intake has been prepared for attachment, *refer to page 314*.

Crush hazard due to moving machine parts! Ensure that there is nobody between the machine and the header.

▶ Drive the machine up to the header until the roll guides (1) are under the pendulum crossbar (2).

▶ Unlock the header locking via the additional keypad, *refer to page 103*.

▶ Slowly raise the lifting unit and ensure that the pendulum crossbar (2) is correctly and completely supported by the roll guides (1).

During the lifting process the centring triangles (3) run into the locking sheets (4).

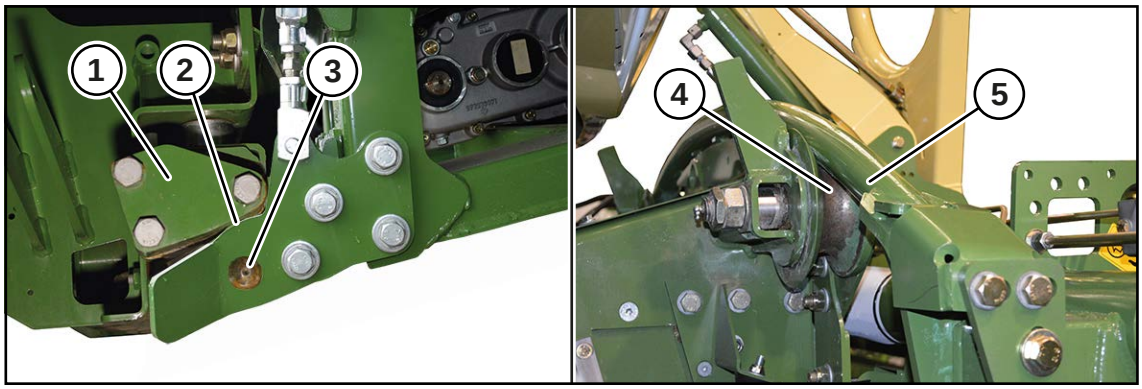

BX002-106

▶ Release the "Open header locking" key.

⇨ Lock the locking pins (3).

▶ Shut down and safeguard the machine, *refer to page 34*.

▶ Check whether the centring triangles (1) are positioned on the locking sheets (2), the locking pin (3) is locked and the roll guides (4) are positioned on the pendulum crossbar (5).

If not:

▶ The locking sheets of the header must be set, see operating instructions for the header – initial start-up "Setting locking sheets".

▶ Note the setting of the clutch disc on the header, see operating instructions for the header – initial start-up "Aligning clutch disc".

17.1.3 Connecting hydraulic hoses

⚠ WARNING

Risk of injury from unexpected movements of the header

If the hydraulic hoses are interchanged when connecting them, the header will not function correctly.

- ▶ Identify hydraulic connections (hose markings).
- ▶ Check that the hose connections are fitted correctly.

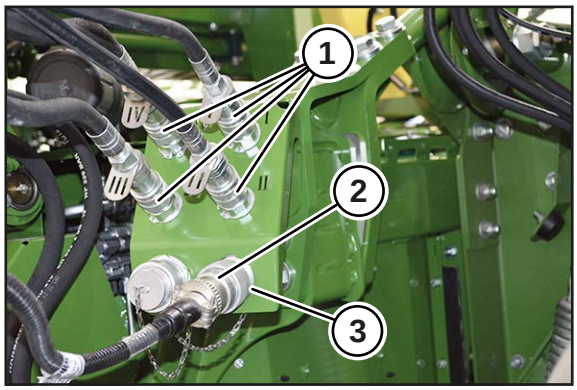

BX002-108

- ▶ Connect the hydraulic hoses (1) to the corresponding plug-in connections on the XCollect. Connect the hydraulic hose I to the plug-in connector I, etc.
- ▶ Establish the plug connection (2) for the lighting and the sensors with the socket (3) on the maize header.

INFORMATION

The identification of plug-in connectors (I – IV) on the machine can also be found on the hydraulic hoses of forage harvester.

17.1.4 Moving support jacks on right/left into transport position

Rear support jacks on the right/left:

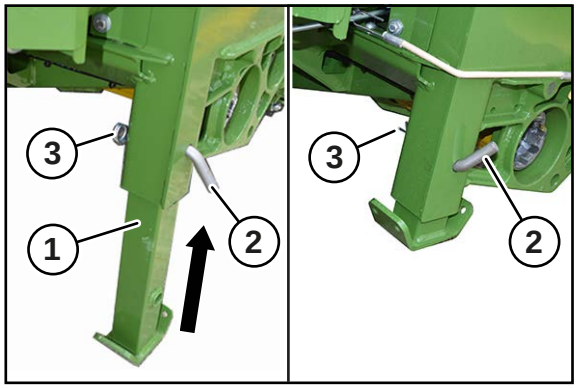

BX002-109

- ▶ Remove the spring cotter pin (3) and pull out the bolt (2).
- ▶ Push in the support jack (1) and secure with the bolt (2) and the spring cotter pin (3).

17.2 Removing XCollect

⚠ WARNING

Risk of injury from movement of the header

If people are in the area of the header when it is being raised or lowered and folded in or out, there is a risk that these people may be caught and injured by the header or the lifting unit.

- When the header is moving, ensure that there is nobody in the area of the header or the lifting unit.

Moving parking jacks at rear right/left into support position

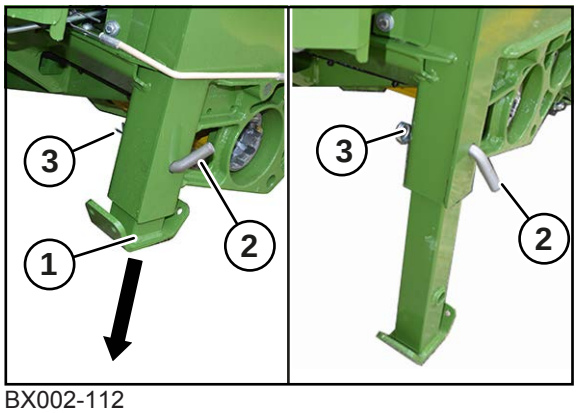

BX002-112

- Remove the spring cotter pin (3) and pull out the bolt (2).
- Push in the support jack (1) and secure with the bolt (2) and the spring cotter pin (3).

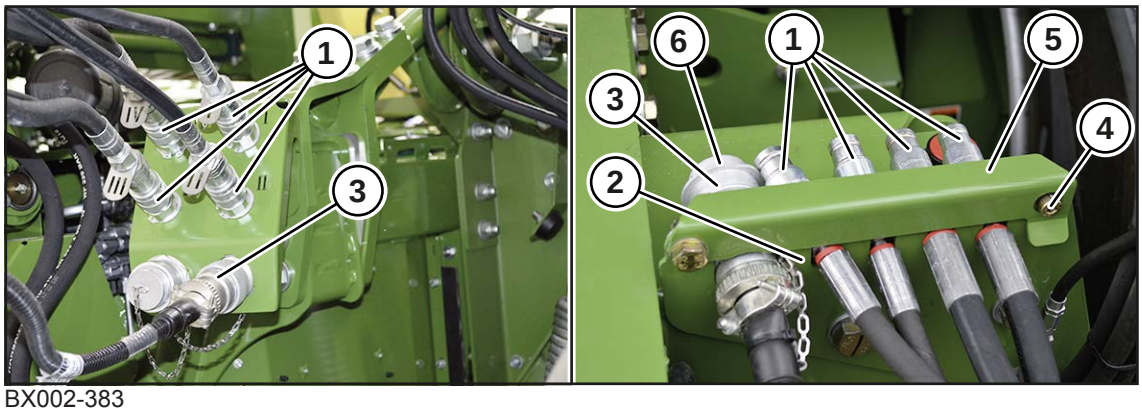

BX002-383

- ✓ The maize header has been folded in.
- ✓ The lifting unit has been completely raised.
- ✓ The machine has been shut down and secured, *refer to page 34*
- Lower the lifting unit completely onto the ground.
- Loosen the screw (4) and open the lock (5) of the hose support.
- Disconnect the hydraulic hoses (1) from the plug-in connectors and place in the hose support (2) on the intake of the forage harvester.
- Disconnect the plug connection (3) and place with attached protective cap (6) in the hose support (2).
- Close the lock (5) of the hose support and tighten the screw (4).

Disconnecting header

For "Mechanical header locking with universal shaft" version

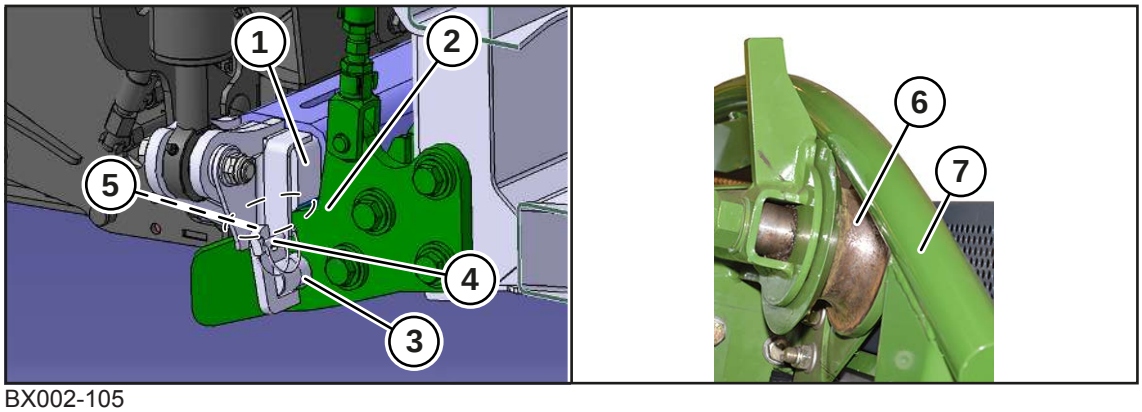

BX002-105

- Dismount the tube linchpins (4) and the locking pins (3).
- Dismount and deposit the universal shaft.
- Start the diesel engine.
- Lower the lifting unit of the forage harvester until the roll guides (6) are not in contact with the pendulum crossbar (7).
- Move the forage harvester back.

For version with "Hydraulic comfort header locking with quick coupler"

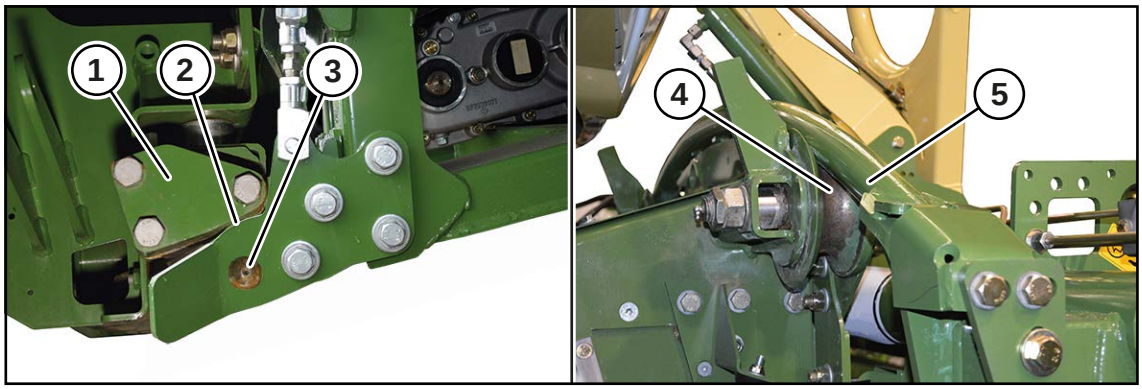

BX002-106

- Start the diesel engine.
- Unlock the locking pin (3) via the additional keypad.
- Lower the lifting unit of the forage harvester until the roll guides (4) are not in contact with the pendulum crossbar (5).
- Move the forage harvester back.

17.3 Parking XCollect

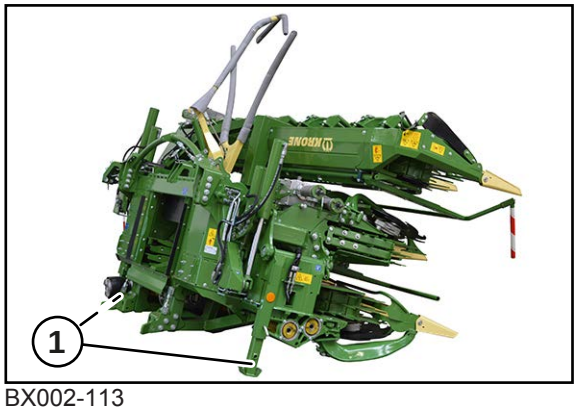

BX002-113

- Park the maize header, with support jacks extended at the rear (1), in a dry and clean place and on a solid and level surface.

18 Start-up – Attaching and removing EasyCollect

⚠ WARNING

Risk of injury due to non-observance of relevant safety notices

If the relevant safety notices are not observed, persons may get seriously injured or killed.

- To avoid accidents, the basic safety instructions must be read and observed, *refer to page 19*.

⚠ WARNING

Risk of injury due to non-observance of safety instructions

If the relevant safety routines are not observed, persons may be seriously injured or killed.

- The safety routines must be read and observed to avoid accidents, *refer to page 34*.

⚠ WARNING

Risk of injury due to unexpected movement of the header and moving components!

There is an increased risk of injury when mounting and dismounting headers to or from the machine.

- Switch off the forage harvester engine, remove the ignition key and take it with you.
- Secure machine by means of wheel chocks against rolling away.
- Wait until all machine parts have come to a complete stop.
- Make sure that there is no one between forage harvester and header.
- Ensure that nobody reaches into the clearance between the header and machine.
- Before working under or on the raised header, support the header securely.
- There must be nobody in the swivel range while the header is being swivelled from the transport into the working position and vice versa.

NOTICE

Damage to the machine by turning the quick connector without attached header

If the quick connector is driven without the header attached, the machine may be damaged, as the clutch disc of the quick connector is not controlled.

- Ensure that the quick connector is not driven unless a header has been attached.
- If the intake is to be run without a header for maintenance purposes, remove the universal shaft from the forage harvester beforehand.

Only those headers may be attached which have been type tested by the manufacturer and approved for use, *refer to page 75*.

When operating the forage harvester with a header, read and follow the operating instructions supplied with the header before using it.

Prerequisites for attaching and removing a header:

- ✓ The machine has been safely parked, *refer to page 27*.
- ✓ There must be adequate room to manoeuvre the forage harvester.
- ✓ All prerequisites for grass mode / operation with the direct cut header *refer to page 232* or maize mode *refer to page 255* are met.

18.1 Mounting EasyCollect

18.1.1 Preparing the intake

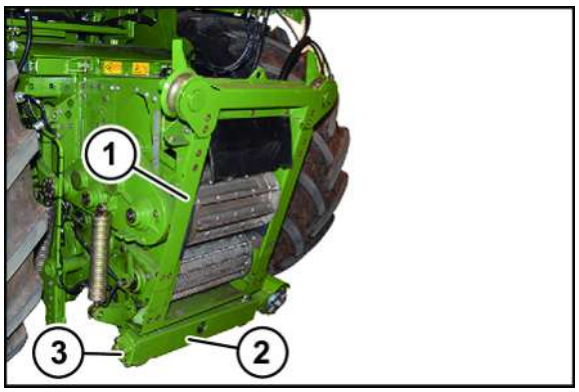

BX001-522

To prepare the forage harvester for attachment of the header:

- Lower the intake (1) of the forage harvester all the way.
- Align the pendulum tube (2) horizontally on the intake.

Version with "Mechanical header locking with universal shaft":

- Remove the locking pins (3).

Prepare quick-coupler (for "Hydraulic comfortable header locking with quick-coupler" version)

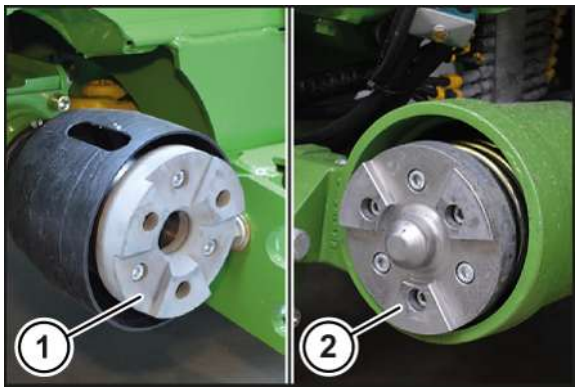

BX001-693

To prepare the coupling for the attachment of the header:

- Clean the clutch disc (1) on the header.
- Clean the coupling journal (2) on the machine.

18.1.2 Connecting EasyCollect

For "Mechanical header locking with universal shaft" version

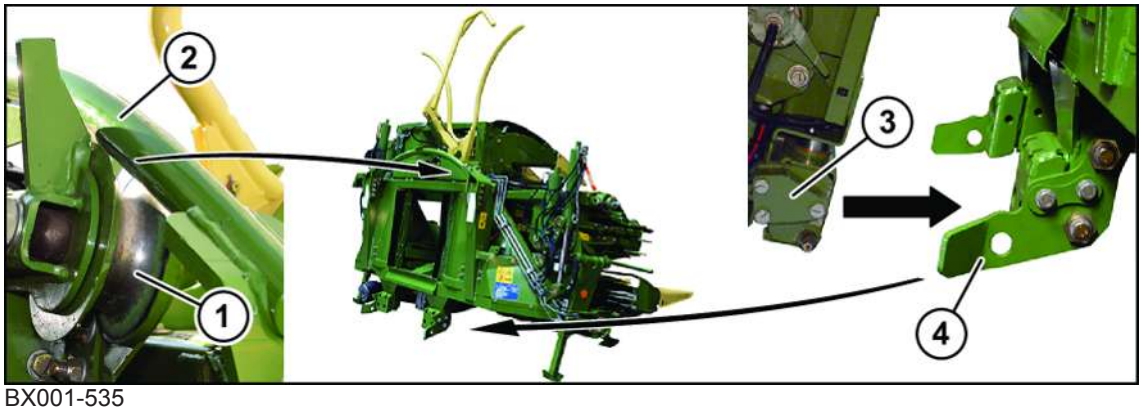

BX001-535

✓ The header has been prepared for attachment, see operating instructions for the header.
✓ The intake has been prepared for attachment, *refer to page 322* .

WARNING! Crush hazard due to moving machine parts! Ensure that there is nobody between the machine and the header.

▶ Drive the machine up to the header until the roll guides (1) are under the pendulum crossbar (2).

▶ Slowly raise the lifting unit and ensure that the pendulum crossbar (2) is correctly and completely supported by the roll guides (1).

During the lifting process the centring triangles (3) run into the locking sheets (4).

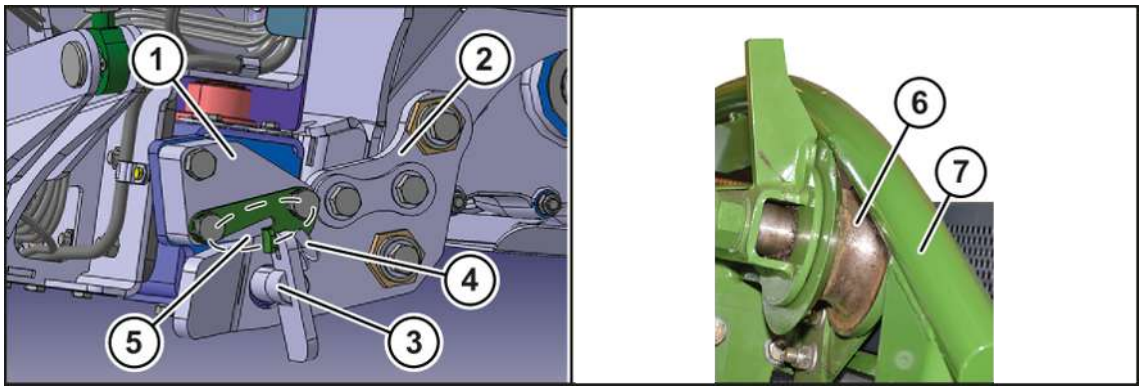

BX001-673

▶ Shut down and safeguard the machine, *refer to page 34*.

▶ Check whether the centring triangles (1) are on the contour (5) of the locking sheets (2) and whether the pendulum crossbar (7) is completely in the grooves of the roller guides (6).

▶ Fit the locking pins (3) and secure each one with a tube linchpin (4).

▶ Slide the universal shaft out of the holder on the forage harvester and onto the drive journal of the header until the slider pin engages.

▶ Secure the universal shaft guard on the forage harvester against turning with the supporting chain.

For "Hydraulic comfortable header locking with quick-coupler" version

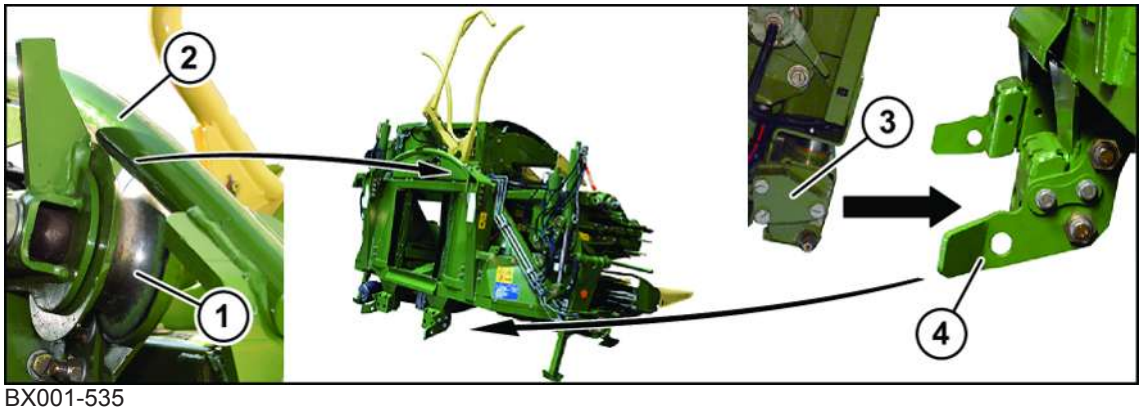

BX001-535

✓ The header has been prepared for attachment, see operating instructions for the header.
✓ The intake has been prepared for attachment, *refer to page 322*.

Crush hazard due to moving machine parts! Ensure that there is nobody between the machine and the header.

▶ Drive the machine up to the header until the roll guides (1) are under the pendulum crossbar (2).

▶ Unlock the header locking via the additional keypad, *refer to page 103*.

▶ Slowly raise the lifting unit and ensure that the pendulum crossbar (2) is correctly and completely supported by the roll guides (1).

During the lifting process the centring triangles (3) run into the locking sheets (4).

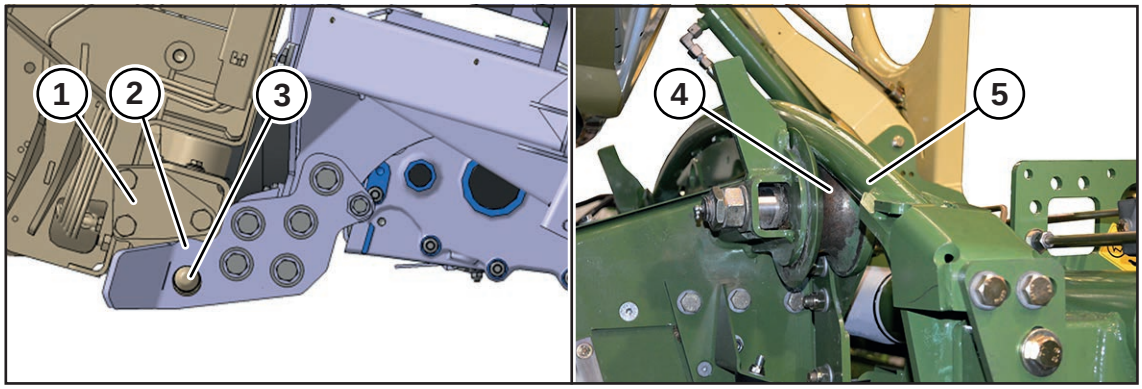

BX001-536

▶ Release the "Open header locking" key.

⇨ Lock the locking pins (3).

▶ Shut down and safeguard the machine, *refer to page 34*.

▶ Check whether the centring triangles (1) are positioned on the locking sheets (2), the locking pin (3) is locked and the roll guides (4) are positioned on the pendulum crossbar (5).

If not:

▶ The locking sheets of the header must be set, see operating instructions for the header – initial start-up "Setting locking sheets".

▶ Note the setting of the clutch disc on the header, see operating instructions for the header – initial start-up "Aligning clutch disc".

18.1.3 Connecting hydraulic hoses

⚠ *WARNING*

Risk of injury from unexpected movements of the header

If the hydraulic hoses are interchanged when connecting them, the header will not function correctly.

- ▶ Identify hydraulic connections (hose markings).
- ▶ Check that the hose connections are fitted correctly.

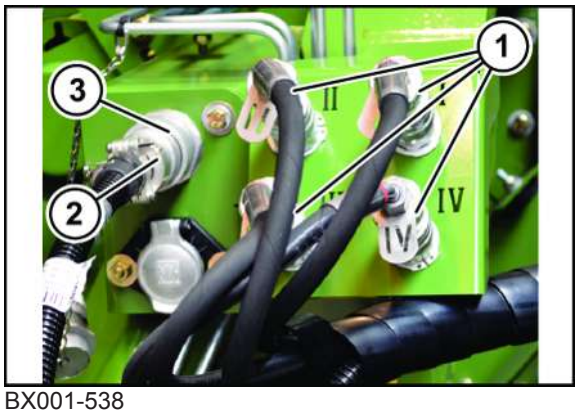

BX001-538

- ▶ Connect the hydraulic hoses (1) to the corresponding plug-in connections on the EasyCollect. Connect the hydraulic hose I to the plug-in connector I, etc.
- ▶ Establish the plug connection (2) for the lighting and the sensors with the socket (3) on the maize header.

INFORMATION

The identification of plug-in connectors (I – IV) on the machine can also be found on the hydraulic hoses of forage harvester.

18.1.4 Moving parking jacks on right/left into transport position

EasyCollect 450-2, 600-2, 750-2

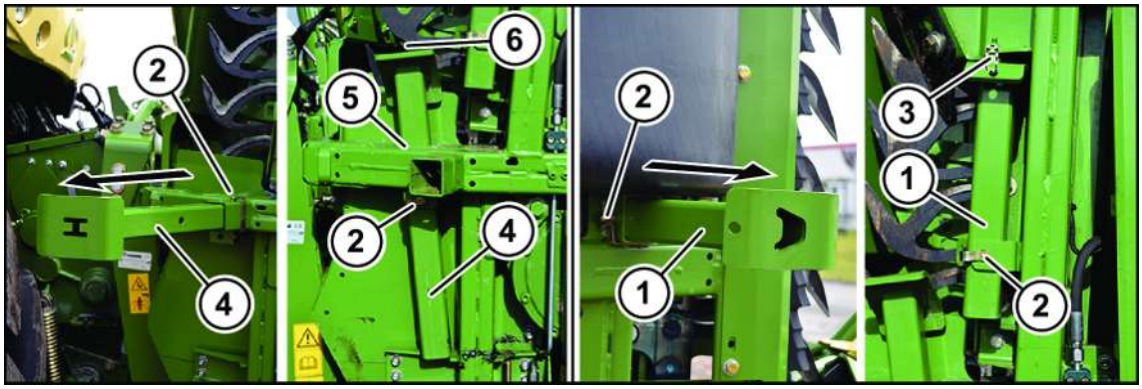

BX001-736

Rear support jacks on the right/left

- Remove the spring locking pins (2) and pull the rear support jacks (4) out of the guidance.
- Push the rear support jacks (4) into the holders (5) of the lateral frames in such a way that no plant remnants can collect in the area (6) above the support jacks.
- Secure the position of the rear support jacks (4) with the spring locking pins (2).

Front support jacks on the right/left

- Remove the spring locking pins (2) and pull the front support jacks (1) out of the guidance.
- Push the foot of the front support jacks onto the guide pins (3) in the holders on the lateral frames.
- Secure the position of the front support jacks (1) with the spring locking pins (2).

EasyCollect 600-3, 750-3, 900-3

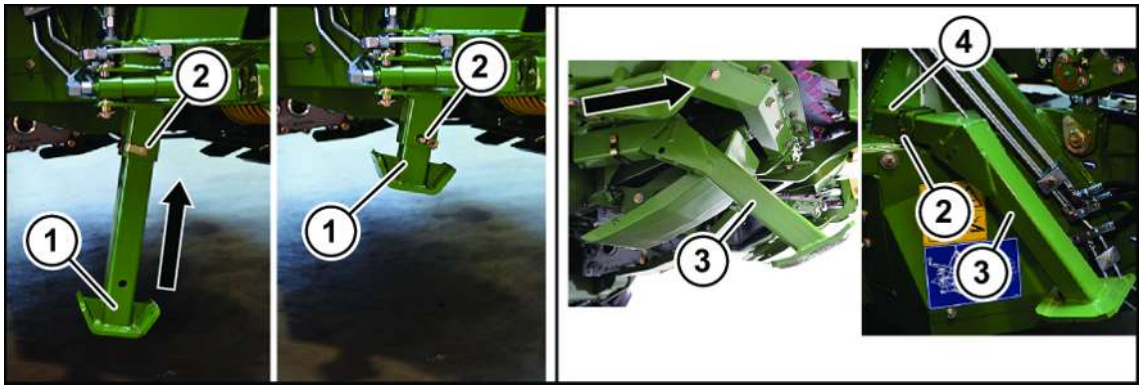

BX001-738

Rear support jacks on right/left

- Remove the spring locking pins (2) and push in the rear support jacks (1).
- Secure the position of the rear support jacks (1) with the spring locking pins (2).

Front support jacks on right/left

- Remove the spring locking pins (2) and pull the front support jacks (3) out of the insert pockets.
- Insert the front support jacks (3) into the insert pockets (4) on the main frame.
- Secure the position of the front support jacks (1) with the spring locking pins (2).

18.2 Removing EasyCollect

⚠ *WARNING*

Risk of injury from movement of the header

If people are in the area of the header when it is being raised or lowered and folded in or out, there is a risk that these people may be caught and injured by the header or the lifting unit.

- When the header is moving, ensure that there is nobody in the area of the header or the lifting unit.

Moving parking jacks on right/left into support position

EasyCollect 450-2, 600-2, 750-2

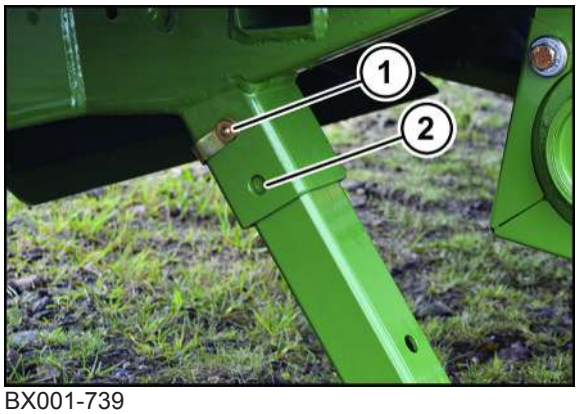

BX001-739

To ensure that the forage harvester can accommodate the maize header, the height of the roller guides on the forage harvester must be matched to the height of the pendulum crossbar on the maize header. For this purpose, the rear support jacks must be differently aligned depending on the tyre diameter.

- If the front axle tyres on the forage harvester are 34 inches or less, insert the spring locking pin into the upper hole pattern (1).
- If the front axle tyres on the forage harvester are 38 inches or more, insert the spring locking pin into the upper hole pattern (2).

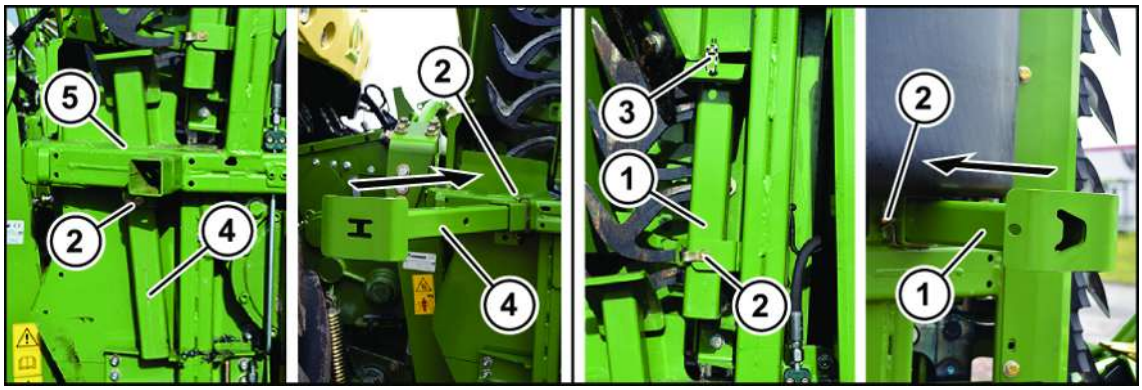

BX001-735

Rear support jacks on the right/left

- ▶ Remove the spring locking pins (2) and pull the rear support jacks (4) out of the holders (5) on the lateral frame.
- ▶ Push the rear support jacks (4) into the rear guidances on the lateral frames.
- ▶ Secure the position of the rear support jacks (4) with the spring locking pins (2).

Front support jacks on the right/left

- ▶ Remove the spring locking pins (2) and pull the front support jacks (1) from the guide pins (3) and take out of the holders on the lateral frames.
- ▶ Push the front support jacks (1) into the front guidances on the lateral frames.
- ▶ Secure the position of the front support jacks (1) with the spring locking pins (2).

EasyCollect 600-3, 750-3, 900-3

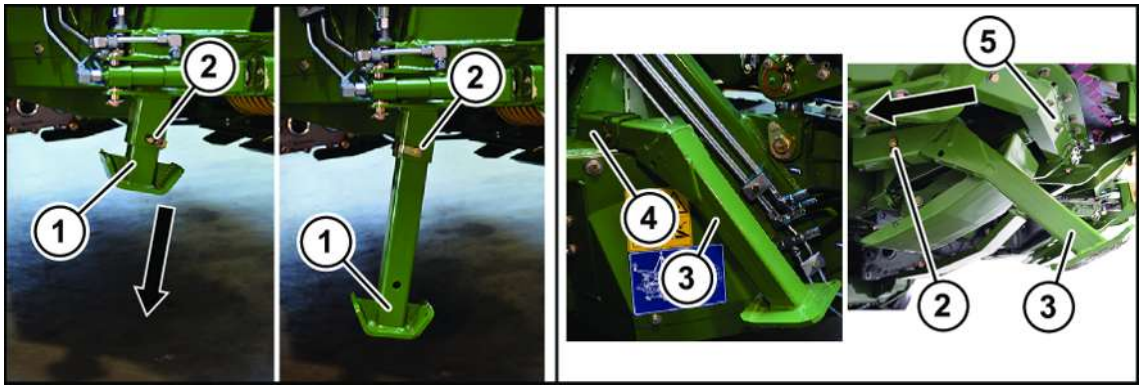

BX001-737

Rear support jacks on the right/left

- ▶ Remove the spring locking pins (2) and pull out the rear support jacks (1) .
- ▶ Secure the position of the rear support jacks (1) with the spring locking pins.

Front support jacks on the right/left

- ▶ Remove the front support jacks (3) from the insert pockets (4) and place them in the front holders.
- ▶ Secure the position of the front support jacks (3) with the spring locking pins (2).

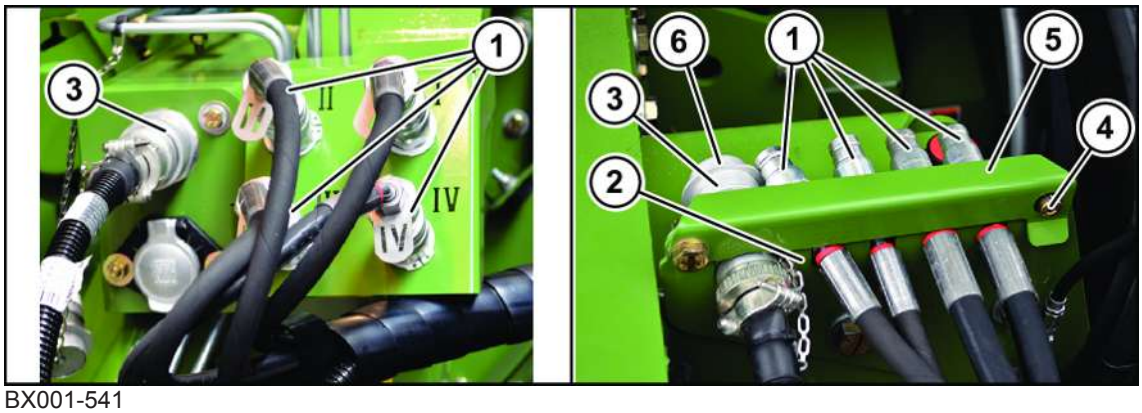

BX001-541

- ✓ The maize header has been folded in.
- ✓ The lifting unit has been completely raised.
- ✓ The machine has been shut down and secured, *refer to page 34*
- ▶ Fold out the maize header (only EasyCollect 450-2, 600-2, 750-2).
- ▶ Lower the lifting unit completely onto the ground.
- ▶ Loosen the screw (4) and open the lock (5) of the hose support.
- ▶ Disconnect the hydraulic hoses (1) from the plug-in connectors and place in the hose support (2) on the intake of the forage harvester.
- ▶ Disconnect the plug connection (3) and place with attached protective cap (6) in the hose support (2).
- ▶ Close the lock (5) of the hose support and tighten the screw (4).

For "Mechanical header locking with universal shaft" version

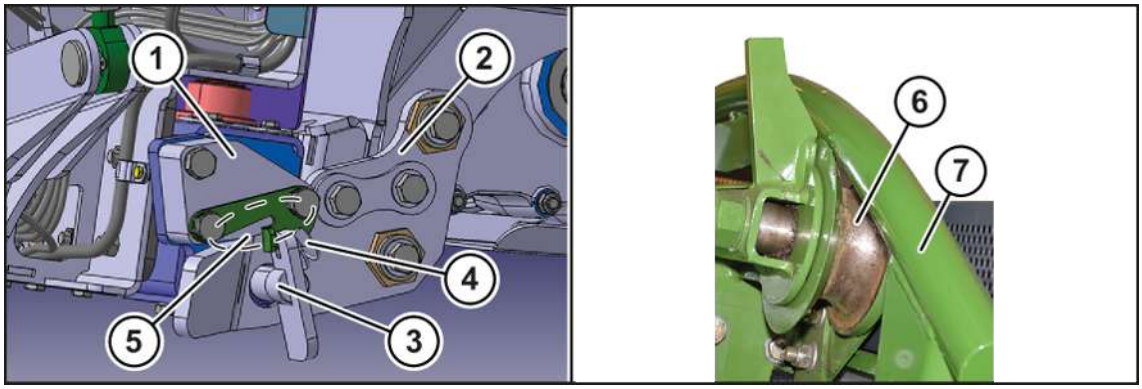

BX001-673

- Remove the tube linchpins (4) and the locking pins (3).
- Start the diesel engine.
- Lower the lifting unit of the forage harvester until the roll guides (6) are not in contact with the pendulum crossbar (7).
- Move the forage harvester back.

Version with "Hydraulic comfortable header locking with quick-coupler"

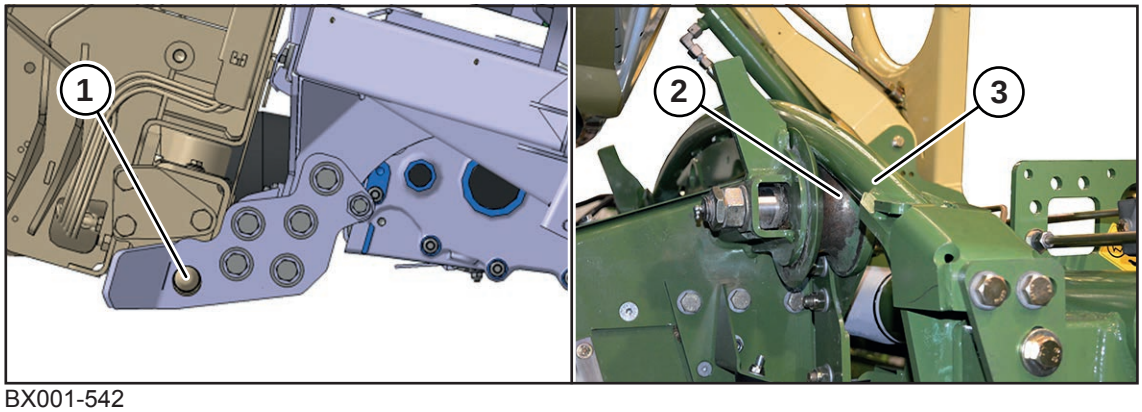

BX001-542

- Start the diesel engine.
- Unlock the locking pin (1) via the additional keypad.
- Lower the lifting unit of the forage harvester until the roll guides (2) are not in contact with the pendulum crossbar (3).
- Move the forage harvester back.

18.3 Putting down EasyCollect

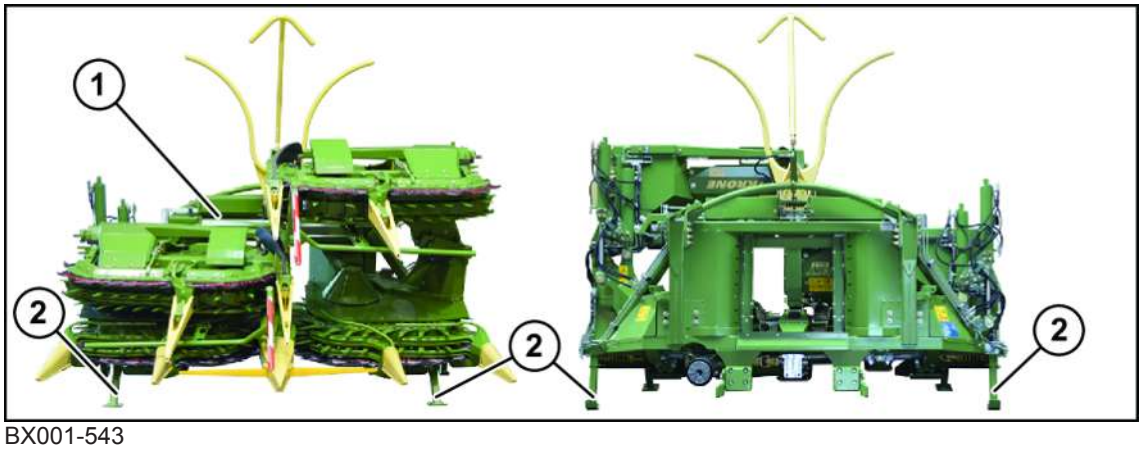

BX001-543

Set the EasyCollect (1) down, with support jacks (2) extended, on a solid and level surface and in a dry and clean place.

- To bring the support jacks into working position: See the operating instructions for the header, chapter Operation – Dismantling the machine "Bring right/left support jacks into support position".
- Park the machine safely, *refer to page 27*.

19 Start-up – Attaching and removing XDisc

⚠ WARNING

Risk of injury due to non-observance of relevant safety notices

If the relevant safety notices are not observed, persons may get seriously injured or killed.

- To avoid accidents, the basic safety instructions must be read and observed, *refer to page 19*.

⚠ WARNING

Risk of injury due to non-observance of safety instructions

If the relevant safety routines are not observed, persons may be seriously injured or killed.

- The safety routines must be read and observed to avoid accidents, *refer to page 34*.

⚠ WARNING

Risk of injury due to unexpected movement of the header and moving components!

There is an increased risk of injury when mounting and dismounting headers to or from the machine.

- Switch off the forage harvester engine, remove the ignition key and take it with you.
- Secure machine by means of wheel chocks against rolling away.
- Wait until all machine parts have come to a complete stop.
- Make sure that there is no one between forage harvester and header.
- Ensure that nobody reaches into the clearance between the header and machine.
- Before working under or on the raised header, support the header securely.
- There must be nobody in the swivel range while the header is being swivelled from the transport into the working position and vice versa.

NOTICE

Damage to the machine by turning the quick connector without attached header

If the quick connector is driven without the header attached, the machine may be damaged, as the clutch disc of the quick connector is not controlled.

- Ensure that the quick connector is not driven unless a header has been attached.
- If the intake is to be run without a header for maintenance purposes, remove the universal shaft from the forage harvester beforehand.

Only those headers may be attached which have been type tested by the manufacturer and approved for use, *refer to page 75*.

When operating the forage harvester with a header, read and follow the operating instructions supplied with the header before using it.

Prerequisites for attaching and removing a header:

- ✓ The machine has been safely parked, *refer to page 27*.
- ✓ There must be adequate room to manoeuvre the forage harvester.
- ✓ All prerequisites for grass mode / operation with the direct cut header *refer to page 232* or maize mode *refer to page 255* are met.

19.1 Mounting XDisc

19.1.1 Preparing the intake

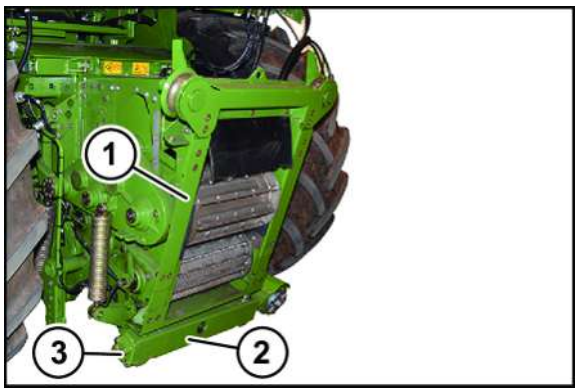

BX001-522

To prepare the forage harvester for attachment of the header:

- Lower the intake (1) of the forage harvester all the way.
- Align the pendulum tube (2) horizontally on the intake.

Version with "Mechanical header locking with universal shaft":

- Remove the locking pins (3).

Prepare quick-coupler (for "Hydraulic comfortable header locking with quick-coupler" version)

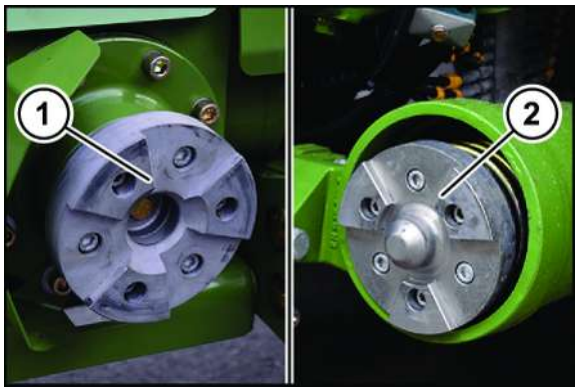

BX001-648

To prepare the coupling for the attachment of the header:

- Clean the clutch disc (1) on the header.
- Clean the coupling journal (2) on the machine.

19.1.2 Connecting XDisc

For "Mechanical header locking with universal shaft" version

INFORMATION

To ensure that the XDisc can be connected to a forage harvester without a quick coupler, the retrofit kit "mechanical universal shaft coupling" (20 295 134 0) is required.

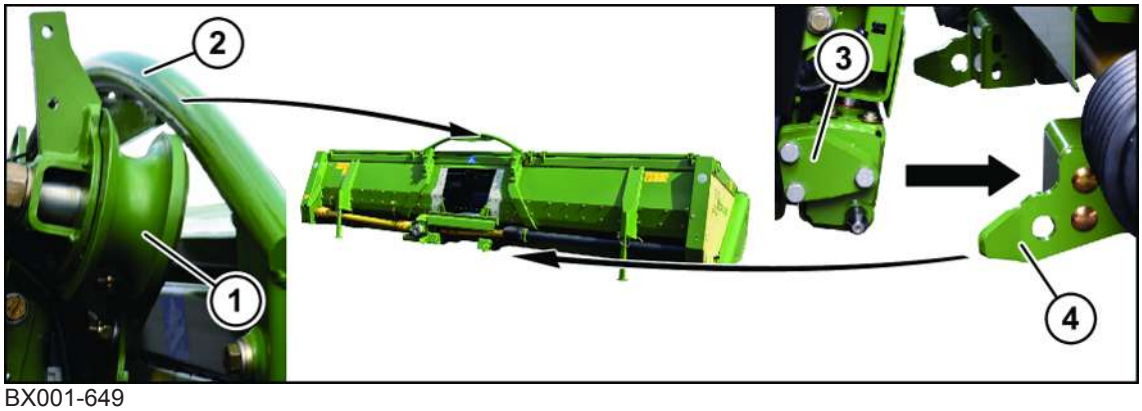

BX001-649

✓ The header has been prepared for attachment, see operating instructions for the header.
✓ The intake has been prepared for attachment, *refer to page 332*.

WARNING! Crush hazard due to moving machine parts! Ensure that there is nobody between the machine and the header.

▶ Drive the machine up to the header until the roll guides (1) are under the pendulum crossbar (2).

▶ Slowly raise the lifting unit and ensure that the pendulum crossbar (2) is correctly and completely supported by the roll guides (1).

During the lifting process the centring triangles (3) run into the locking sheets (4).

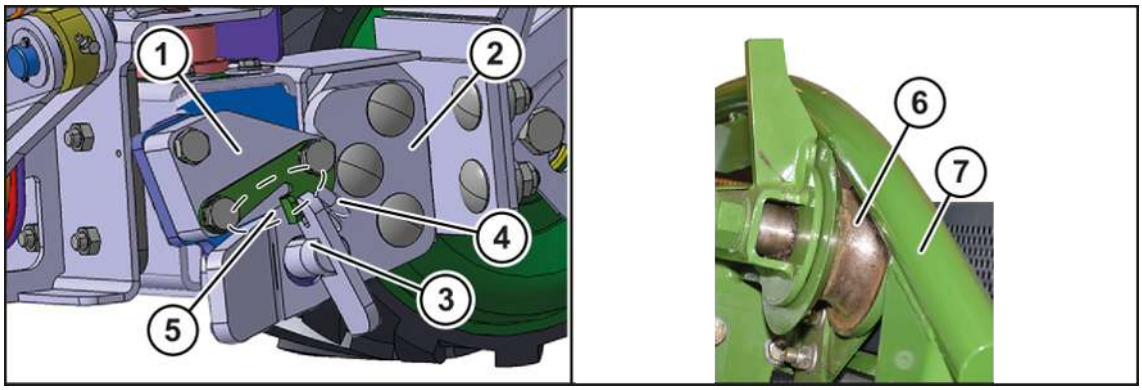

BX001-862

▶ Shut down and safeguard the machine, *refer to page 34*.

▶ Check whether the centring triangles (1) are on the contour (5) of the locking sheets (2) and whether the pendulum crossbar (7) is completely in the grooves of the roller guides (6).

▶ Fit the locking pins (3) and secure each one with a tube linchpin (4).

▶ Slide the universal shaft out of the holder on the forage harvester and onto the drive journal of the header until the slider pin engages.

▶ Secure the universal shaft guard on the forage harvester against turning with the supporting chain.

For "Hydraulic comfortable header locking with quick-coupler" version

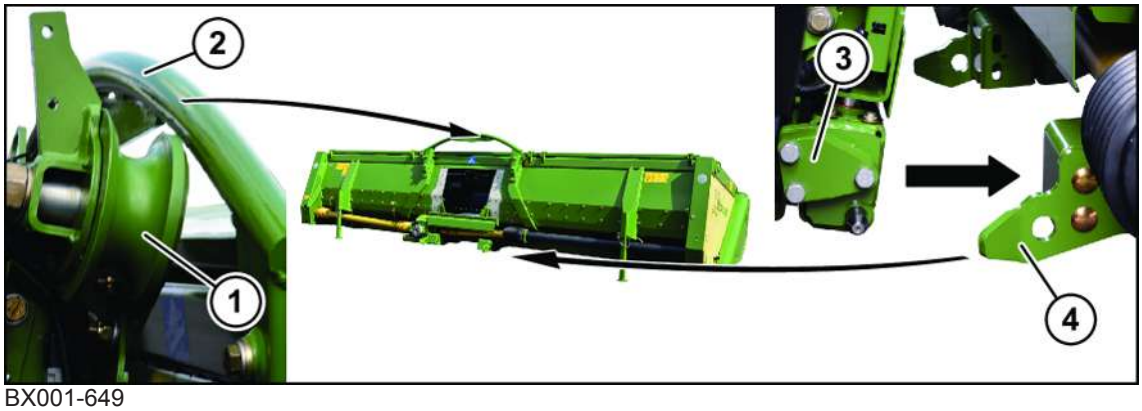

BX001-649

✓ The header has been prepared for attachment, see operating instructions for the header.
✓ The intake has been prepared for attachment, *refer to page 332*.

Crush hazard due to moving machine parts! Ensure that there is nobody between the machine and the header.

▶ Drive the machine up to the header until the roll guides (1) are under the pendulum crossbar (2).

▶ Unlock the header locking via the additional keypad, *refer to page 103*.

▶ Slowly raise the lifting unit and ensure that the pendulum crossbar (2) is correctly and completely supported by the roll guides (1).

During the lifting process the centring triangles (3) run into the locking sheets (4).

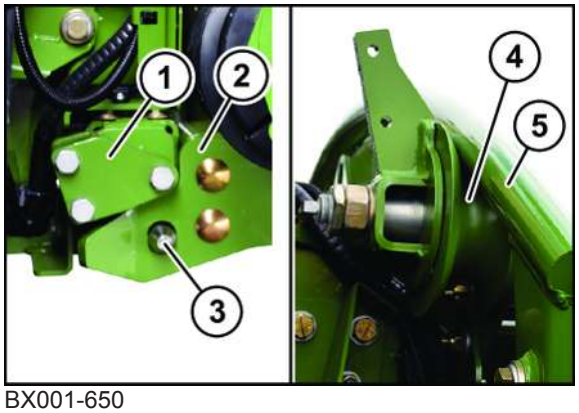

BX001-650

▶ Release the "Open header locking" key.

⇨ Lock the locking pins (3).

▶ Shut down and safeguard the machine, *refer to page 34*.

▶ Check whether the centring triangles (1) are positioned on the locking sheets (2), the locking pin (3) is locked and the roll guides (4) are positioned on the pendulum crossbar (5).

If not:

▶ The locking sheets of the header must be set, see operating instructions for the header – initial start-up "Setting locking sheets".

▶ Note the setting of the clutch disc on the header, see operating instructions for the header – initial start-up "Aligning clutch disc".

19.1.3 Moving parking jacks on right/left into transport position

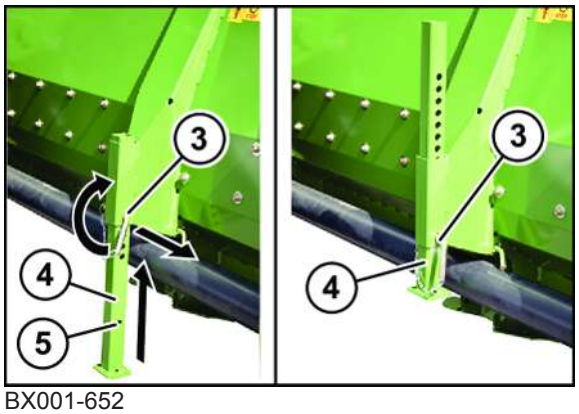

BX001-652

- ▶ On both sides pull out the socket pin (3) of the parking jacks (4).
- ▶ Push the parking jacks (4) upwards and secure them in the borehole (5) with the socket pin (3).

19.2 Removing XDisc

⚠ *WARNING*

Risk of injury from movement of the header

If people are in the area of the header when it is being raised or lowered and folded in or out, there is a risk that these people may be caught and injured by the header or the lifting unit.

- ▶ When the header is moving, ensure that there is nobody in the area of the header or the lifting unit.

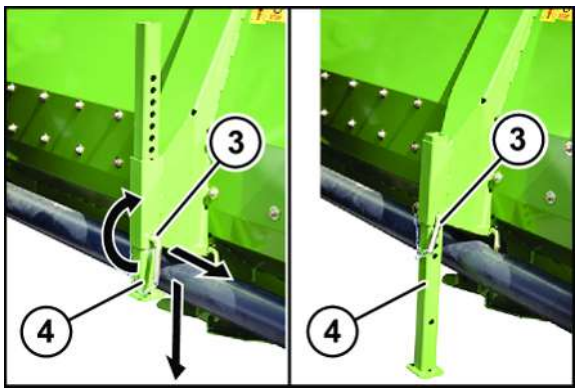

BX001-653

- ✓ The lifting unit is in the top position.
- ✓ The machine has been shut down and secured, *refer to page 34*.
- ▶ On both sides pull out the socket pin (3) of the parking jacks (4).
- ▶ Pull out the parking jacks (4) and secure with the socket pins (3) in one of the boreholes so that the XDisc can be set down.

For "Mechanical header locking with universal shaft" version

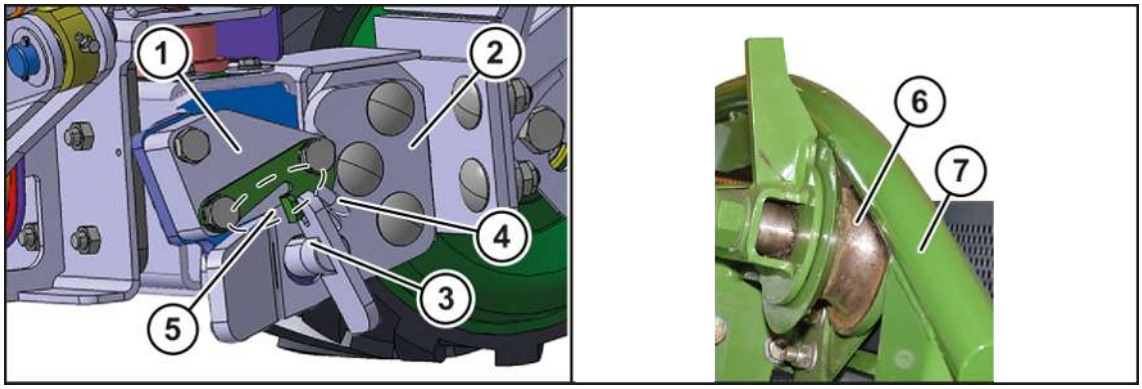

BX001-862

- Press the slider pin of the universal shaft and remove the universal shaft from the drive journal of the header.
- Place the universal shaft in the support/holder on the forage harvester.
- Dismount the tube linchpins (4) and the locking pins (3).
- Start the diesel engine.
- Lower the lifting unit of the forage harvester until the roll guides (6) are not in contact with the pendulum crossbar (7).
- Move the forage harvester back.

For version with “Hydraulic comfort header locking with quick coupler”

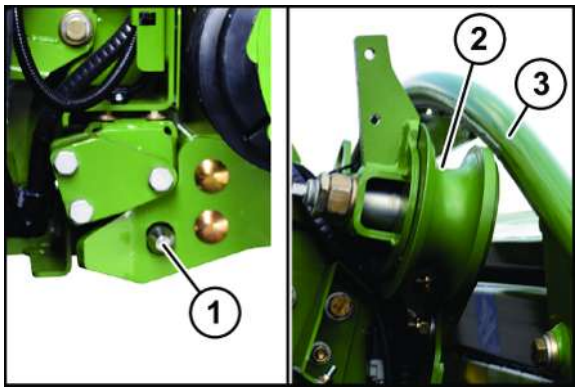

BX001-654

- Start diesel engine.
- Unlock the locking pin (1) via additional keypad.
- Lower the lifting unit of the forage harvester so that the roll guides (2) cannot collide with the mounting chute (3).
- Move the forage harvester back.

19.3 Putting down XDisc

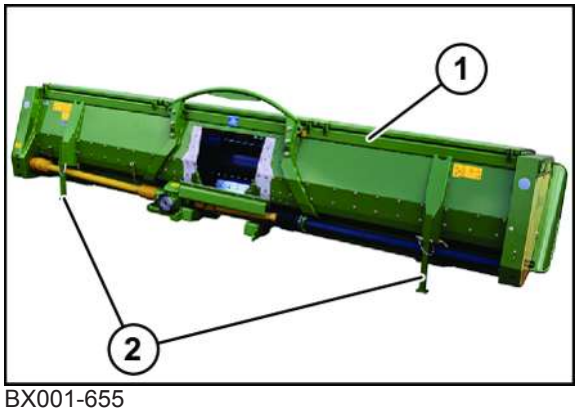

BX001-655

- With the support jacks (2) extended and secured, set the XDisc (1) down on solid and level ground and in a dry and clean place.
- To move the parking jacks into the working position, see the operating instructions for the header, chapter Operation – Dismantling the machine "Moving right/left parking jacks into working position".
- Set down the XDisc securely, *refer to page 27*.

If the XDisc is to be loaded onto the transport wagon:

- Load the XDisc onto the transport wagon, see operating instructions for the transport wagon.

20 Driving and Transport

⚠ WARNING

Risk of injury due to non-observance of relevant safety notices

If the relevant safety notices are not observed, persons may get seriously injured or killed.

- To avoid accidents, the basic safety instructions must be read and observed, *refer to page 19*.

⚠ WARNING

Risk of injury due to non-observance of safety instructions

If the relevant safety routines are not observed, persons may be seriously injured or killed.

- The safety routines must be read and observed to avoid accidents, *refer to page 34*.

⚠ WARNING

Risk of injury when driving on public highways

Due to the large dimensions of the machine, the unusual driving behaviour and the option of riding on the outside of the machine while it is being driven, the risk of accidents for machine personnel and third parties is increased.

- Swivel the header into the transport position.
- Swivel the spout into the transport position.
- When driving on public highways, observe the provisions of the Road Traffic Licensing Regulations (lighting, identification).
- Ensure that nobody is riding on the machine.
- Always adapt the driving speed of the machine on road and field to the given conditions.
- When driving down hills, on inclines or through obstacles, adjust driving behaviour to environmental conditions.
- Note that the machine swings out when cornering.

20.1 Preparing the machine for road travel

- ✓ The machine is shut down and safeguarded, *refer to page 34*.
- ✓ Soiling and crop residue have been removed from the machine, in particular from the lighting and identification elements.
- ✓ If a maize header is front-mounted: Mount the guards and the lighting on the header, see instructions for use for the header, and swivel the header with the lifting unit into the transport position, *refer to page 339* or set down the header on a transport wagon, hitch the transport wagon and swivel the intake into the transport position using the lifting unit, *refer to page 341*.
- ✓ If a grass header is front-mounted: Swivel the header into the transport position using the lifting unit, *refer to page 339*.
- ✓ If a direct cut header is front-mounted: Set down the direct cut header on the transport wagon, hitch the transport wagon and swivel the intake into the transport position using the lifting unit, *refer to page 341*.
- ✓ If no header is front-mounted: Swivel the intake into the transport position using the lifting unit, *refer to page 341*.
- ✓ Swivel spout into transport position, *refer to page 342*.

- ✓ Remove the wheel chocks from the wheels and place them in the supports, *refer to page 354*.
- ✓ The area around the machine must be inspected, *refer to page 91* and *refer to page 230*.
- ✓ No warning message is displayed on the terminal.
- ✓ The Main Mode Switch is in the "Road mode" position, *refer to page 101*.

20.1.1 Transport position

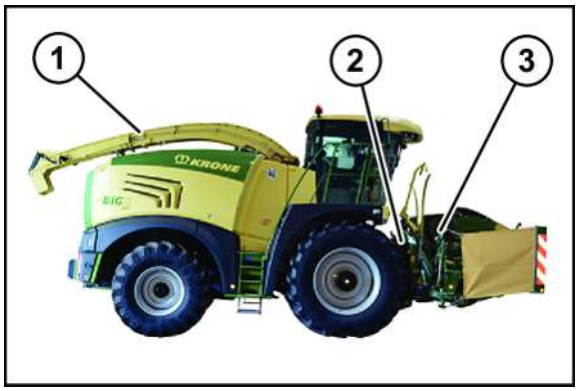

BXG000-069

For road travel, the spout (1) and the attached header (3) or the intake (2) (without an attached header) must be in transport position.

- ▶ Bring the header (3) into the transport position, *refer to page 339*.
- ▶ Bring the intake (2) into the transport position, *refer to page 341*.
- ▶ Bring the spout (1) into the transport position, *refer to page 342*.

20.1.2 Moving header to transport position

⚠ *WARNING*

Risk of injury from movement of the header

If people are in the area of the header when it is being raised or lowered and folded in or out, there is a risk that these people may be caught and injured by the header or the lifting unit.

- ▶ When the header is moving, ensure that there is nobody in the area of the header or the lifting unit.

- ✓ The driver's seat is occupied.
- ✓ The diesel engine has been started.
- ✓ The main mode switch is in the "field mode" position.
- ✓ There is adequate space for lifting and lowering.

Grass header

BX001-563

- Press the "Manually raise lifting unit" (1) key until the dimension X=400-450 mm (distance from the lower edge of the header (2) to the ground) has been reached.
- Move the crop press roller unit (3) into the lower position.
- Completely fold in the guide wheels (4).

When driving on roads, active vibration damping operates continuously which is also active if the operator button has not been pressed after the diesel engine has been switched on.

Maize header

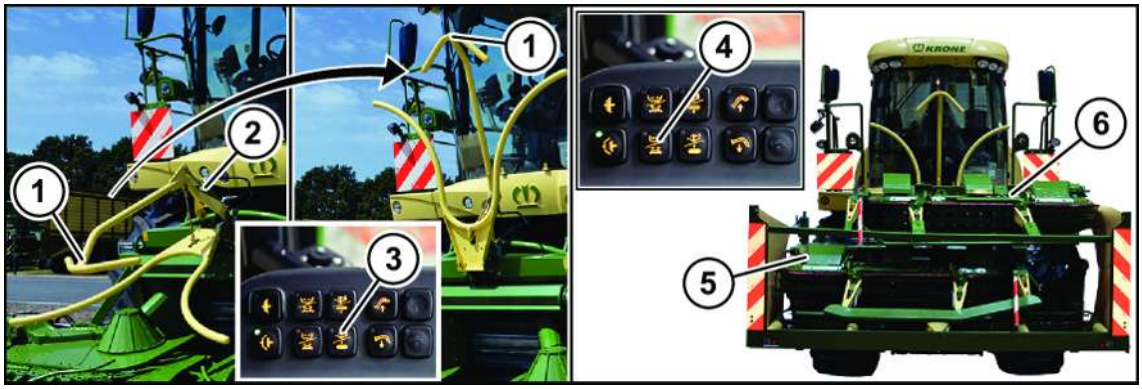

BX001-564

To ensure that the maize header can be folded in, the plant divider must be swivelled up and the pendulum tube horizontally aligned.

Swivelling up the plant divider (depending on the header used)

- Press the "Swivel up plant divider" key (3) on the keypad until the plant divider (1) has been completely swivelled up.

Folding in the maize header

The pendulum tube is automatically aligned horizontally when the "Fold in maize header" key is pressed.

- Hold down the "Fold in maize header" key (4) on the keypad until the side parts (5, 6) have been completely folded in.
- Attach the left and right guards and the front guard, see operating instructions for the header, chapter Operation, "From working position to transport position".

INFORMATION

If the pendulum tube is no longer horizontal during the folding-in process, an information message appears on the terminal and the folding-in process is interrupted.

To fold in the maize header when the pendulum tube is not horizontal:

▶ Press the "Fold in maize header" key on the keypad again and hold down.

⇨ The maize header folds in.

BX001-566

To raise the header (3):

▶ Press and hold down the "Manually raise lifting unit" key (1).

The header (3) is raised as long as the key is pressed.

When the maize header has been folded in, the lifting height is limited to 60% of the maximum lifting unit height.

To lower the header (3):

▶ Press and hold down the "Manually lower lifting unit" key (2) on the control lever.

The header (3) is lowered as long as the key is pressed.

When driving on roads, active vibration damping operates continuously which is also active if the operator button has not been pressed after the diesel engine has been switched on.

20.1.3 Moving intake into transport position

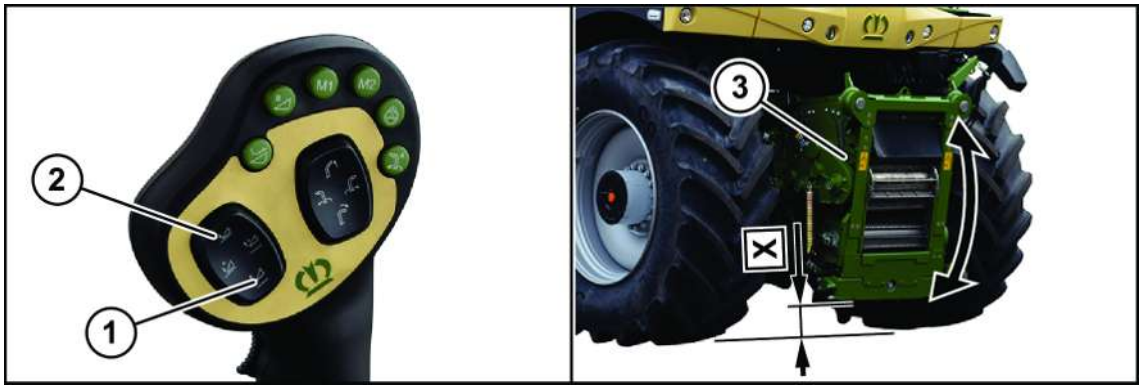

BX001-620

If the machine should be driven on roads without header, the lower edge of intake must be set to a height of **X = 400 mm ±100 mm**.

- ✓ The driver's seat is occupied.
- ✓ The diesel engine has been started.
- ✓ The main mode switch is in the “Field mode” position.
- ✓ There is adequate space for lifting and lowering.
- ✓ There is nobody in the area of the intake.
- ▶ Raise or lower the intake by using the “Manually raise lifting unit” and “Manually lower lifting unit” keys (1) until the dimension **X = 400 mm ±100 mm** from lower edge of intake to ground is reached.
- ▶ Set the main mode switch to “road mode”.

20.1.4 Swivelling spout into transport position

⚠ WARNING

Crush hazard due to the moving spout

People, who are near the drive sprocket of the spout when the spout is being swivelled, may be injured.

- ▶ When swivelling the spout, ensure that there is nobody near the drive sprocket.

⚠ WARNING

Risk of injury caused by put down spout (with mounted spout extension)

With mounted spout extension (optional), the spout flap extends as far downward when spout is put down so that road users are endangered during road travel.

- ▶ When driving on roads, fold in the spout extension (optional),*refer to page 378*.

- ✓ The driver's seat is occupied
- ✓ The diesel engine has been started
- ✓ The Main Mode Switch is in the "Field mode" position
- ✓ The main coupling is off

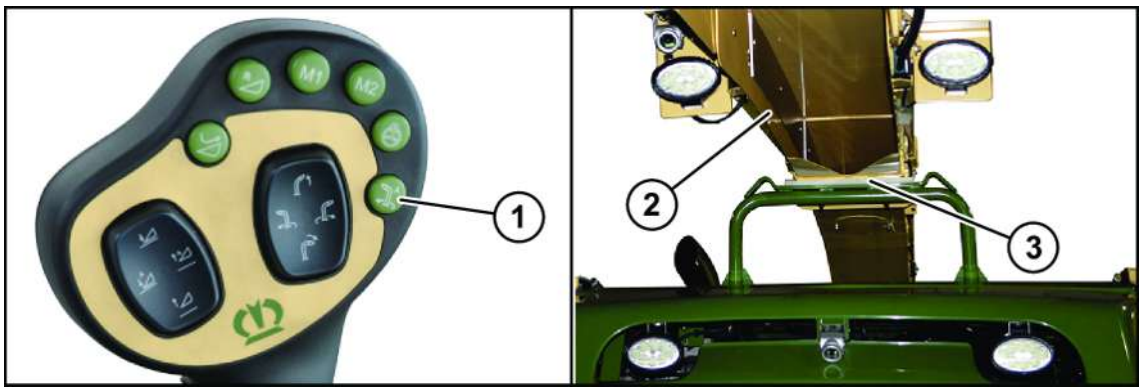

BXG000-098

To swivel the spout into the transport position:

- ▶ Press the "spout in transport position" key (1).

The spout (2) moves automatically into the transport position.

- ▶ Visually check the exact parking position of the spout (2) on the support bearing (3).

If the spout (2) is not centred on the support bearing:

- ▶ Use the manual control to move the spout into the correct position, *refer to page 378*.

20.2 Starting engine

⚠ WARNING

Risk of poisoning from toxic exhaust gases

If the machine is operated in closed rooms without adequate ventilation, the pollutant load increases in the air.

Thus there is a risk of serious injuries or death.

- ▶ Never allow the engine to run in closed rooms.
- ▶ Vent the room sufficiently.

⚠ WARNING

Impact and crushing hazard for people in the vicinity of the machine due to movement of the machine!

When the machine is put into motion, there is a risk for people in the vicinity of the machine of being overrun or crushed by the machine.

- ▶ Make sure that there is no one in the danger zone of the machine.
- ▶ Actuate the horn before starting the engine.
- ▶ Only start the engine from the driver's seat.

⚠ WARNING

Risk of injury during operation

If the driver is not protected from the engine noise while working, his hearing will be permanently damaged.

- ▶ Make sure that the doors and windows of the cabin are closed while the machine is used.

- ▶ If the engine was shut down beforehand for longer than 30 days, take measures to start up and start the engine following shutdown, *refer to page 447*.

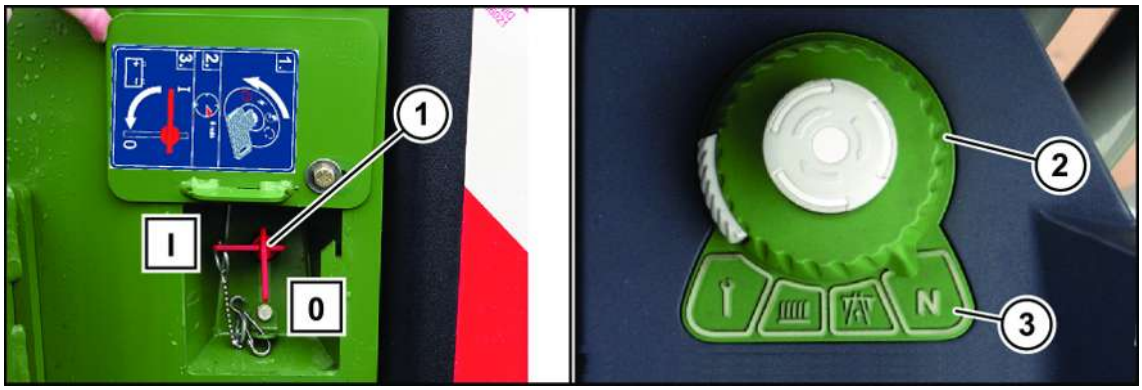

BX001-549

- ✓ The main battery switch (1) is in position “I” (circuit closed).
- ✓ The main mode switch (2) is set to “neutral mode” (3).

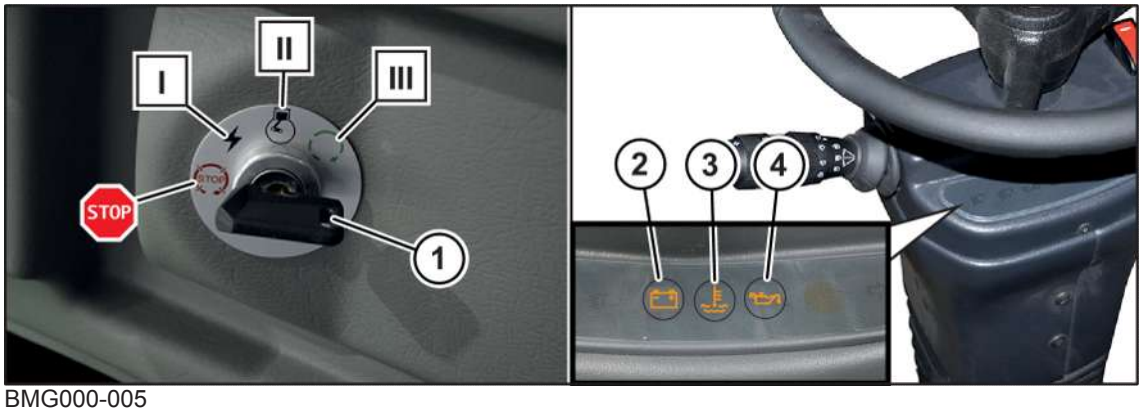

BMG000-005

- ▶ Turn the ignition key (1) in the ignition lock clockwise to position "II".
- ➡ The charging warning light (2), the "Coolant temperature" warning light (3) and the "Engine oil pressure" warning light (4) light up. After approx. 2 s the "Coolant temperature" warning light (3) and the "Engine oil pressure" warning light (4) go out.
- ▶ Turn the ignition key in the ignition lock to position "III".

When the engine starts:

- ▶ Immediately release the ignition key.
- ➡ The ignition key automatically jumps to the operating position.
- ➡ The charging warning light (2) goes out.
- ▶ Check the warning lights (2, 3, 4).
- ▶ Leave the engine to idle until the temperature display coolant rises.

If one or more of the warning lights (2, 3, 4) light up:

- ▶ Switch off the engine and eliminate the malfunction.

If the engine does not start within 30 s:

- ▶ Turn the ignition key to the "STOP" position.
- ▶ After a 1 minute delay repeat the starting process.

If the engine still does not start:

- ▶ Turn the ignition key to the "STOP" position.
- ▶ Rectify the cause of the poor starting behaviour, see applicable engine manufacturer operating instructions.

20.2.1 Observing warning lights

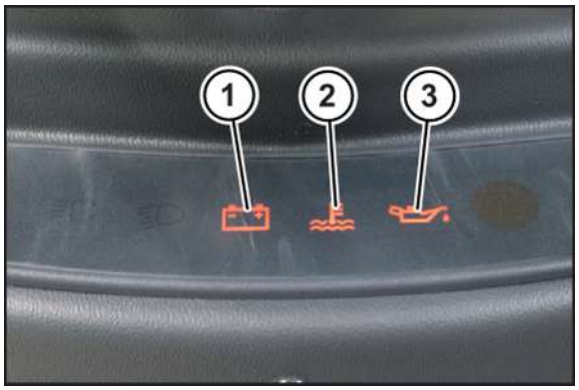

BMG000-006

- ▶ As long as the diesel engine is running, the indicator lamps on the steering column must be observed.

Charging warning light (1):

The charging warning light briefly lights up when the diesel engine has started and when the ignition key has been turned to ignition stages I and II.

If the charging warning light is lit continuously while the diesel engine is running, the output voltage of the alternator is not adequate to charge the batteries.

- Check the cables and connections on the alternator and the batteries, alternator *refer to page 548*, batteries *refer to page 544*.
- Check the V-belt on the alternator, *refer to page 548*.

Coolant temperature warning light (2):

When “Coolant temperature” warning light lights up, cooling of the engine is no longer ensured and the engine may be damaged.

- Immediately switch off the engine.
- Check coolant level and top up, if necessary.
- Check the condition and fastening of coolant hoses and air intake hoses.

Engine oil pressure warning light (3)

If the “Engine oil pressure” warning light lights up, lubrication of the diesel engine is no longer ensured and the engine may be damaged.

- Immediately switch off the engine.
- Check engine oil level.

20.3 Behaviour after the engine has stalled

NOTICE

Heat accumulation after the engine has stalled

If a warm engine stalls, the heat accumulation, caused by the lack of cooling, may damage the engine.

- Immediately start again when a warm engine is stalled.
- Before finally switching engine off, allow it to run at idle speed for at least 3 minutes.

20.4 Starting up machine

WARNING

Danger to life by movements of the machine

People are at risk from the large movements of the machine, unusual driving behaviour and the option of riding on the outside of the machine while it is being driven.

- Make sure that there is no second person on the machine when travelling.
- Adapt driving speed of machine on road and field to the given conditions.
- When driving down hills, on inclines or through obstacles, adjust driving behaviour to environmental conditions.
- Make sure when driving around curves that the machine does not swing out.

20.4.1 Setting the acceleration behaviour

BXG000-016

Four different acceleration stages can be selected, even while driving, with the "Acceleration stage" switch (2) attached to the control lever (1).

If the control lever (1) is actuated constantly in one direction and at a constant engine speed, the driving speed will increase slowest in acceleration stage I and fastest in acceleration stage IV.

- ▶ Switch to the required acceleration stage using the "Acceleration stage" switch (2).
- ➡ The selected acceleration stage (3) is displayed on the working screen of the terminal.

20.4.2 Notes on driving the machine

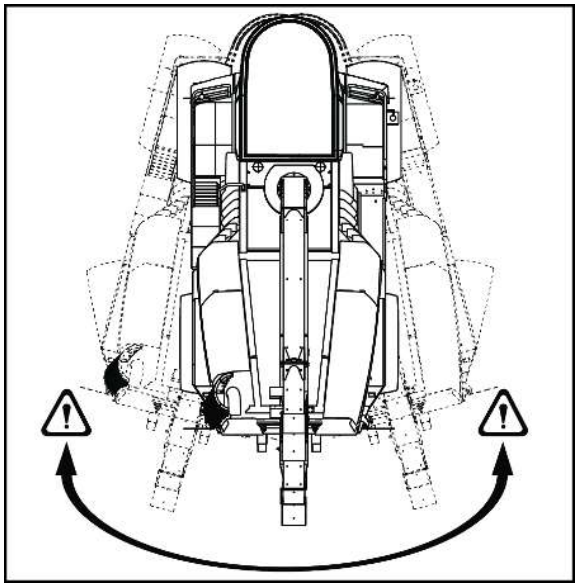

BX001-553

- ▶ Adapt driving behaviour to the modified handling of the machine due to rear steering.
- ▶ Take into consideration the different ways the machine handles in acceleration stages 1 - 4.
- ▶ Respond to the different handling of the machine in road mode and field mode
- ▶ If an error message is indicated on the terminal, immediately stop and eliminate the error. If this is not possible, inform a KRONE service partner.
- ▶ Adapt driving behaviour to the particular terrain and ground conditions, *refer to page 372*.

Emergency steering forces

The steering also operates when the engine has stopped. However, considerably more force must be applied.

20.4.3 Driving forwards and stopping

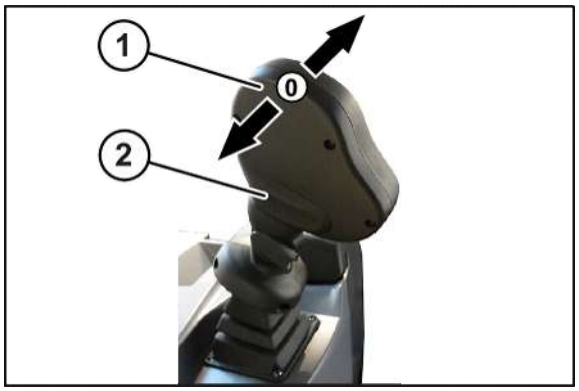

BM000-018

Driving forwards from standstill:

- ▶ Set the main mode switch to “road mode” or “field mode” position, *refer to page 101*.
- ▶ Release the parking brake, *refer to page 352*.
- ▶ Press and hold the activation key for traction drive (2).
- ▶ Push control lever (1) to the front.
- ➡ The machine moves forward and accelerates.
- ▶ Release the control lever (1) to keep the speed at constant level.
- ➡ The control lever automatically returns to the central position (0).
- ▶ To slow down the machine, pull the control lever (1) backward while driving.
- ➡ The machine is decelerated until it is at standstill.

20.4.3.1 Cruise control

The cruise control can be activated only when travelling forwards.

When cruise control is activated, the machine is accelerated or decelerated with the set acceleration stage to the speed saved for operation with the cruise control.

Saving speed for operation with cruise control

BXG000-017

- ▶ Accelerate the machine to the desired speed.
- ▶ While driving, press and hold down the activation key for the traction drive (2) and at the same time, move the control lever (1) to the right and back to the central position.
- ➡ The current driving speed is saved.

The saved speed (3) is displayed on the working screen of the terminal display.

The speed is saved for the operating mode the machine is currently in. One speed each can be saved for road travel and field mode.

If the operating mode (“Road mode”/”Field mode”) is changed, the display switches to the value saved for the corresponding operating mode (road or field speed).

Activating cruise control

BX001-555

- ▶ While driving, actuate the control lever (1) to the right.
- ➡ The machine is started with the set speed.

  The icon 

with the value of the set speed appears on the display.

Deactivating cruise control

Cruise control is deactivated by overriding the control lever, actuating the service brake or switching off the traction drive.

20.4.4 Driving backward and stopping

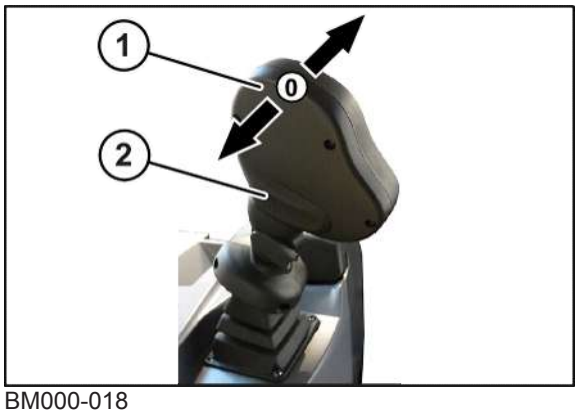

BM000-018

Reverse from standstill:

- ▶ Set the main mode switch to “road mode” or “field mode” position, *refer to page 101*.
- ▶ Release the parking brake, *refer to page 352*.
- ▶ Press and hold down the activation key for traction drive (2).
- ▶ Pull control lever (1) to the rear.
- ➡ The machine moves backward and accelerates.
- ▶ Release the control lever (1) to keep the speed at constant level.
- ➡ The control lever automatically returns to central position (0).
- ▶ To decelerate the machine, push control lever (1) to the front while driving.
- ➡ The machine is decelerated until it is at standstill.

NOTICE
An acoustic warning signal sounds when reversing.

20.5 Stopping the machine

The machine can be stopped with both control lever and service brake.

20.5.1 Stopping machine by using control lever

Stopping from forward travel

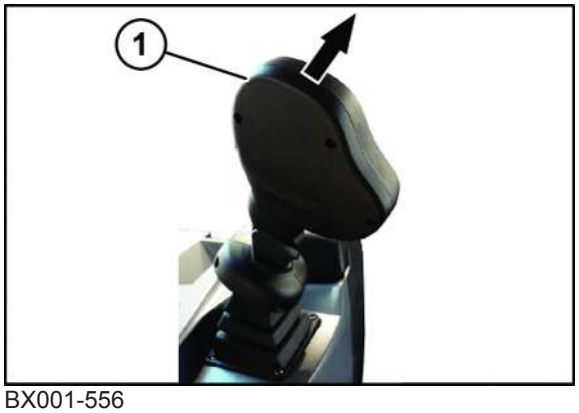

BX001-556

- ▶ Pull the control lever (1) backwards while driving.
- ➡ The machine decelerates until it stops.

Stopping from reverse travel

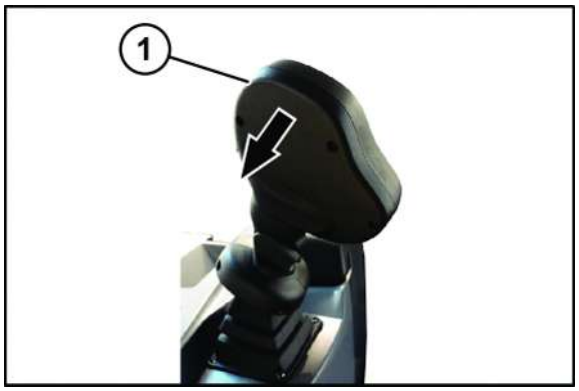

BX001-557

- ▶ Push the control lever (1) forwards while driving.
- ➡ The machine decelerates until it stops.

Quickly braking the machine

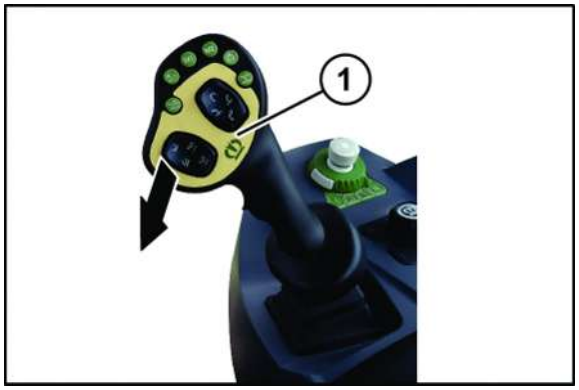

BX001-558

- ▶ To brake the machine quickly, move the control lever (1) to the left while driving.

Fast change of direction of travel (fast reversing)

During fast reversing, the machine decelerates to a standstill and accelerates in the opposite direction to 70% of the previous driving speed.

Fast reversing is possible in field mode only.

BMG000-007

✓ The main mode switch is in the "field mode" position.

To activate fast reversing:

▶ While driving, press and hold down the activation key for the traction drive (2), move the control lever (1) to the left and back to the central position.

20.5.2 Stopping machine with the service brake

⚠ *WARNING*

Risk of injury due to defective service brake

If the service brake has a restricted function, the machine cannot be brought to a standstill in time and people and material assets are at risk.

▶ Before starting the machine, always check service brake and ensure its functionality.

Braking the machine slightly

▶ Depress the foot brake slightly.

➡ When the brake pedal is released, the machine continues moving at the reduced driving speed.

Braking the machine forcefully (hazard braking)

▶ Depress the service brake very forcefully.

➡ The machine is braked to an immediate standstill.

20.6 Couple brake pedals (for "trailer brake system" version)

⚠ *WARNING*

Danger of death due to extended braking distance

If the machine features a trailer brake system and if both brake pedals of the service brake are not interconnected for road travel, the braking distance will be extended. If only one of the two service brakes is actuated, the individual braking effect of the service brake machine and service brake trailer will not be adequate to stop the machine/trailer unit in good time. As a result, people may be seriously injured or killed.

▶ Before road travel, ensure that both brake pedals are interconnected.

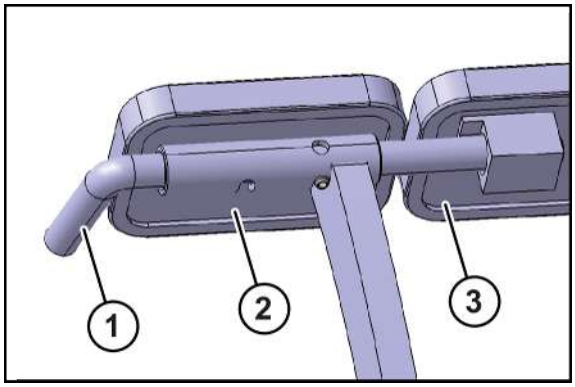

BX001-879

Before starting road travel, connect the brake pedal of the foot brake (3) to the brake pedal of the trailer brake (2):

- Turn the connecting bolt (1) upwards.
- Push in the connecting bolt (1) as far as it will go.
- Engage the connecting bolt (1) by turning it downwards.

20.7 Applying parking brake

⚠ *WARNING*

Risk of injury due to the unsecured machine rolling away

If the unsecured machine starts moving, there is a risk of people being struck or run over.

- When the “Parking brake” key has been pressed, check the status of the parking brake on the terminal or via the LED in the “Parking brake” key.

INFORMATION

If the "Parking brake" key is pressed while driving, the traction drive is braked and, when the machine has stopped, the parking brake is applied.

The parking brake is automatically released or applied under certain operating conditions and can be manually actuated by pressing the "Parking brake" key (1).

BXG000-013

To apply the parking brake manually via the keypad:

- Press the "Parking brake" key (1).

To release the parking brake manually via the keypad:

- When the diesel engine is running, depress the brake pedal.
- Press the "Parking brake" key (1).

The status of the parking brake is indicated by the LED in the "Parking brake" key:

▶ The parking brake has been applied when the LED is lit.

▶ The parking brake has been released when the LED is not lit.

EQG002-020

The status of the parking brake is also displayed on the working screen of the terminal:

- The parking brake has been applied when the "Parking brake"  indicator lamp appears on the terminal.
- The parking brake has been released when the "Parking brake" indicator lamp is not lit on the terminal.

Automatic actuation of the parking brake:

- The parking brake is automatically applied when the driver's seat is not occupied.
- The parking brake is automatically applied when the diesel engine is switched off.
- The parking brake is automatically released when the machine starts.
- The parking brake is automatically released when the brake pedal is depressed

20.8 Switching off the engine

NOTICE
Engine will be damaged by heat accumulation If the engine is immediately switched off after operation under load, the heat accumulation, caused by the lack of cooling, may damage the engine. ▶ Before switching off the engine, let it run at idle speed for at least 3 minutes.

- Stop the machine, *refer to page 349*.
- To cool down the engine, leave the engine running for three minutes at a low idle speed.

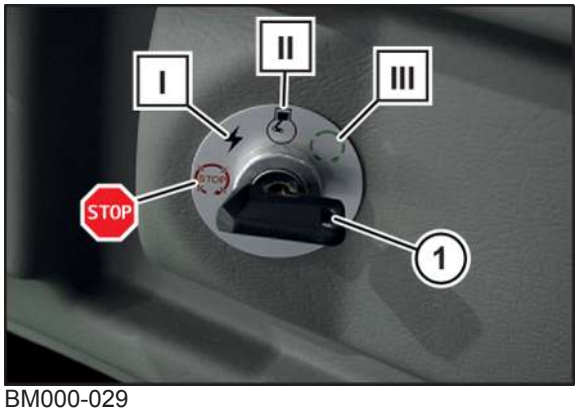

BM000-029

- Turn the ignition key (1) anti-clockwise to the "STOP" position.
- Move the main mode switch into the "Neutral" position, *refer to page 101*.
- If the engine will be shut down for longer than 30 days, take measures to shut it down, *refer to page 447*.

20.9 Wheel chocks

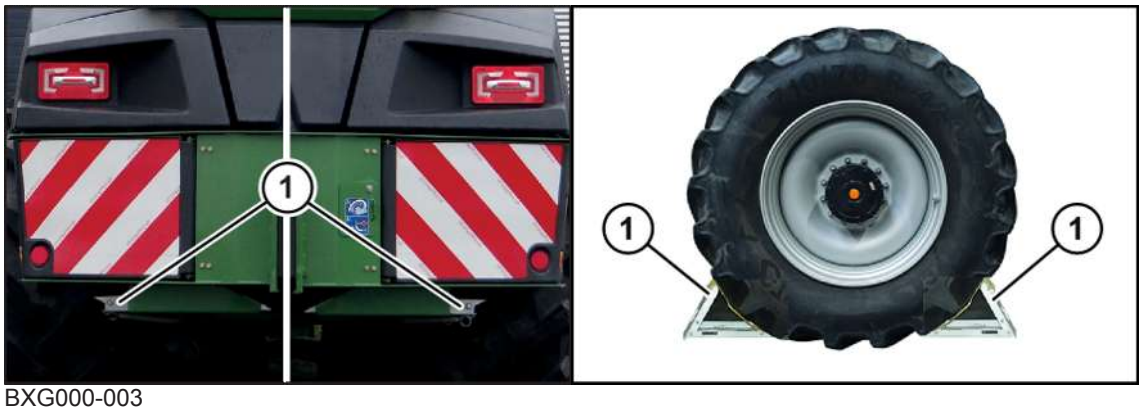

BXG000-003

The machine features 2 wheel chocks (1) which are located under the rear bumper.

- Ensure that the wheel chocks (1) are always carried along.
- When parking, secure the machine against rolling away using both wheel chocks (1).
- Place the wheel chocks (1) tightly up against the wheel, in front of and behind it, to prevent the machine from rolling away.

20.10 Main battery switch

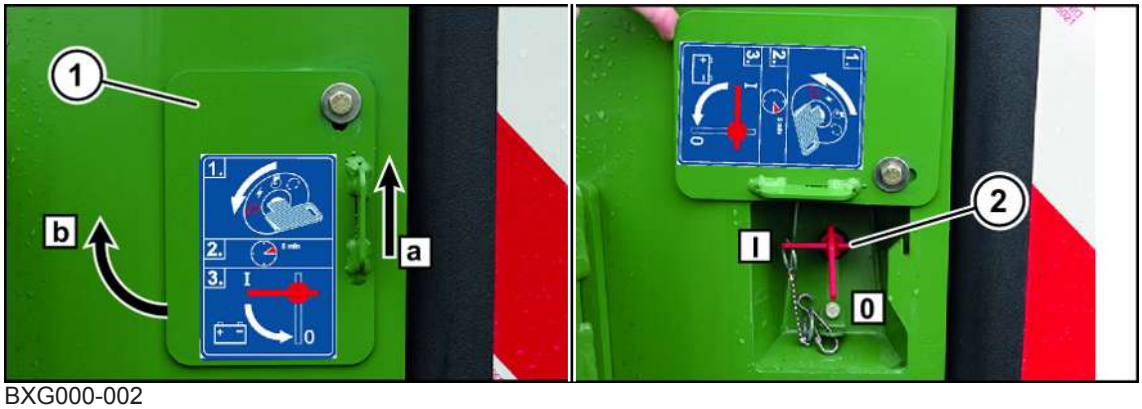

BXG000-002

The main battery switch (2) is used to switch on or interrupt the machine's power supply.

- ▶ After using the machine, in emergencies and for repairs, interrupt the power supply.

NOTICE

Damage to dosing unit in the mixing tube caused by overheating

The dosing unit may be damaged if it is not cooled after the engine is switched off. In order to guarantee sufficient cooling, wait for at least 5 minutes after the engine has been switched off before the main battery switch can be switched to "0" position.
To ensure that the dosing unit is cooled, respect the following procedure:

- ▶ Turn ignition key to "STOP" position.
- ▶ Wait for at least 5 minutes.
- ▶ Set the main battery switch to "0" position.

The main battery switch is located in the direction of travel on the right in the rear bumper behind the flap (1).

- ▶ Lift the flap with the handle (a) and swivel it up to the left (b).
- ▶ To interrupt the circuit, turn the main battery switch (2) from position "I" to position "0".

INFORMATION

In an emergency, the main battery switch can also be actuated when the ignition key is not in the "STOP" position.

20.11 Parking the machine

WARNING

Risk of injury due to the unsecured machine rolling away

If the machine is not secured against rolling away when it has been switched off, there is a risk of people being injured by the machine rolling away in an uncontrolled manner.

- ▶ Secure the machine against rolling using wheel chocks.

NOTICE

Damage to dosing unit in the mixing tube caused by overheating

The dosing unit may be damaged if it is not cooled after the engine is switched off. In order to guarantee sufficient cooling, wait for at least 5 minutes after the engine has been switched off before the main battery switch can be switched to “0” position.
To ensure that the dosing unit is cooled, respect the following procedure:

- Turn ignition key to “STOP” position.
- Wait for at least 5 minutes.
- Set the main battery switch to “0” position.

To park the machine safely and secure it against rolling away:

- Stop the machine on a level, solid surface.
- Place the header on the ground.
- Set the main mode switch to “neutral mode”.
- To tighten the parking brake, actuate the “Parking brake” key.
- To allow the engine to cool off, let it run at lower idle for three minutes.
- Turn the ignition key anti-clockwise to the “STOP” position, remove the ignition key and take it with you.
- Mount the both wheel chocks.

20.12 Towing the machine

WARNING

Risk of accident due to increased steering and braking forces.

If the machine is being towed a longer distance, there is a danger that the driver will loose control of the machine, because the diesel engine is stopped, which increases steering and braking forces. As a result, people may be seriously injured or killed.

- Ensure that there is nobody inside the danger zone.
- Tow the machine out of the danger zone only and never tow over prolonged distances.
- Note that steering and braking forces are increased when the diesel engine is stationary.

NOTICE

Damage to the machine due to incorrect operation

If the machine is not towed correctly, power transmission components or the diesel engine may be damaged.

- Do not tow the machine unless absolutely essential.
- Tow the machine by pushing it with the attached tow bar only.
- Tow the machine at maximum 8 km/h and for not longer than 45 min.
- Turn the Main Mode Switch to "Neutral mode".
- Release the parking brake, if required release manually, *refer to page 357*.
- Switch off the diesel engine.
- Switch on the ignition so that the direction indicators/flashing warning lamps and the brake lamps function.
- Pull out fuses F98 and F29 so that the hydraulic motors run at idle, *refer to page 571*.

For towing, choose either the tow coupling or, according to the fitted header, suitable suspension points at the front side of the machine.

- Remove the fuses F98 and F29, *refer to page 571*.
- Turn the Main Mode Switch to "Neutral mode".
- Release the parking brake.
- Switch off the diesel engine.
- Turn the ignition key in the ignition lock to the "I" position so that the direction indicators/ flashing warning lamps and the brake lamps function.

If the machine no longer builds up the oil pressure required for releasing the parking brake:

- Release the parking brake manually, *refer to page 357*.

20.12.1 Releasing the parking brake manually

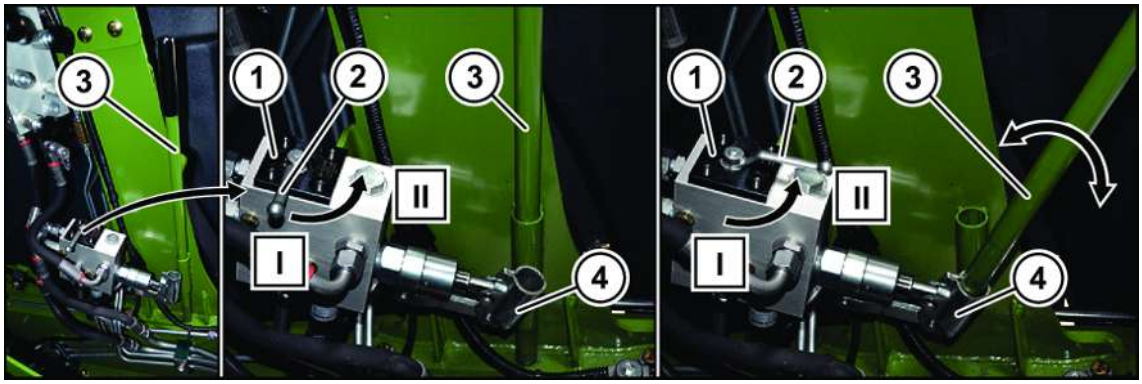

BXG000-062

Securing the machine against rolling away:

- Shut down and secure the machine, *refer to page 34*
- Place the wheel chocks on the right and left, in front of and behind the wheels of the front axle.

The parking brake can be released with the hand pump (1):

- ▶ Swivel the stop cock (2) into the closed position (II).
- ▶ Insert the pump lever (3) into the pump holder (4) on the hand pump.
- ▶ Release the parking brake by pumping the hand pump.

If the effort during pumping increases considerably:

- ▶ Check whether the brake has been released by moving the machine.
- ➡ As long as the stop cock (2) is in the closed position (II), the parking brake is released.

Restoring the braking function on the parking brake:

- ▶ Swivel the stop cock (2) into the open position (I).

20.13 Preparing the machine for shipment

NOTICE

Risk of accident if machine not correctly prepared

If the machine is not correctly prepared for transportation by vehicle, this may result in accidents and damage to the machine.

- ▶ Carry out the following measures to prepare for conveyance of the machine.

- ✓ No header is mounted on the machine.
- ▶ Move the spout into transport position, *refer to page 342*.
- ▶ Move the intake into transport position, *refer to page 341*.
- ▶ Ensure that the rear axle is in the middle position so that the vehicle chassis is horizontal. If required, raise or lower the rear axle using the keypad, *refer to page 99*.
- ▶ After parking the machine, shut down and safeguard the machine, *refer to page 34*.
- ▶ Ensure that the cabin door, the side window and the hoods are closed.
- ▶ Interrupt the power supply by pressing the main battery switch, *refer to page 355*.
- ▶ Secure the machine using suitable lashing material at the designated lashing points, *refer to page 358*.

20.13.1 Lashing points

WARNING

Danger to life caused by uncontrolled machine movement

If the machine is not properly lashed for transportation by vehicle, the machine may move in an uncontrolled manner and endanger people.

- ▶ Before transporting the machine, secure it properly to the designated lashing points using suitable lashing material.

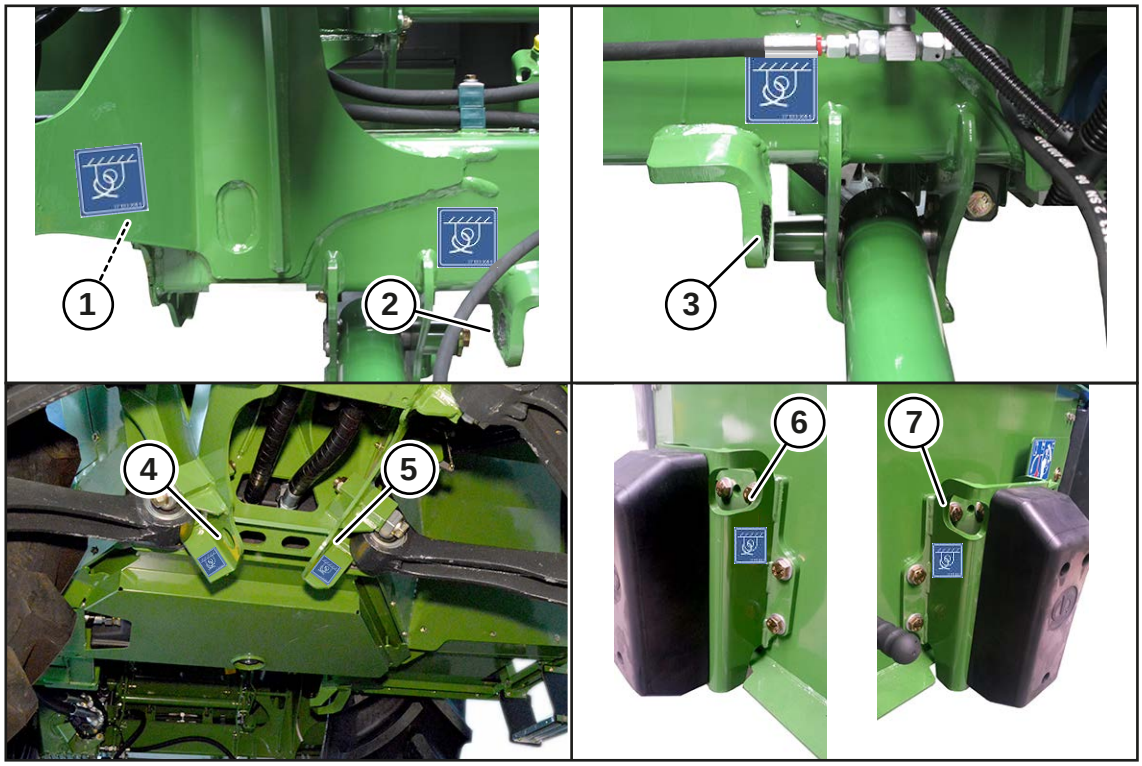

BX001-619

Appropriate lashing points are provided on the machine for attachment of the lashing material.

Pos.	Explanation
1	Front axle lashing point on outside right
2	Front axle lashing point on right
3	Front axle lashing point on left
4	Rear axle lashing point on left
5	Rear axle lashing point on right
6	Bumper lashing point on left
7	Bumper lashing point on right

20.13.2 Removing the machine wheels

The wheels must be removed if this is necessary to transport the machine. The machine may only be jacked up by authorised technicians, *refer to page 592*.

21 Operation device

⚠ WARNING

Risk of injury due to non-observance of relevant safety notices

If the relevant safety notices are not observed, persons may get seriously injured or killed.

- To avoid accidents, the basic safety instructions must be read and observed, *refer to page 19*.

⚠ WARNING

Risk of injury due to non-observance of safety instructions

If the relevant safety routines are not observed, persons may be seriously injured or killed.

- The safety routines must be read and observed to avoid accidents, *refer to page 34*.

⚠ WARNING

Risk of injury due to movement of the machine or machine parts

If people remain in or enter the danger zone of the machine during operation, there is an increased risk of injury.

- Do not start the machine until all safety devices have been fitted and are in sound condition.
- Ensure that there is nobody in the danger zone of the machine (safety distance: 3 m at the side, 5 m behind the machine).

  If people enter the danger zone:

- Stop machine immediately.
- Turn off PTO shaft.
- Instruct persons to leave the danger zone.
- Do not restart the machine until there is nobody in the danger zone.

Special instructions on the use of the particular header attached can be found in the operating instructions for the header.

The settings for field mode, such as operating mode, working width, header, intake, silage fodder addition, lifting unit, corn conditioner and customer data, *refer to page 125* and *refer to page 158*.

21.1 Raising and lowering lifting unit

⚠ WARNING

Risk of injury from movement of the header

If people are in the area of the header when it is being raised or lowered and folded in or out, there is a risk that these people may be caught and injured by the header or the lifting unit.

- When the header is moving, ensure that there is nobody in the area of the header or the lifting unit.

BX001-585

- ✓ The driver's seat is occupied.
- ✓ The diesel engine has been started.
- ✓ The main mode switch is in the "field mode" position.
- ✓ There is adequate space for lifting and lowering.
- ✓ There is nobody in the area of the intake

To raise the header (3):

- ▶ Press and hold down the "Manually raise lifting unit" key (1) on the control lever.

The header (3) is raised as long as the key is pressed.

When grass header is mounted, the maximum height which can be reached is the upper position of the intake.

When the maize header is folded in, the lifting height is limited to 60% of the maximum lifting height of the intake.

To lower the header (3):

- ▶ Press and hold down the "Manually lower lifting unit" key (2) on the control lever.

The header (3) is lowered as long as the key is pressed.

The lowest height is reached when the header touches the ground.

21.2 Aligning pendulum tube horizontally

> ***INFORMATION***
>
> The position and the status of pendulum tube can be displayed in the information area of the terminal, *refer to page 153*.

The pendulum tube can be raised and lowered on the left or right so that the movement of header can be adjusted to the ground contours.

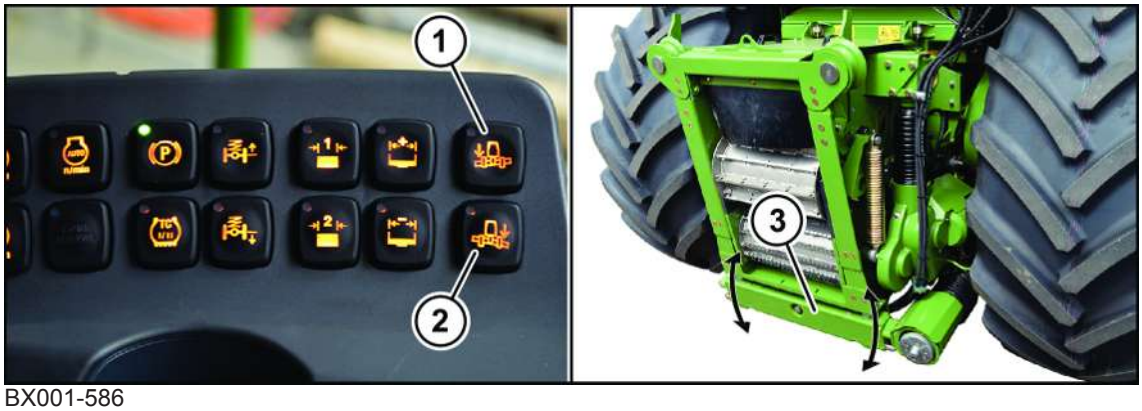

BX001-586

The pendulum tube must be adjusted horizontally for attachment of header.

To lower the pendulum tube (3) on the left and raise it on the right:

- Press and hold down the “Lower pendulum frame on left” key (1) until the pendulum tube is aligned horizontally.

To lower the pendulum tube (3) on the right and raise it on the left:

- Press and hold down the “Lower pendulum frame right” key (2) until the pendulum tube has been aligned horizontally.

21.3 Releasing header locking

For version with “Hydraulic comfort header locking with quick coupler”

The header locking lock fixes the headers if they have been supported by the roll guides of the forage harvester.

The locking is implemented by locking pins which move into a hole pattern in the locking sheets of the headers.

When fitting header to the machine for the first time and whenever changing the header, check the position of the locking sheets and the coupling disc and adjust if required. To adjust, see the header operating instructions.

BX001-587

To attach and remove header, the locking bolts (1) must be retracted. When selecting the “Header locking” function, the pendulum frame is automatically aligned horizontally.

✓ The header drive is switched off.

To open header locking, first select “Header locking” function in the additional keypad:

- Press “Open header locking” (2) key.
  - ⇨ The “Header locking” function is selected and the “Retract” key is lit.
- Press the “Retract” key (3) and hold it down.
  - ⇨ After 4 seconds, the locking bolts are pulled towards the middle of the vehicle and the header locking is opened.

The header locking remains open as long as the “Retract” key is pressed.

To close header locking again:

- Release the “Retract” key (3).

➡ The locking pins move outwards and the header locking is locked.

21.4 Trailer operation

⚠ WARNING

Risk of injury due to incorrect connection

The risk of accidents is increased by an incorrect connection.

- Connect only trailers which have a service brake system.
- Connect trailer to the hitch only.
- Observe the specifications in the operating instructions for the machine and trailer.
- When connecting and disconnecting a trailer, proceed particularly carefully and prudently.
- Ensure that the Technical limit values for trailer operation are observed, *refer to page 22* and *refer to page 65*.

NOTICE

Damage to the tow coupling and the parts of the drive

If stuck vehicles are retrieved using the tow coupling or are towed over prolonged distances, parts on the machine may be damaged.

- Tow the machine using the tow coupling at maximum 6 km/h and for not longer than 50 min.
- Do not use the tow coupling to retrieve the stuck machine.
- Do not use the tow coupling to tow other vehicles.
- Do not use the tow coupling to retrieve stuck vehicles.

The forage harvester is equipped as standard with a hitch.

Only trailers which have their own service brake system may be used.

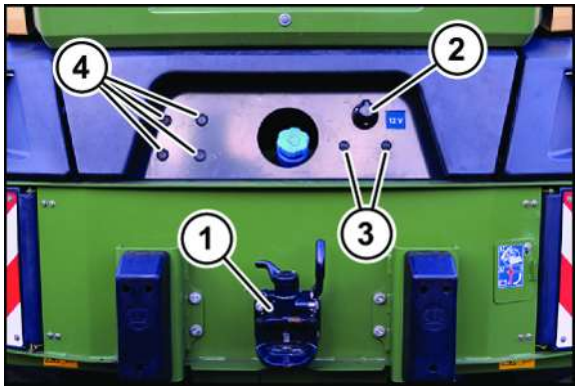

BXG000-015

1	Tow coupling	3	Compressed air connections for Dual line brake (optional)
2	12 volt socket for lighting (optional)	4	Auxiliary hydraulics (optional)

21.4.1 Connecting trailer

⚠ WARNING

Risk of injury due to non-roadworthy trailer/tractor combination

If the support, axle and trailer loads are exceeded during operation, the trailer/tractor combination is no longer roadworthy.

- When operating with the trailer, ensure that the permitted support, axle and trailer loads are not exceeded.

⚠ WARNING

Risk of injury due to unexpected movements of machine and trailer

If there are people between the machine and trailer during the coupling process and if the uncoupled trailer moves in an uncontrolled manner, there is a risk of injury.

- Make sure that there is no one between machine and trailer.
- Secure trailer against rolling away.

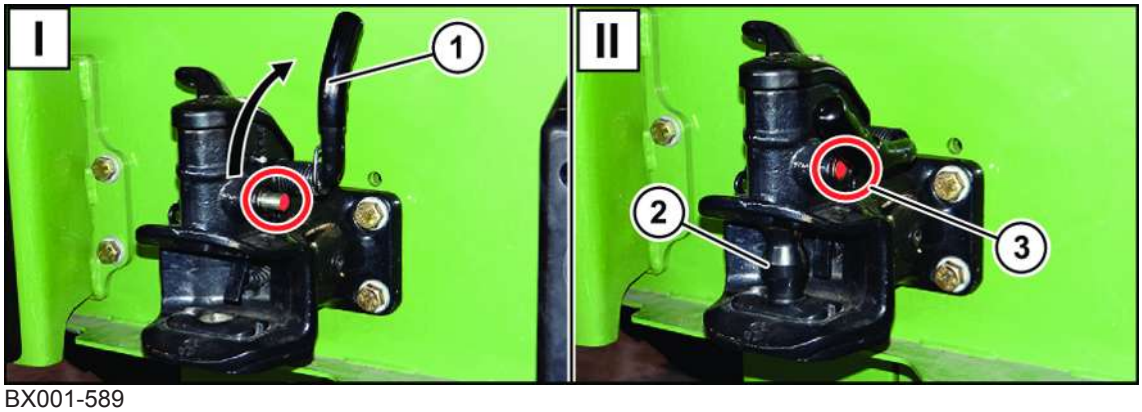

BX001-589

To connect the trailer:

- Secure the trailer against rolling away.
- Adjust the drawbar eye of the trailer to the height of the tow coupling.
- To open the tow coupling, press the hand lever (1) upwards as far as the locking point.
- Clean the tow coupling.
- Slowly reverse the machine until the drawbar eye engages in the tow coupling.

WARNING! Risk of injury due to insecurely locked trailer. After making the connection, ensure that the bolt (2) is completely engaged.

- Check whether the control pin (3) locks flush with the surface of the housing.
- Connect the power supply plugs and check the lighting system of the trailer.

If the trailer has a supporting wheel:

- Raise the support wheel.

21.4.2 Disconnecting trailer

⚠ WARNING

Risk of injury due to unexpected movements of machine and trailer

If there are people between the machine and trailer during the coupling process and if the uncoupled trailer moves in an uncontrolled manner, there is a risk of injury.

- Make sure that there is no one between machine and trailer.
- Secure trailer against rolling away.

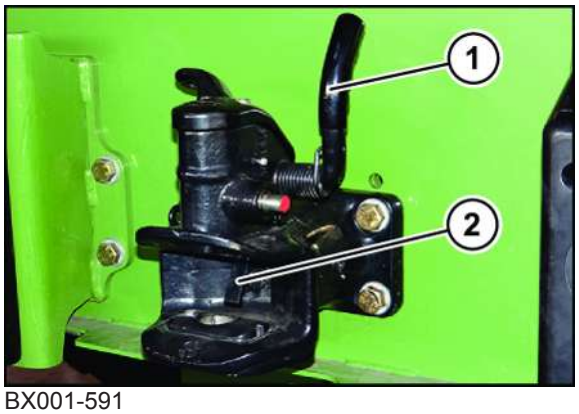

BX001-591

- Secure the trailer against rolling away.
- Remove the power supply plugs.

If the trailer has a supporting wheel:

- Lower the support wheel.

To disconnect the trailer:

- To open the tow coupling, press the hand lever (1) upwards as far as the locking point.
- Slowly move the machine forwards until the drawbar eye has been removed from the tow coupling.

WARNING! Injuries to hands caused by descending locking pin. Do not actuate the release lever (2) by hand. Actuate the tow coupling by hand using the hand lever (1) only.

To protect the aperture of the locking pin from soiling:

- Lock the tow coupling by pressing the hand lever (1) downwards.

21.5 Additional axle

The additional axle relieves the front axle so that the permitted front axle load with mounted header is not exceeded. For settings and diagnostics of additional axle*refer to page 206*.

The additional axle is only active in maize mode and the function is only ensured if the mounted header is detected by machine electronics.

With lowered additional axle, the relief pressure is also monitored when the machine is at standstill. If the pressure exceeds the set maximum value, the additional axle is relieved.

- Ensure that the plug connection of header is connected.

21.5.1 Maize mode

Road mode

If the machine is moving forwards faster than approx. 10 km/h, the additional axle is lowered if this has not already been done. Then the hydraulic pressure of the additional axle is adjusted.

If the machine moves backward in road mode, the additional axle is raised.

Field mode

In field mode, the additional axle is always raised.

21.5.2 Grass mode

In the “grass” mode, it is not possible to control the additional axle.

Diagnostics and maintenance of additional axle is not possible. Only the “Raise additional axle” function is available.

In “grass” mode, the additional axle must be moved manually into the upper end position or removed.

21.5.3 XDisc operating mode

In “XDisc” mode, it is not possible to control the additional axle.

Diagnostics and maintenance of additional axle is not possible. Only the “Raise additional axle” function is available.

In “XDisc” mode, the additional axle must be moved manually into the upper end position or removed.

21.6 Silage additives unit

⚠ *WARNING*

Risk of injury due to silage additives

If handled improperly, the chemicals used in the silage additives unit may cause damage to health.

- ▶ The silage additives unit may only be operated by persons who are familiar with these Operating Instructions and the safety data sheet of the manufacturer of the silage additives. The safety instructions issued by the silage additive manufacturer must be followed.
- ▶ The operator must be instructed in the safe handling of the chemicals used.

NOTICE

Damage to the silage additives unit due to low exterior temperatures

If there is any water left in the silage additives unit prior to it being stored for the winter, the unit is at risk of being damaged by frost.

- Fill the silage additives tank with a biological, non-aggressive frost protection agent prior to storing it for the winter and allow the silage additives unit to pump in "continuously active" mode for 2 minutes with a dosing quantity of 50%.
- After the winter, before the season begins, fill the silage additives tank with clear water and allow the silage additives unit to pump in "continuously active" mode for 10 minutes with a dosing quantity of 75%.

21.6.1 Internal silage additives unit coarse dosing

NOTICE

Damage to the silage additives unit by using incorrect silage additives

If the silage additives unit is operated with aggressive or corrosive silage additives, parts of the silage additives unit may be damaged.

- Do not use aggressive or corrosive silage additives in the silage additives unit.

This is a controlled silage additives unit with a silage additives tank on the right cabin platform.

Technical data

Pump	
Electrical connection	24 V direct voltage
Maximum power consumption	5 A
Housing material	Polypropylene (PP)
Diaphragm material	Santoprene
Valve set material	Viton
Bypass idle pressure	4.1 bar
Max. liquid temperature	77°
Delivery capacity (discharge accelerator injection point)	0.5 l/min to 5.0 l/min 30 l/h to 390 l/h
Maximum suction height	3.1 m
Type of application/duration	Intermittent/continuous operation

Flow sensor	
Housing/cover material	POM
Temperature range	0 ° C to +80 ° C
Measuring range	0.5 l/min to 100 l/min
Operating pressure/bursting pressure	5 bar / >8 bar
Operating temperature	0° C to 80° C

Operating silage additives unit coarse dosing

For operating and setting the silage additives unit, *refer to page 196*.

- When operating a silage additives unit, check whether the mounted nozzle is suitable for the set dosing quantity (blue nozzle: up to 2.5 L/min and white nozzle over 2.5 L/min). If required, replace the nozzle.
- If the nozzle was replaced, recalibrate the silage additives unit, *refer to page 197*.
- Calibrate the silage additives unit always with the nozzle installed and the silage additives unit flushed.

Settings in the Silage additives unit menu Coarse dosing

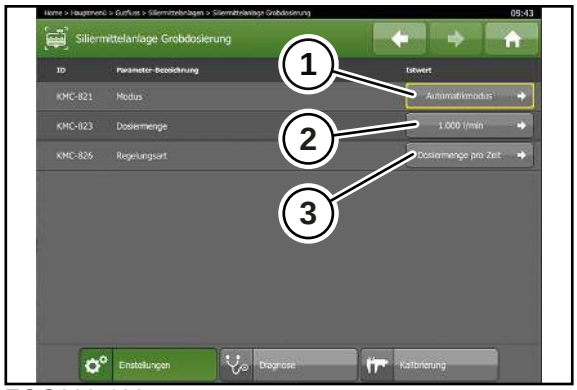

EQG003-102

Mode (1)	
Inactive	No silage additive is injected.
Continuously active	Silage additive is injected if the main mode switch is in the "Field mode" position.
Automatic mode	Silage additive is injected if the main coupling, the intake and the header are switched on at the same time and the header is in the working position at the same time and the machine moves forwards.
Crop flow cleaning headland	Silage additive is injected if the main coupling, the intake and the header are switched on at the same time and the header is in the headland position at the same time.

"Crop flow cleaning headland" mode is used to prevent the crop flow plates from sticking due to crops which contain sugar. "Crop flow cleaning headland" mode is the most effective method of cleaning the crop flow plates, provided the "Water injection" retrofit kit (20 429 353 *) has been installed. If the "water injection" retrofit kit has not been installed, water will come out of the silage additives nozzle only and the sheets in the crop flow will not be wetted with water.

Dosing quantity (2)	
1,000 L/min	Rate of the injected silage additive per minute
1,000 L/t	Rate of the injected silage additive per tonne

The dosing quantity of the injected silage additive switches to the unit "litres per minute" or "litres per tonne" depending on the set control type.

Control type (3)	
Dosing quantity per unit of time	Sets the "dosing quantity" parameter to the unit "litres per minute"
Dosing quantity per unit of weight	Sets the "dosing quantity" parameter to the unit "litres per tonne"

Conditions for the control type "dosing quantity per unit of weight"

- The control type "dosing quantity per unit of weight" is available for the "CropControl (yield recording)" version only.
- "CropControl" must have been calibrated.
- If the "CropControl" does not record and output any yield, no silage additive is injected in this setting. If silage additive is nevertheless to be injected, the control type must be set to "dosing quantity per unit of time".

Cleaning nozzle of the silage additives unit

Use the blue nozzle for a dosing quantity up to 2.5 L/min and the white nozzle for a dosing quantity over 2.5 L/min.

The nozzle of the silage additives unit is mounted on the right side of the discharge accelerator.

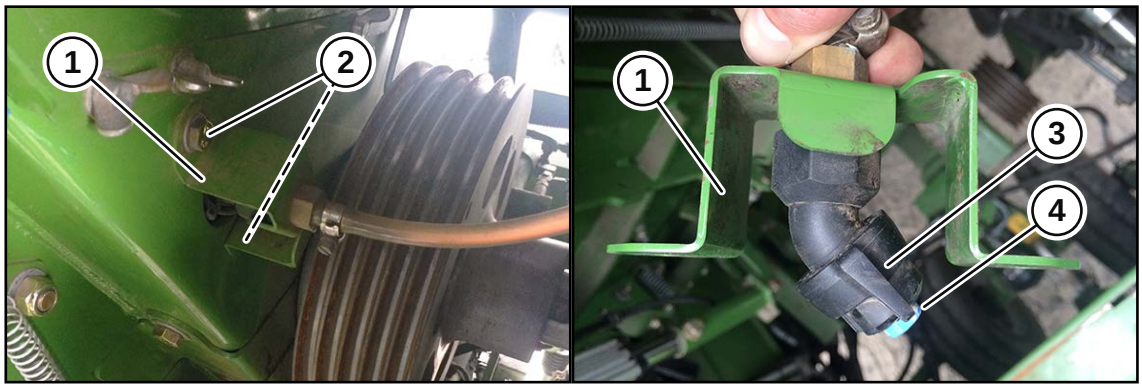

BX002-053 / BX002-054

▶ Remove the screws (2) and remove the support (1).

▶ Remove the nozzle (4) from the support (3).

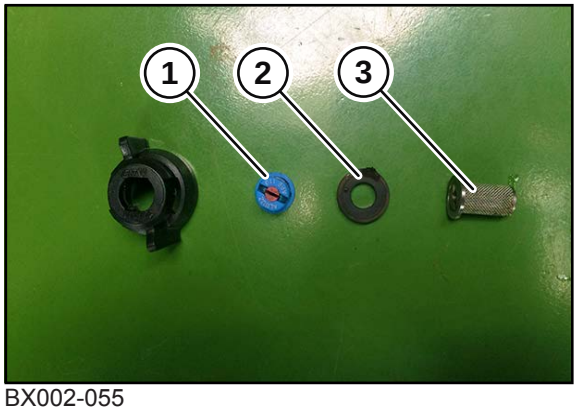

BX002-055

▶ Clean the nozzle (1), the seal (2) and the ball check valve filter (3).

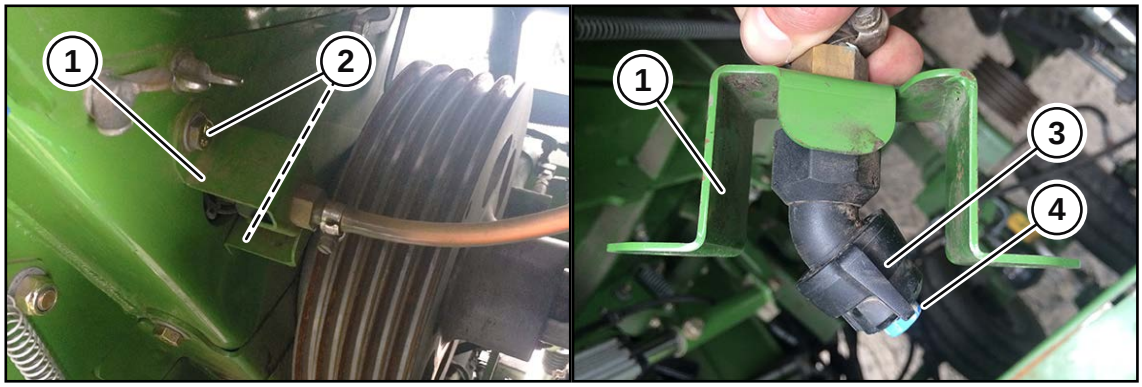

BX002-053 / BX002-054

- Insert the nozzle (4) into the support (3).
- Mount the support (1) on the right side of the discharge accelerator using the screws (2)
- If required, calibrate the silage additives unit, *refer to page 197*.

Cleaning internal silage additives unit

NOTICE
Damage to the flow sensor due to incorrect cleaning If the flow sensor is cleaned with compressed air, components may be damaged. ▶ Do not clean flow sensor with compressed air.

NOTICE
Damage to the environment caused by silage additives If the silage additives and the rinsing water leak into the ground or the surface water, the environment will be damaged ▶ Dispose of the silage additives residue and the rinsing water properly.

BX001-591

1	Silage additives tank	4	Suction filter element
2	Drain cock	5	Three-way stopcock
3	Silage additives pump	6	Flow sensor

The silage additives unit must be cleaned after each use:

BX002-056 / BX002-058

- Take the rinsing hose (1) out of the storage compartment, connect it to the drainage nozzle (2) of the silage additives tank and drain the silage additive into a suitable container.
- Clean the suction filter element (3).

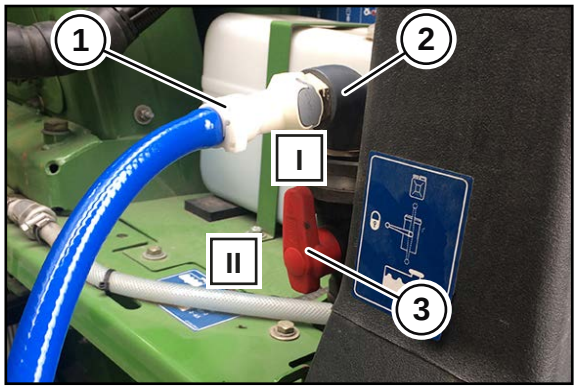

BX002-057

- Provide a tank containing 10 L of fresh water.
- Connect the rinsing hose (1) to the rinsing nozzle (2) of the silage additives unit and place the other end in the tank containing the water.
- Move the three-way stopcock (3) to position "I".
- Switch on the machine’s ignition.
- Set the main mode switch to the "field mode" position.
- Set the silage additives unit to "continuously active", *refer to page 196*.
- After rinsing, turn the three-way stopcock (3) to position "II" and remove the rinsing hose (1) from the rinsing nozzle (2) of the silage additives unit.

For operating and setting the silage additives unit, *refer to page 196*.

21.6.2 Connecting an additional silage additives unit (for "External silage additives unit" version)

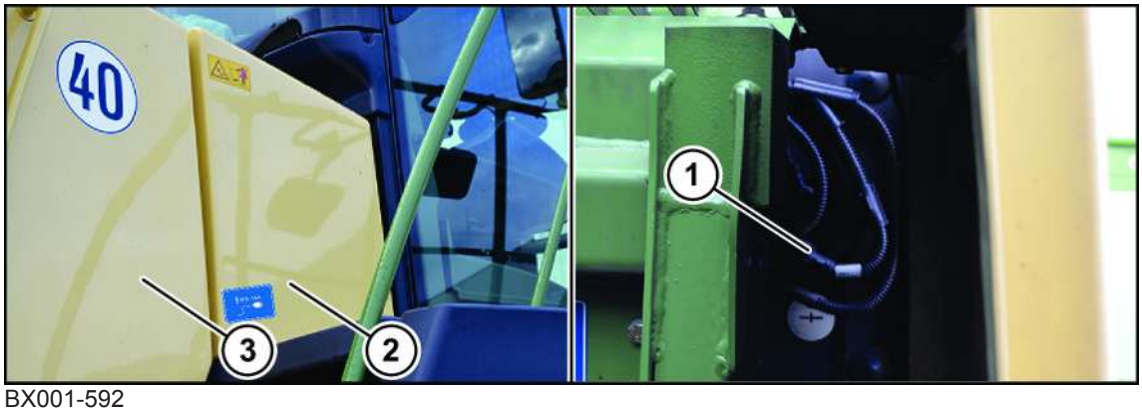

BX001-592

An external silage additives unit can be connected. The electrical connection (1) for the dosing unit is located behind the right side guard (2).

- To remove the right side guard (2), open the right side hood (3) and remove the right side guard.
- Connect the plug X224.2 (1) to the external dosing unit.
- Mount the guard (2).

Pin assignment:

Pin 1: +12 volt supply voltage

Pin 2: +12 volt control signal

Pin 3: Ground

The maximum amperage is 15 A.

For operating and setting the silage additives unit, *refer to page 196*.

21.7 Field mode on slopes

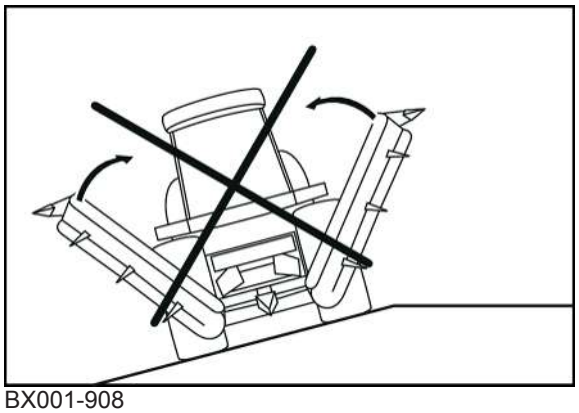

BX001-908

- When using the forage harvester with a maize header, do not bring the maize header from working position into transport position or from transport position into working position as long as the machine is on a diagonal to the slope.
- Before working on a slope, increase the tyre pressure in the front wheels by 0.5 bar more than indicated in the tyre pressure table, *refer to page 71*.
- After working on the slope, the tyre pressure must be set to the values in the tyre pressure table, *refer to page 71*.

21.8 Fast change of direction of travel (fast reversing)

During fast reversing, the machine decelerates to a standstill and accelerates in the opposite direction to 70% of the previous driving speed.

Fast reversing is possible in field mode only.

BMG000-007

✓ The main mode switch is in the "field mode" position.

To activate fast reversing:

▶ While driving, press and hold down the activation key for the traction drive (2), move the control lever (1) to the left and back to the central position.

21.9 Operating intake/header

⚠ *WARNING*

Risk of injury from moving components of intake or header

When the intake and header are switched on, unforeseeable movements of the intake rollers and header may occur and endanger people.

▶ Ensure that people are at an adequate distance from the intake and the header.

NOTICE

Damage to the machine by turning the quick connector without attached header

If the quick connector is driven without the header attached, the machine may be damaged, as the clutch disc of the quick connector is not controlled.

▶ Ensure that the quick connector is not driven unless a header has been attached.

▶ If the intake is to be run without a header for maintenance purposes, remove the universal shaft from the forage harvester beforehand.

To adjust the setpoint speed of header and the chop length, *refer to page 150*.

Switching on intake/header

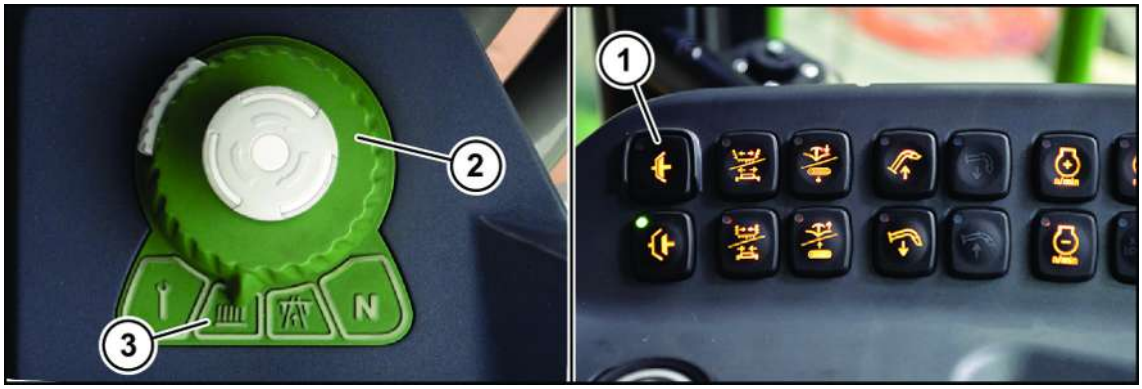

BX001-593

- ✓ The driver's seat is occupied.
- ✓ The engine has been started.
- ✓ The header profile which matches the header has been set, *refer to page 180* or *refer to page 209*.
- ✓ The main mode switch (2) is in the "Field mode" position (3).
- ✓ The main coupling has been switched off (1)

> ***INFORMATION***
>
> When the intake and header are switched on for the first time, the intake rollers and the header must be reversed by the driver to remove any soiling. Only then can the intake and header be switched on.

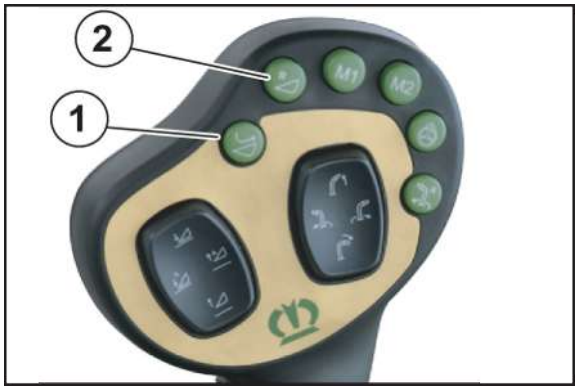

BX000-324

To switch on the intake/header:

- ▶ Press the "Reverse intake/header" key (2) on the control lever.

Reverse the header and the intake rollers.

- ▶ Press the “Intake/header on” key (1) on the control lever.

The header and the intake rollers are switched on.

Switching off intake/header

- ▶ Press the "Intake/header on/off" key (1) on the control lever.

The header and the intake rollers are switched off.

Reversing intake/header

To remove blockages and faults in the crop flow, which occur during operation, the intake and the header can be reversed.

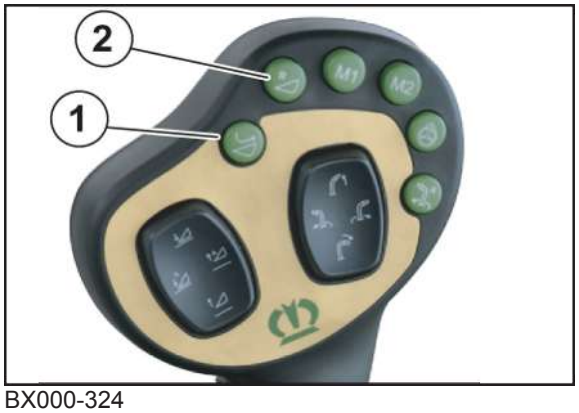

BX000-324

To reverse the intake/header from the driver's seat:

▶ Press and hold down the "Reverse intake/header" key (2) on the control lever.

The header and the intake rollers will reverse for as long as the "Reverse intake/header" key (2) is pressed.

The "Reverse intake/header" key (2) on the control lever can be pressed even when the intake/header is switched on. Then the intake/header must be switched on again.

21.10 Lifting unit control

To optimise field mode, the position of the header is controlled via the lifting unit of the forage harvester. To have the best conditions for the particular application, one of the three following lifting unit controls can be selected.

- Lifting unit position control
  When the lifting unit position control is active, the control unit sets the height of the header to a constant value relative to the machine.
- Lifting unit bearing pressure control
  When the lifting unit bearing pressure control is active, the control unit adjusts the pressure of the header on the ground to a constant value
- Lifting unit distance control (optional)
  When the lifting unit distance control is active, the control unit constantly adjusts the height of the header relative to the ground by active oscillation and automatic raising/lowering of the lifting unit. The lifting unit distance control can be activated only in conjunction with an attached maize header and with attached ground contour sensors.

To set the lifting unit control and the setpoint pressure or setpoint height, *refer to page 150*.

Activating the lifting unit position control

BXG000-019

✓ The lifting unit position control is set in the terminal.
✓ The lifting unit position control is currently inactive.

To lower the lifting unit:

- Press the "Lower lifting unit" key (1).

The lifting unit is lowered. The key has two levels. In the first level, the stroke speed runs slowly and in the second level, the stroke speed runs fast.

To raise the lifting unit:

- Press the "Raise lifting unit" key (2).

The lifting unit is raised. The key has two levels. In the first level, the lifting speed runs slowly and in the second level, the lifting speed runs fast.

Changing and saving the setpoint height (working height) on the control lever

- Use the "Raise lifting unit" (2) or "Lower lifting unit" (1) keys to move to the new setpoint height.
- Press the "Automatic lifting unit" key (3) for 3 seconds.

The new setpoint height is saved and a corresponding information message appears on the terminal.

Activating the set setpoint height

- Press the "Automatic lifting unit" key (3).

The lifting unit is raised or lowered to the set setpoint height. The icon 

is indicated with the set setpoint height on the terminal. The lifting unit position control is active.

Deactivating the lifting unit position control

The lifting unit position control is deactivated:

- If the lifting unit is manually controlled with keys (1) and (2).
- If the diagnostic electronics detect an error.

Setting and saving the lifting height for the headland

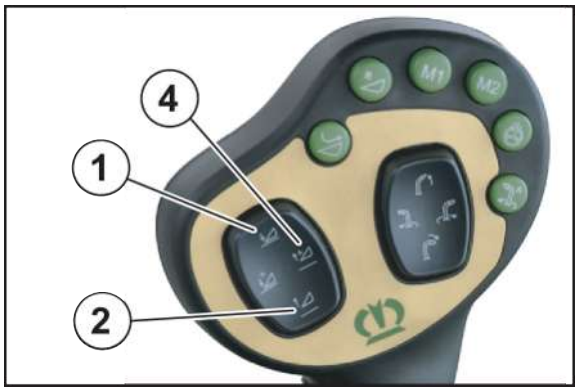

BX000-321

- Press the "Raise lifting unit" (2) or "Lower lifting unit" (1) keys to move to the lifting height.
- Press the "Raise lifting unit to top" key (4) for 3 seconds.

The lifting height is saved and a corresponding information message appears on the terminal.

Repeat the process for a new lifting height.

Raising lifting unit to the headland position

- Press the "Raise lifting unit to top" (4) key.

The lifting unit is raised to the set lifting height.

Activating the lifting unit bearing pressure control

BXG001-020

The following sequences: activation, control, activate setpoint pressure and change and save setpoint pressure on the terminal correspond to the procedure used for the lifting unit position control.

Raising and lowering the lifting unit for the lifting unit bearing pressure control

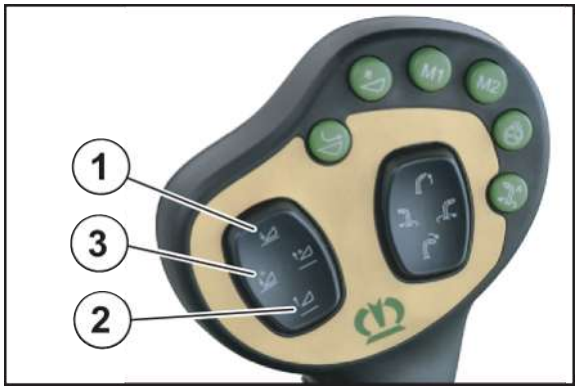

BX000-320

- Use the "Raise lifting unit" (2) or "Lower lifting unit" (1) keys.

When the key (1 or 2) has been released, the position controller keeps the lifting unit at a constant lifting height.

To activate the lifting unit bearing pressure control:

- Press the "Automatic lifting unit" key (3).

The lifting unit, controlled by positioned, is lowered to the ground and is automatically set to the lifting unit bearing pressure control.

Activating the lifting unit distance control (optional)

BXG001-020

The following sequences: activation, control, activate setpoint height and change and save setpoint height on the terminal correspond to the procedure used for the lifting unit position control.

21.11 Setting spout

⚠ WARNING

Risk of injury caused by deposited spout (with mounted spout extension)

With mounted spout extension (optional), the spout flap extends so far downwards when the spout has been deposited that road users are endangered during road travel.

- ▶ For road travel, fold in the spout extension.

The spout has been designed in such a way that it can be operated in trailer operation as well as with forage transport wagons driving in parallel alongside on the right and left.

The movements of the spout are controlled with the control lever and the keypad.

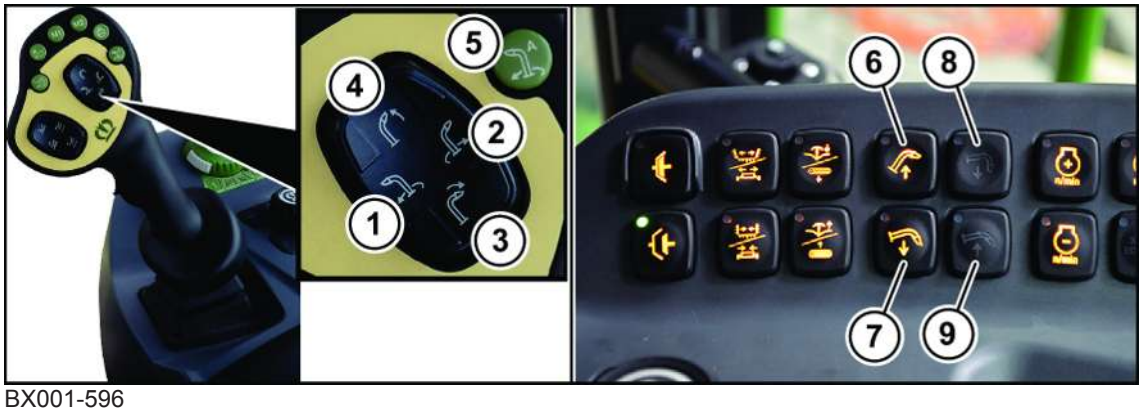

BX001-596

Pos.	Designation	Explanation
1	"Turn spout left" key	Turns the spout to the left
2	"Turn spout right" key	Turns the spout to the right
3	"Spout flap down" key	Lowers the spout flap
4	"Spout flap up" key	Raises the spout flap
5	"Reversing/parking spout" key	When main coupling is switched on: Reverses the position of the spout
		When main coupling is switched off: Swivels the spout into the transport position

Pos.	Designation	Explanation
6	"Raise spout" key	Raises the spout.
7	"Lower spout" key	Lowers the spout.
8	"Fold in spout extension" key	Folds in the spout extension (optional).
9	"Fold out spout extension" key	Folds out the spout extension (optional)

21.12 Adjusting discharge distance

For "StreamControl" version

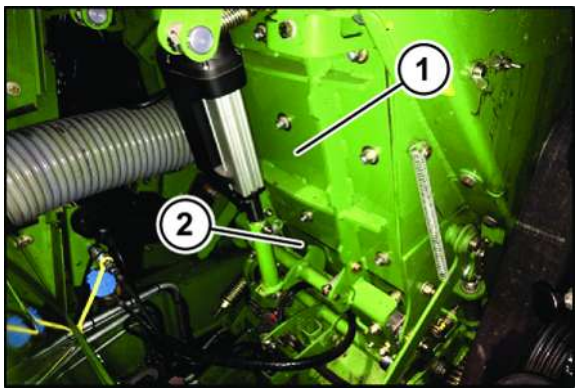

BXG000-045

The StreamControl is implemented via the discharge accelerator rear wall (1) and consists of an adjustable deflector sheet (2) which can be swivelled into the flow of the crops. The deflection of the crop flow affects the discharge distance of the chopping crops.

The StreamControl is operated with the additional keypad, *refer to page 103*.

In addition, the "M1" and "M2" keys of the control lever can be assigned with the adjustment of the discharge distance, *refer to page 171*.

The dimension, by which the adjustable deflector sheet is swivelled into the crop flow, can be set on the terminal, *refer to page 192*.

21.13 TractionControl/Traction control system

TractionControl is a connectable traction control system which can be adjusted in two stages.

TC I allows only little slip (spinning wheels). This setting is usually used in grass mode to protect the sward.

TC II allows increased slip. This setting is normally used in maize mode to ensure adequate propulsion even under difficult conditions.

The selection of the traction control system stage does not depend on the operating mode (grass/maize) set on the terminal.

BXG000-021

To activate the traction control system and adjust the sensitivity:

- Press “Traction control system” (1) key until the desired status is reached.

The status of traction control system is displayed on the terminal by the “indicator lamp for TractionControl” (2),*refer to page 155*.

21.14 Automatic steering system

⚠ WARNING

Danger to life due to automatically controlled machine

The forage harvester with activated automatic steering system is automatically controlled and is monitored only by the driver while driving. This means that people near the machine and along the route of the machine are in danger.

- Use the automatic steering system in open country exclusively for automatically guiding the forage harvester on a row of thin-stemmed plants or with a GPS-based steering system.
- Do not use the machine with activated automatic steering system on public highways, in yard areas or near people.

⚠ WARNING

Danger to life due to automatically controlled machine

If the automatic steering system is incorrectly installed or if the components of the automatic steering system have been tampered with, people near the forage harvester, which has an activated automatic steering system, are in danger, as the machine may make unexpected movements.

- The automatic steering system must only be mounted by authorised specialist workshop.
- Do not make any changes to the safety-relevant elements of the automatic steering system or to hydraulic, electrical or electronic components of the automatic steering system.

⚠ WARNING

Danger to life due to automatically controlled machine

Before starting up the automatic steering system, check that the controllable safety elements function.

- ▶ Check whether the automatic steering system switches off if the steering wheel is moved abruptly or if the driver leaves the driver's seat.
- ▶ Visually check that the row tracers, steering angle sensor as well as the visible hoses and wiring are in full working order (i.e. free of mechanical damage and leaks).

⚠ WARNING

Danger to life due to automatically controlled machine

When working with the automatic steering system activated, the driver must act particularly carefully and prudently so that he/she can respond if people and material assets are at risk.

- ▶ Ensure that there is nobody near the forage harvester, within a radius of 50 m.
- ▶ The driver must not leave the cabin of the machine during operation of automatic steering system.
- ▶ While the automatic steering system is in operation, the driver must regularly check the direction in which the machine is moving and its travel path to be able to take over manual control of the forage harvester immediately in the event of a hazardous situation or if obstructions or interruptions come up in the vehicle's path.

INFORMATION

When the rear axle has been completely raised or completely lowered, the automatic steering system operates less precisely. As a result, the tips of the header will not run exactly in the middle of the rows of maize plants.

To ensure precise guidance along the row of plants by the automatic steering system:

- ▶ Ensure that the rear axle is in the middle position (the vehicle chassis is horizontal).

The automatic steering system is an optional additional feature which automatically guides the forage harvester on a row of thin-stemmed plants.

The automatic steering system is available only in maize operating mode with a mounted EasyCollect or XCollect maize header and for the version with "Automatic steering system".

- ✓ The diesel engine is running.
- ✓ The driver's seat is occupied.
- ✓ The main mode switch is in the "field mode" position.
- ✓ The machine is on a level surface.

Perform chaffing preferably in "Row tracer automatic steering system" mode.

Now, the following modes can be used:

- ISO row tracer
- Row tracer automatic steering system

To set row tracer mode, *refer to page 205*.

BXG000-022

To activate the automatic steering system:

- ▶ Move the forage harvester parallel to the rows of plants; the automatic steering system can be switched on after 1 metre.
- ▶ Press the "Automatic steering system" key (2) on the control lever (1).

On the terminal the "Automatic steering system" (3) indicator lamp shows the current status of the automatic steering system. When the indicator lamp is pressed, the "Automatic steering system settings" menu opens, *refer to page 205*.

The automatic steering system now takes over the task of guiding the forage harvester along the row of plants in the selected mode via the row tracers on the maize header. In the case of short gaps in the maize crop the automatic steering system ensures that the machine drives straight ahead.

To deactivate the automatic steering system:

- ▶ Move the steering wheel abruptly.

Deactivation of the automatic steering system is indicated by an acoustic warning signal.

⚠ *WARNING*
Danger to life due to uncontrolled machine When the automatic steering system has been deactivated, the driver must take control of the machine again, otherwise the forage harvester is not controlled. ▶ After the automatic steering system has been deactivated, actively take control by using the steering wheel.

The automatic steering system is also automatically deactivated if:

- the driver's seat is left,
- the steering wheel is moved,
- the "Automatic steering system" key is pressed again,
- the Main Mode Switch is moved to "Road mode",
- one of the two quick-stop switches is pressed,
- the forage harvester stops for 1 min,
- if the system components of the automatic steering system are defective.

21.15 Setting chop length

The current chop length can be adjusted on the terminal.

- Via "Field mode" direct input on the terminal working screen
- Via the "Chop length" parameter in the main menu

2 values can be saved which can be called up during operation using the control lever or the keypad.

BXG000-023

Adjusting the current chop length via direct input:

- To reduce the chop length, press on the "Change chop length" field (1) .
- To increase the chop length, press on the "Change chop length" field (1) .

Adjusting values for the 1st and the 2nd saved chop length:

- In the main menu -> Menu Crop flow -> Submenu "Intake settings" adjust the parameters "1st saved chop length" and "2nd saved chop length".

Both saved chop lengths can be called up by pressing the "Chop length 1" and "Chop length 2" keys on the keypad.

BX001-601

Calling up the stored value for the 1st saved chop length:

- On the keypad press the "Chop length 1" key.

Calling up the stored value for the 2nd saved chop length:

- On the keypad press the "Chop length 2" key.

The saved chop lengths can also be called up via the control lever.

BXG000-046

To do this, the function keys on the control lever (2, 3) must be assigned with the saved chop length:

- In the main menu -> Menu Cabin -> Submenu "Settings" place the "Call up saved chop length" value on the "Function assignment keys M1/M2" parameter.

Calling up the stored value for the 1st saved chop length:

- On the control lever press the "M1" key.

Calling up the stored value for the 2nd saved chop length:

- On the keypad press the "M2" key.

21.16 Metal detection

The metal detection protects the machine from metal parts drawn in with the crops. The detectors are located in the lower feed drive roller.

If the system detects metal in the crops, the intake and header are immediately stopped.

BXG000-024

On the terminal the "Foreign object detection" (3) indicator lamp shows the current status of the metal detection and RockProtect. When the indicator lamp is pressed, the menu "Foreign object detection settings" opens, *refer to page 183*.

Adjusting the sensitivity of the metal detection:

- In the main menu -> menu Crop flow -> menu "Foreign object detection settings" set the sensitivity value.

When metal detection is triggered, intake and header stop immediately.

To rectify the problem:

- Reverse the intake and the header.
- Shut down and secure the machine, *refer to page 34*.
- Remove the metal part from the intake.

⚠ WARNING

Risk of injury from exposed, rotating chopping drum

If the chopping drum is engaged without intake and header, there is an increased risk of injury due to the rotating chopping drum which is not covered.

- When the metal detection is defective, only engage the chopping drum with removed intake via special switching routine.

INFORMATION

If the chopping drum does not engage due to an error in the metal detection of the chopping drum although there is no metal in the intake, it is nevertheless possible to engage the chopping drum by means of a special switching routine.

To engage the chopping drum in spite of defective metal detection:

- Switch on the diesel engine.
- Move the main mode switch to “Maintenance operation”.
- Press the “Main coupling on” key in the keypad for at least 5 s.

An information message appears in the terminal and the follow-up alarm is heard.

- Release the “Main coupling on” key and take note of the information message.
- Press the “Main coupling on” key for at least 2 s.

The chopping drum is engaged and the follow-up alarm goes out.

- Set the main mode switch to “Field mode” and work as usual.

21.17 RockProtect

RockProtect is a rock detection system which protects the machine from damage by larger foreign objects (e.g. stones). If the system detects a foreign object in the crops, the intake and header are immediately stopped.

The sensitivity of the rock detection must be adjusted to the particular working conditions, as even swathes of different sizes can trigger the rock detection.

BXG000-025

Activating the rock detection (RockProtect):

- In the main menu -> menu Crop flow -> menu "Foreign object detection settings" set the status of RockProtect to "active".

On the terminal the "Foreign object detection" (3) indicator lamp shows the current status of the metal detection and the rock detection (RockProtect). When the indicator lamp is pressed, the menu "Foreign object detection settings" opens, *refer to page 183*.

Adjusting the sensitivity of RockProtect:

- In the main menu -> menu Crop flow -> menu "Foreign object detection settings" set the sensitivity value of RockProtect.

When rock detection is triggered, intake and header stop immediately.

To rectify the problem:

- Reverse the intake and the header.
- Shut down and safeguard the machine, *refer to page 34*.
- Remove the foreign object from the intake.

Deactivating the rock detection (RockProtect):

- In the main menu -> menu Crop flow -> menu "Foreign object detection settings" set the status of RockProtect to "inactive".

21.18 ConstantPower

The ConstantPower load limit control controls the travelling speed of the machine depending on the diesel engine load and provides constant machine load at a lower fuel consumption. This means that the machine travels automatically quicker for a weaker crop and automatically slower for a stronger crop.

Load limit control is possible in field mode only.

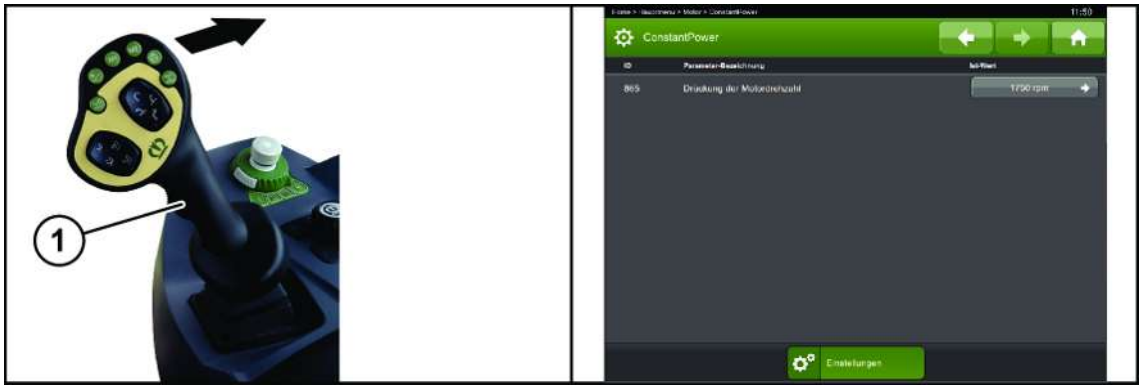

BXG000-047

To change a parameter:

- In the main menu -> Menu Engine -> Menu "ConstantPower" select a parameter and change the setting with the selection box.

To be able to activate the load limit control with the control lever:

- In the main menu -> Menu Engine -> Menu "ConstantPower" select the "Activation Constant Power" parameter and allow or do not allow activation with the selection box.

To activate the load limit control:

- Tap the control lever (1) 2x briefly to the right.

The load limit control can be deactivated by doing one of the following:

- Actuate the control lever (accelerate / decelerate).
- Turn the main mode switch to "Road mode".
- Press the brake pedal.

21.19 AutoScan

The AutoScan system controls the chop length depending on the degree of maturity of the plants which are harvested by the EasyCollect or XCollect.

Using the AutoScan sensor in the central tip of the EasyCollect or the XCollect, the system detects the degree of maturity of the maize plants and calculates the optimum chop length of the maize plants based on the values input previously for the minimum and maximum chop length and controls the speed of the pre-compression rollers accordingly.

The AutoScan system is available for maize mode only.

BXG000-048

The AutoScan system controls according to four specifications:

- The minimum chop length
- The maximum chop length
- The degree of maturity at which the automatic chop length adjustment starts.
- The degree of maturity at which the automatic chop length adjustment ends.

To change the parameters for these specifications:

▶ In the main menu -> Menu Crop flow -> Menu "AutoScan" select a parameter and change the setting with the selection box, *refer to page 182*.

To activate the AutoScan system:

▶ In the main menu -> Menu Crop flow -> Menu "AutoScan" set the chop length calculation mode (1) to "Moisture measurement", *refer to page 182*.

To deactivate the AutoScan system:

▶ In the main menu -> Menu Crop flow -> Menu "AutoScan" set the chop length calculation mode (1) to "Manual setting", *refer to page 182*.

21.20 CropControl

The CropControl system permits full yield recording and documentation of the harvested fields.

EQG002-047

INFORMATION

The CropControl system is not a measuring system under the terms of German metrology and calibration law.

> ***INFORMATION***
>
> The counter only indicates the laden weight precisely when CropControl has been calibrated for the field by means of counterweighing and when the crop on the field is homogeneous in terms of moisture. Otherwise major discrepancies may occur.

▶ To access the menu "CropControl", press in the Main menu -> Menu Crop flow -> Menu CropControl, *refer to page 194*.

On the terminal the "CropControl" (3) indicator lamp shows the current status of the counterweighing. When the indicator lamp is pressed, the menu "CropControl counterweighing" opens, *refer to page 126*.

Counterweighing and calibration

To ensure that the yield measurement is accurate, the CropControl system must be calibrated. Carry out a counterweighing for each area and type of crop.

To receive correct measured values, carry out a counterweighing after chaffing.

When counterweighing is complete and the entered weight of the counterweighing has been applied, the correction factor is recalculated.

✓ The path sensor has been calibrated, *refer to page 194*.
✓ An empty tractor/wagon combination with a known empty weight is available.
✓ The machine is stopped.

The following conditions must be met for counterweighing to ensure that the yield measurement is accurate:

- select a trailer load corresponding to the average of the total field,
- drive at average driving speed and engine load.

Perform counterweighing:

▶ Position the empty tractor/wagon combination next to the machine.

▶ To start the counterweighing, press [Starten], in the following dialogue field press [Ja] and start chopping.

▶ Load the tractor/wagon combination.

NOTICE! Ensure that all harvested chopping crops are loaded on the tractor/wagon combination.

▶ When the tractor/wagon combination has been loaded, stop the counterweighing.

▶ To stop the counterweighing, press [Stoppen].

▶ Weigh the tractor/wagon combination.

NOTICE! Ensure that no loss of crops occurs when driving to the weighing scale.

Chopping can not continue while the weighing is being weighed.

- Determine the laden weight of the tractor/wagon combination (full weight minus empty weight of the tractor/wagon combination).
- To enter the value of the laden weight as a counterweighing value, press

  0 kg and enter the value via the value input field.

➡ Counterweighing is complete. The correction factor is automatically determined from this counterweighing and from then is taken as a basis for the yield recording.

NOTICE! Delete current counterweighing.

- To delete the current counterweighing, press Löschen .

➡ The counterweighing implemented beforehand is displayed and the correction factor, determined from this counterweighing, is taken from then as a basis for the yield recording.

21.21 PowerSplit

The PowerSplit is used to increase the efficiency of the machine. The continuous engine performance is adjusted to the application conditions and therefore helps to optimise the fuel consumption.

The PowerSplit automatically switches between ECO-Power and X-Power, depending on the speed of the diesel engine.

ECO-Power automatically switches to X-Power if the engine speed drops below 1700 rpm during chopping.

X-Power automatically switches to ECO-Power when the engine speed exceeds 1700 rpm again and the engine load is above the switchover load (factory basic setting 80%).

X-Power always switches back to ECO-Power mode abruptly as soon as the engine is relieved to the necessary extent.

EQG002-064

EQG002-065

Setting the PowerSplit:

▶ In the main menu -> Menu Engine -> Submenu "Diesel engine settings" set the status of the "PowerSplit" to "Discontinuous switchover" or "Continuous switchover".

In the case of discontinuous switchover, the switchover occurs abruptly at the set rotational speed.

In the case of continuous switchover, the switchover occurs continuously and starts 100 rpm before the set rotational speed.

EQG002-066

Following activation of the PowerSplit, the indicator lamp on the terminal is lit for the engine management (1) 

or 

for the automatic switchover of the engine management.

As soon as the "ECO/X-Power" key for manual ECO-Power/X-Power switchover is pressed on the keypad, the automatic operation of the PowerSplit is interrupted and the selected engine characteristic ECO-Power or X-Power is retained.

21.22 Contents sensor system

There are 2 systems for measuring the contents in the crops:

- Measurement of moisture in crops (for "CropControl, NIR sensor including printer" version)
  The NIR sensor is installed in the spout and measures the moisture in the crops.
- Measurement of contents and moisture in crops (for "CropControl, AgriNIR online sensor including printer" version)
  The AgriNIR online sensor is installed in the spout and measures the moisture and the content of starch, protein, ADF, NDF, ash and crude fat in the crops.

The values for the moisture (using the NIR sensor) and the content of starch, protein, ADF, NDF, ash and crude fat in the crops (using the AgriNIR online sensor) are displayed on the customer counter and can also be displayed n the information area.

NOTICE

Stones in the crop flow will damage the sensor window

If fields contain a lot of stones, there is a risk that the sensor window will be scratched and the system will no longer be able to determine correct data.

- If fields contain a lot of stones, remove NIR sensor or AgriNIR online sensor and mount cover plate instead.

NIR sensor (for "CropControl, NIR sensor including printer" version)

The NIR sensor system is ready to measure only in the chopping process with adequate crop material in the crop flow.

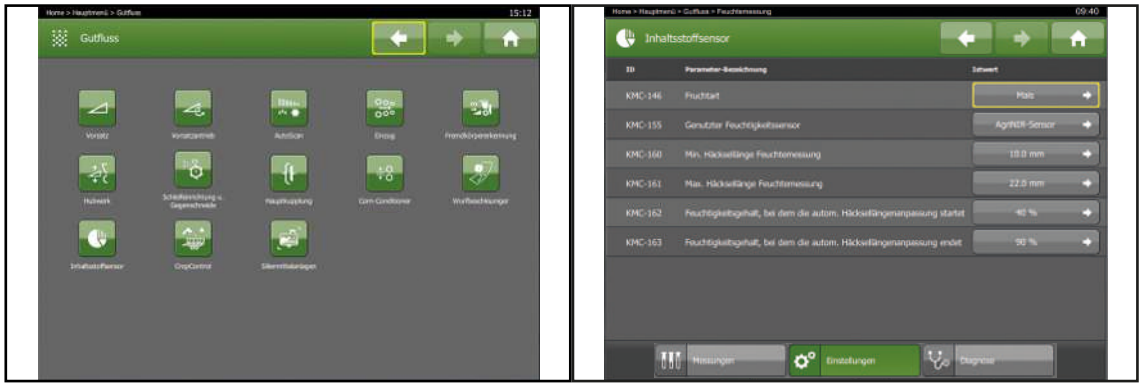

EQG003-108

- In the menu "Crop flow" -> "Contents sensor" -> "Settings" place the used moisture sensor on "NIR sensor".
- Select the type of crop.
- ➡ The NIR sensor is operational and starts taking measurements as soon as an adequate amount of crop material in the crop flow is flowing in front of the sensor.

INFORMATION

To obtain more precise measurement values with the moisture sensor (NIR sensor), carry out a basic calibration before the start of the season. In doing so, the machine is calibrated once for the crop types maize and grass.
Please contact your dealer to make an appointment at least 5 working days before the start of operations.

AgriNIR online sensor (for "CropControl, AgriNIR online sensor including printer" version)

The AgriNIR online sensor system is ready to measure only in the chopping process with adequate crop material in the crop flow.

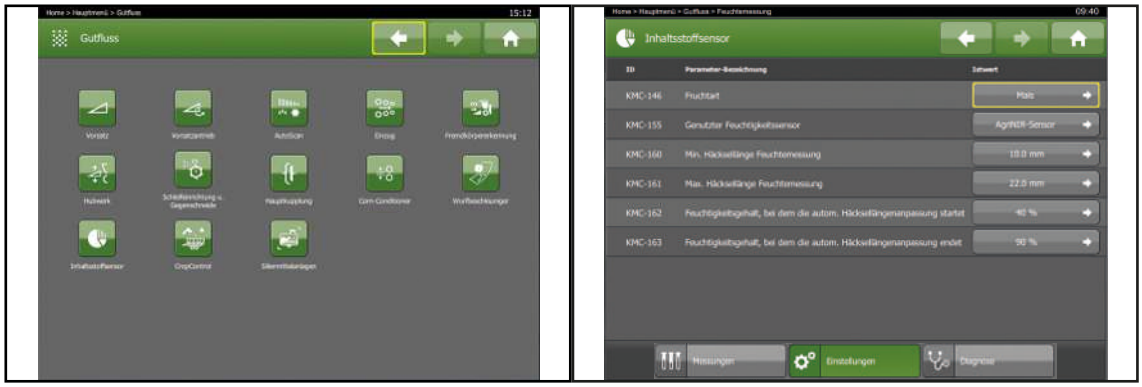

EQG003-108

- ▶ In the menu "Crop flow" -> "Contents sensor" -> "Settings" place the used moisture sensor on "AgriNIR sensor".
- ▶ Select the type of crop.
- ➡ 2 min after starting, the AgriNIR sensor is operational and starts taking measurements as soon as an adequate amount of crop material in the crop flow is flowing in front of the sensor.

The system is automatically calibrated approximately every 15 min. This occurs depending on the engine load, usually in the headland.

The values of the contents can be sent by CCI.Control Mobile to an appropriately configured Apple iPad.

21.23 Operating VariLOC chop length gearbox

NOTICE

Machine will be damaged by an unapproved use of the VariLOC chop length gearbox

If the VariLOC chop length gearbox is not used with a complete set of blades and not for corn crops, the machine may be damaged.

- ▶ Use the VariLOC chop length gearbox only with the MaxFlow chopping drum and with a complete set of blades consisting of 28 or 36 blades.
- ▶ Use the VariLOC chop length gearbox for corn crops only.

The VariLOC chop length gearbox is an additional gearbox in the belt pulley of the chopping drum. The cutting length range of the chopping drum can be increased by up to 53 % by switching the drum speed from 1,250 rpm to 800 rpm using a standard open-ended spanner. It is therefore possible to choose quickly between long and short cut.

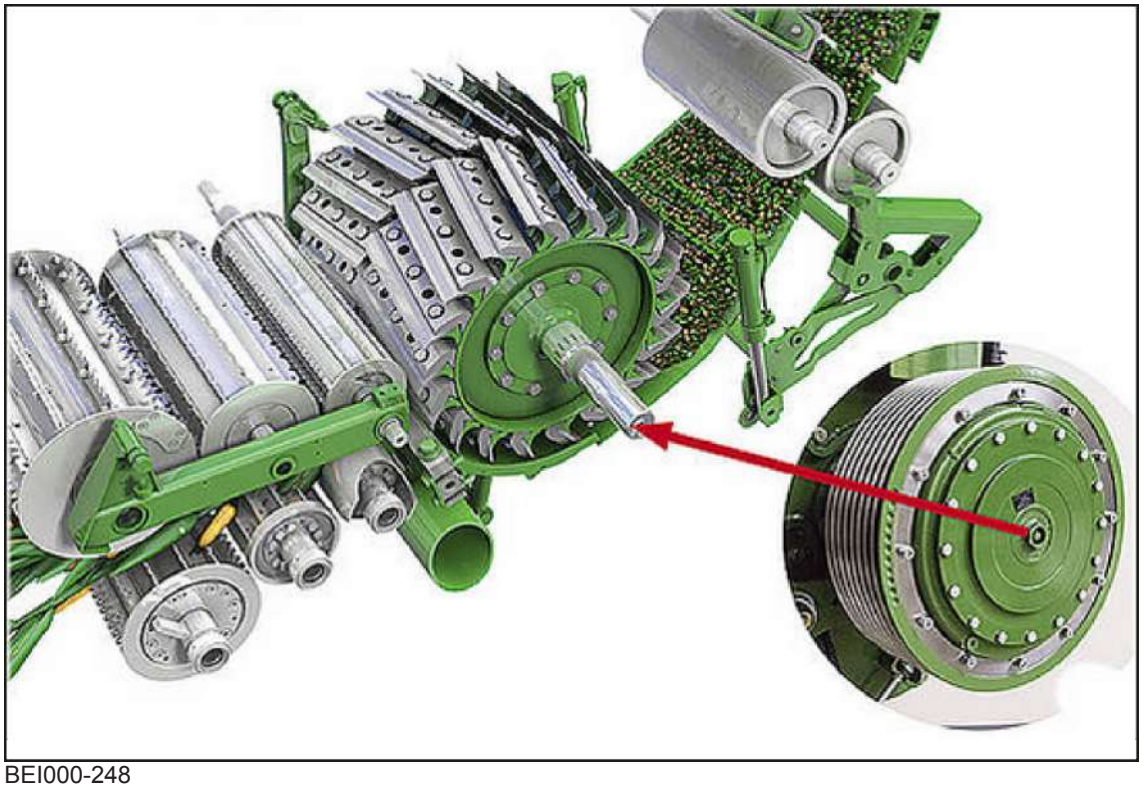

BEI000-248

Number of blades	Chop length for a non-reduction gearbox (transmission ratio 1:1)	Chop length for a reduction gearbox (transmission ratio 1:1.5)
28	4–22 mm	10-30 mm
36	3-17 mm	10-24 mm

Prerequisite

It must be known in which position the VariLOC chop length gearbox is.

If the position is not known:

- Start the machine.
- Switch on the chopping drum and leave the diesel engine running at idle speed (1,100 rpm).
- Read off the chopping drum speed on the terminal.
- Read off the gearbox position in the table for the chopping drum speed which has been read off.

Chopping drum speed	Gearbox position
660–760 rpm	Gearbox position I (transmission 1:1)
440–506 rpm	Gearbox position II (transmission 1:1.5)

21.23.1 Switching VariLOC cutting length gearbox

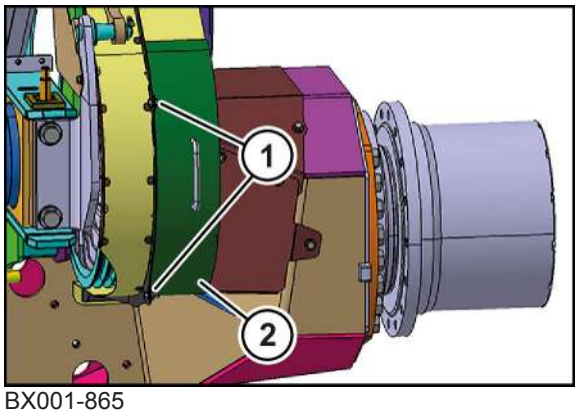

BX001-865

- Relieve the main belt, *refer to page 494*.
- Remove the screw connections (1) and remove the belt guard (2).

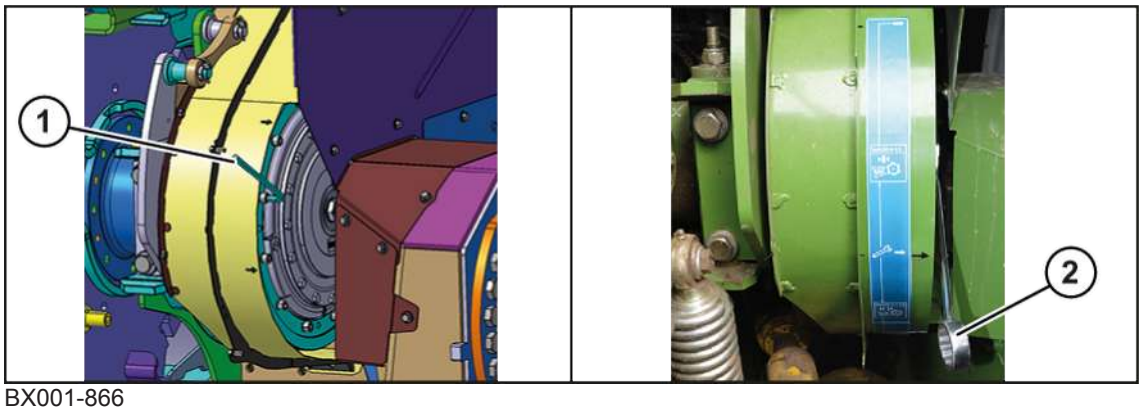

BX001-866

- Place the hexagon wrench (1) on the gearbox.
- Place the wrench (WAF 36) (2) on the nut in the centre of the gearbox so that it is situated at the height of the middle arrow.
- If the position of the wrench is not in alignment with the arrow, turn the belt pulley using the hexagon wrench until the positions are in alignment.
- Lock the cutter drum, *refer to page 495*.

NOTICE

Damage to the VariLOC chop length gearbox due to incorrect operation

If the wrench (2) is re-attached during the adjustment or is moved with excessive force or if the gearbox is operated in the neutral position, the VariLOC chop length gearbox may be damaged.

- Do not re-attach the wrench (2) during the adjustment.
- Do not move the wrench (2) with excessive force (maximum 60 Nm).
- Operate the gearbox only in gearbox stages I (transmission ratio 1:1) or II (transmission ratio 1:1.5).

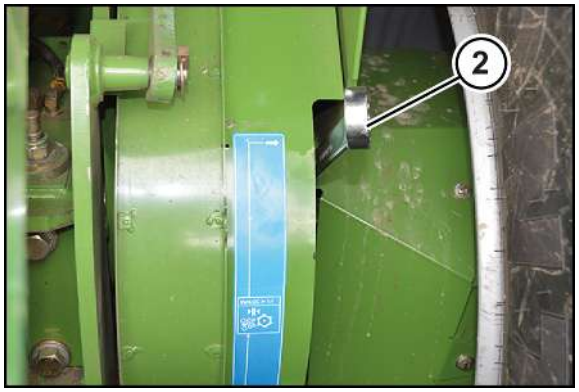

BX001-867

- Turn the wrench (2) into the required position until it is at the height of the arrow.
  - ⇨ The coupling clicks into place.
  - ⇨ The coupling does not engage correctly.
  - Turn the belt pulley using the hexagon wrench until the coupling clicks into place.
- To check the gearbox position, move the wrench (2) into the required position until resistance is felt.
  - ⇨ If the wrench (2), when released, is pressed back by spring force, the coupling is correctly engaged.
  - ⇨ It must not be possible to turn the belt pulley with the hexagon wrench, as the chopping drum is locked.
- Remove the wrench and the hexagon wrench.

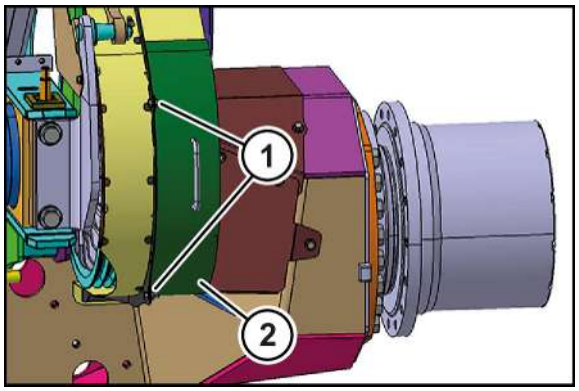

BX001-865

- Attach the belt guard (2) and secure with the screw connections (1).
- Unlock the chopping drum, *refer to page 495*.

21.23.2 VariLOC cutting length gearbox settings on the terminal

The mechanically set transmission ratio of the VariLOC cutting length gearbox must be set on the terminal.

- Automatic mode: Here the gearbox position is determined independently of the machine.
- Normal mode: Transmission ratio 1:1
- Gearbox geared-down: Transmission ratio 1:1.5

Setting the transmission ratio using automatic mode

EQG003-103

- In the main menu -> Crop flow menu -> Main coupling menu -> set the VariLOC transmission ratio (1) to "Automatic mode" (2).

EQG003-120

When the main coupling has been switched on, the machine control automatically detects the gearbox position of the VariLOC cutting length gearbox.

On the status line the "VariLOC cutting length gearbox" key (1) shows the set transmission ratio of the VariLOC cutting length gearbox must be set on the terminal.

Icon	Explanation
	VariLOC chop length gearbox transmission ratio 1:1
	VariLOC cutting length gearbox transmission ratio 1:1.5

EQG003-121

If no gearbox position of the VariLOC cutting length gearbox is detected, an information message (2) appears and the "VariLOC cutting length gearbox" key (1) is highlighted in red.

If the information message (2) is displayed:

- Manually set the transmission ratio for the VariLOC cutting length gearbox.

Setting the transmission ratio manually

After each switching process on the VariLOC cutting length gearbox, the VariLOC transmission ratio must be reset on the terminal.

EQG002-075

- In the main menu -> Crop flow menu -> Main coupling menu -> set the VariLOC transmission ratio (1) for non-reduction gearbox to "Normal mode" (2) or for reduction gearbox to "Reduction gearbox" (3).

The transmission ratio can be set alternatively in the season settings:

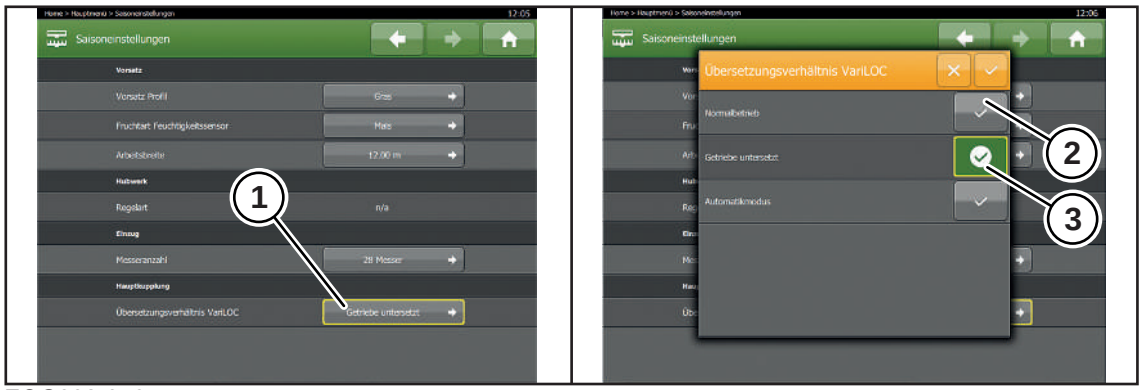

EQG002-076

- In the season settings -> VariLOC transmission ratio -> set the VariLOC transmission ratio (1) for non-reduction gearbox to "Normal mode" (2) or for reduction gearbox to "Reduction gearbox" (3).

Performing a function test

To ensure that the setting on the VariLOC chop length gearbox matches the setting on the terminal, perform a function test:

- Start the machine.
- Switch on the chopping drum and leave the diesel engine running at idle speed (1,100 rpm).
- Read off the chopping drum speed on the terminal and read off the associated gearbox position in the table.

Chopping drum speed	Gearbox position
660–760 rpm	Gearbox position I (transmission 1:1)
440–506 rpm	Gearbox position II (transmission 1:1.5)

- Check whether the gearbox position in the table matches the setting on the terminal.
  - ⇨ The setting on the terminal does not match the actual setting on the VariLOC chop length gearbox.
  - Change the setting on the VariLOC chop length gearbox or the setting on the terminal.

Information message

If the gearbox setting does not match the setting on the terminal, a message will be displayed on the terminal as soon as the main coupling is connected or the grinding process is started.

EQG002-077

If the information message is displayed:

- Change the setting on the VariLOC chop length gearbox or the setting on the terminal.

21.24 Operating auto-loading system (version with "Auto-loading system")

21.24.1 Status display of camera monitor (for "Auto-loading system" version“)

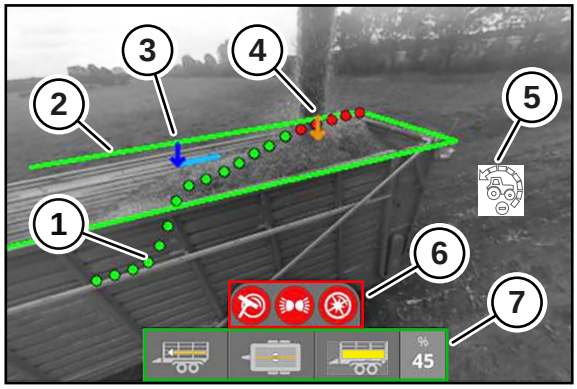

BX003-204

The keys in the status line display the current status of the corresponding parts via colours and icons.

(1) Filling level line

Symbol	Explanation
Green	The filling level in this area is not higher than the "Maximum filling level for the first pass-through" which was set with the filling strategy "from front to rear and then from rear to front" or "from rear to front and then from front to rear".
Red	The filling level in this area has reached or exceeded the "Maximum filling level".

(2) Wagon opening

Symbol	Explanation
green line	Represents the wagon opening detected by the camera.

(3) Destination

Symbol	Explanation
	Destination which the automatic system attempts to aim for.

(4) Behaviour of the spout, displayed by coloured arrow

Symbol	Explanation
	Spout optimally positioned, no change in position, automatic control active.
	Spout well positioned, flap is moved, automatic control active.
	Spout not optimal, spout is moved, flap is moved, automatic control active.
	Spout incorrectly positioned, flap is corrected very quickly, flap is corrected, automatic control active.

(5) Driving speed

Symbol	Explanation
	The driving speed of the transport vehicle must be increased. The auto-loading system cannot control the destination because the spout is reaching the end stop.
	The driving speed of the transport vehicle must be reduced. The auto-loading system cannot control the destination because the spout is reaching the end stop.

(6) Error states

Symbol	Explanation
	The camera unit glass is dirty and must be cleaned.
	It is too dark, the headlights on the machine must be switched on.
	The camera is overexposed. Switch the disruptive light source off or turn it away.

(7) Status line

Symbol	Explanation
	Filling the transport wagon from front to rear to "Maximum filling level".
	Filling the transport wagon from rear to front to "maximum filling level".
	Filling the transport wagon from front to rear to "maximum filling level in the first pass-through", then filling from rear to front to "maximum filling level".
	Filling the transport wagon from rear to front to "maximum filling level in the first pass-through", then filling from front to rear to "maximum filling level".
	The transverse movement moves the destination in the direction of the width of the transport wagon.
	The filling in the transport wagon is displayed.
% 45	The total filling level of the transport wagon is displayed as a %. The value can be seen over the entire transport wagon; at the same time individual sections may have been filled to a greater or lesser extent.

21.24.2 Activating/deactivating auto-loading system

⚠ *WARNING*

Danger to life due to automatically controlled machine

Automatically controlled machine functions must be monitored by the driver. When using automatic functions, the driver must pay particular attention to ensuring that people near the machine and along the travel path are not endangered.

- ▶ Ensure that there is nobody inside the danger zone of the machine.
- ▶ The driver must not leave the cabin during operation.
- ▶ The driver must continuously observe automatic functions which are in operation so that he can immediately resume manual control if any hazards, obstructions or interruptions occur.

✓ The Memory keys on the control lever are assigned with the "Auto-loading system" function, *refer to page 171*.

✓ The intake and the header are switched on.

✓ The spout is aligned with the centre of the transport vehicle.

✓ The machine header is located at the height of the transport vehicle drawbar.

✓ Input 3 of the camera monitor is selected.

▶ To activate the auto-loading system, press key M1 or one of the keys for Turn spout (level 2) or Raise/lower spout flap (level 2).

▶ To deactivate the auto-loading system, press key M2 or one of the keys for Turn spout (level 2) or Raise/lower spout flap (level 2).

21.24.3 Selecting filling strategy

▶ To select the required filling strategy, select the menu "Crop flow", "Auto-loading system", "Settings" on the terminal.

⇨ The transport vehicle is automatically filled.

Changing the filling strategy

The filling strategy can be changed during operation.

▶ To select the required filling strategy, select the menu "Crop flow", "Auto-loading system", "Settings" on the terminal.

⇨ The automatic system starts with the first phase of the new filling strategy. The available filling levels of the transport wagon are considered at the same time.

Manual override

If areas of the transport wagon have not been correctly filled, the automatic function can be manually overridden.

▶ Press the key "Turn spout right" (level 1) or "Turn spout left" (level 1) until the required position has been reached. After releasing the key, the automatic system resumes control.

21.24.4 Transverse movement of the destination

The transverse movement moves the destination in the direction of the width of the transport wagon.

- When the value is "10", the centre of the transport wagon is aimed for.
- When the value is "0", the transport wagon side wall facing the machine is aimed for.
- When the value is "20", the transport wagon side wall facing away from the machine is aimed for.

▶ To move the destination, press the key "Spout flap down" (level 1) or "Spout flap up" (level 1) until the required position has been reached. After releasing the key, the automatic system resumes control.

22 Settings

⚠ WARNING

Risk of injury due to non-observance of relevant safety notices

If the relevant safety notices are not observed, persons may get seriously injured or killed.

- To avoid accidents, the basic safety instructions must be read and observed, *refer to page 19*.

⚠ WARNING

Risk of injury due to non-observance of safety instructions

If the relevant safety routines are not observed, persons may be seriously injured or killed.

- The safety routines must be read and observed to avoid accidents, *refer to page 34*.

⚠ WARNING

Risk of injury from sharp chopping blades and sharp screw bars (for version with MaxFlow chopping drum)

When performing maintenance work on the chopping drum, there is a risk of the operators being injured by the sharp chopping blades or the sharp screw bars.

- When working on the chopping drum, work particularly carefully and prudently.
- Wear protective gloves when working on the chopping drum.
- Turn the chopping drum clockwise using the chopping drum turning lever only *refer to page 495* and, when the required position has been reached, lock with the locking bolt, *refer to page 495*.

22.1 Optimising crop flow

How header speed depends on chop length

If the header speed is too low, it may be that the intake rollers are pulling the crops in clumps from the header and the crop flow is stopping.

The header speeds depend to a great extent on e.g.: crops, driving speed, crop mass and degree of maturity of the crops. The speed should be set so that the crop flow is homogeneous.

If the speed of the EasyCollect or the XCollect is too high in maize mode, blockages may occur.

BXG000-026

Grass mode

- Guide value for the header speed: 400–420 rpm

Depending on the application conditions, however, a header speed of 300–600 rpm may also be advisable.

Maize mode

- Guide value for the header speed: 380–420 rpm

The header speed should be set as low as possible.

XDisc mode

- Header speed: 700 rpm

22.2 Optimising discharge capacity of machine

22.2.1 Adjusting overhang of chopping blades

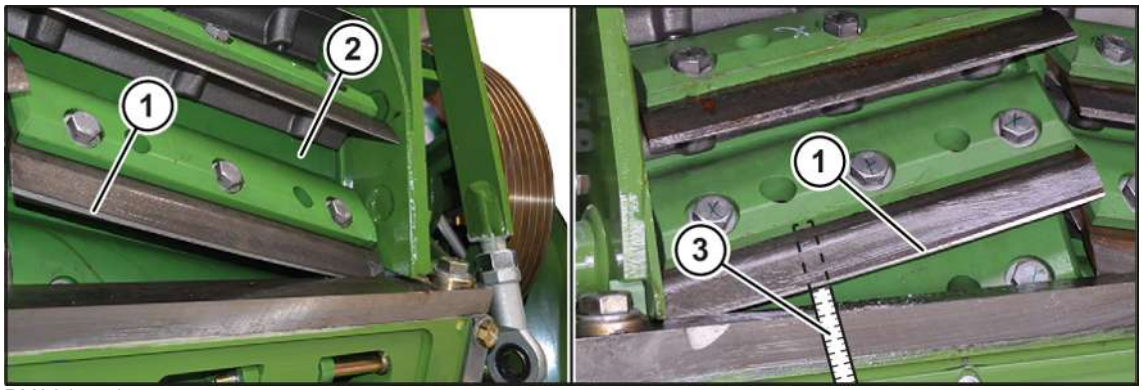

BX001-571

The discharge capacity of the machine is determined by the chopping drum among other things.

Depending on how far the chopping blade edge (1) extends beyond the chopping drum housing (2), there will be correspondingly more or less discharge capacity.

The maximum overhang of the chopping blade edge (1) relative to the chopping drum housing (2) is 89 mm (3).

During operation, the chopping blades close, thus becoming shorter. Wear leads to a drop in the volume beneath the chopping blades. The discharge capacity of the machine deteriorates due to this reduced volume.

▶ Move the chopping blades with the greatest possible overhang.

▶ Re-adjust the chopping blades more frequently, *refer to page 493*.

22.2.2 Setting drum base

INFORMATION

An incorrectly set drum base will result in an increased fuel consumption as well as an increased wear of machine components.

For an overview of the tightening torques, *refer to page 424*.

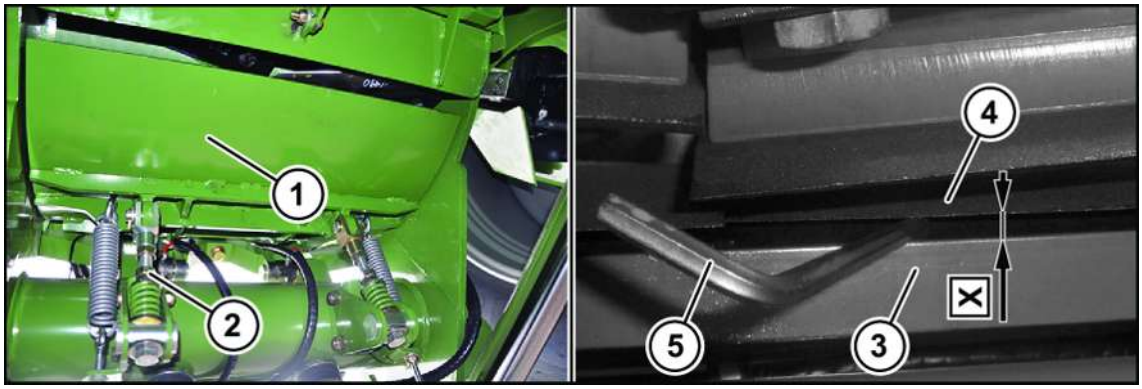

BXG000-077

Another way to improve the discharge capacity is to fine-tune the setting of the drum base (1) by adjusting the drum base (2).

The drum base is adjusted in the factory.

- The distance from the blades (4) to the drum base at the rear (3) is X=6-8 mm.
- The distance from the blades to the drum base at the front is automatically adjusted by the counterblade.

The nature of the crop (for example, a dry crop) may require readjustment of the drum base.

Setting the distance between the drum base and cutter

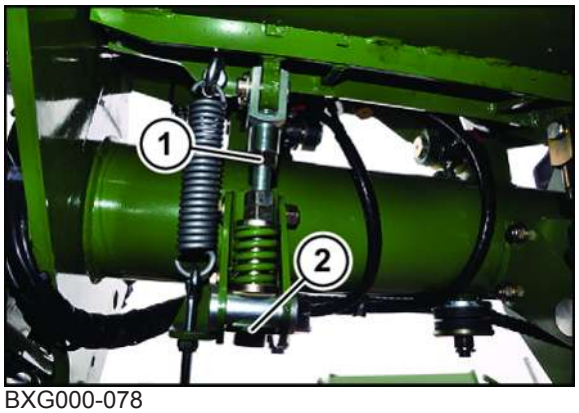

BXG000-078

▶ Adjust drum base equally on both sides.

To reduce the distance between the drum base and blades, on the right and left sides of the machine:

▶ Loosen the counter nut (1).

▶ Unscrew the screw (2) a little.

▶ Retighten the counter nut (1).

To increase the distance between the drum base and blades, on the right and left sides of the machine:

▶ Loosen the counter nut (1).

▶ Screw in the screw (2) a little

▶ Retighten the counter nut (1).

Measuring the distance

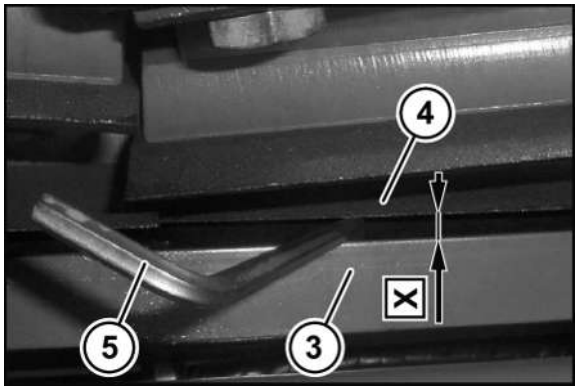

BX001-574

After adjusting the drum base, measure the distance from the drum base to the blades.

- At the rear edge of the drum base (3), use a hexagon socket to check along the entire length that the distance to the blades (4) is the dimension X = 6-8 mm (5).

Setting the spring force of the drum base

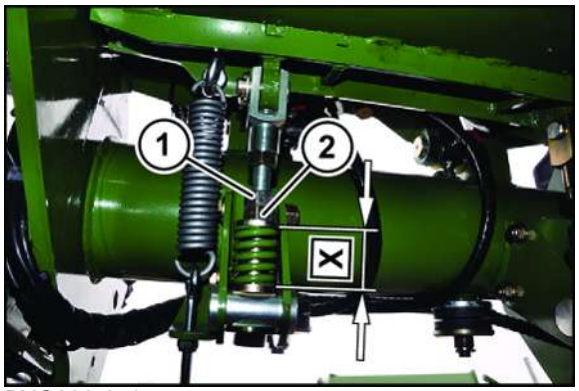

BXG000-079

The factory setting dimension of the compression spring is X = 45 mm.

To reduce the spring force of the drum base, on the right and left sides of the machine:

- Loosen the counter nut (1).
- Unscrew the nut (2) a little.
- Retighten the counter nut (1).

To increase the spring force of the drum base, on the right and left sides of the machine:

- Loosen the counter nut (1).
- Screw in the nut (2) a little.
- Retighten the counter nut (1).

Adjusting the drum base tension spring

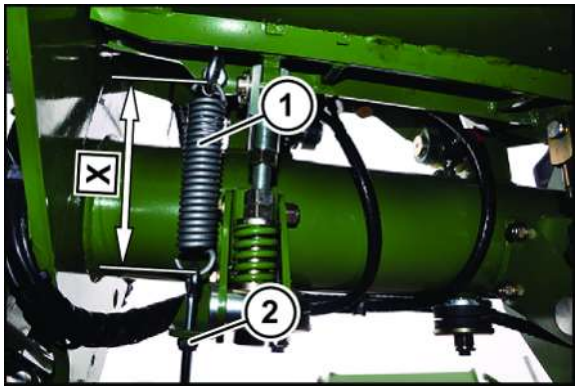

BX001-576

The tension spring (1) prevents the drum base from oscillating. The factory setting dimension of the tension spring is X = 175 mm.

To reduce the spring force:

- Loosen the nut (2), on the right and left machine sides.

To increase the spring force:

- Tighten the nut (2), on the right and left machine sides.

22.2.3 Setting rear wall of discharge accelerator

NOTICE

Increased wear and increased fuel consumption caused by incorrectly set rear wall of discharge accelerator

An incorrectly set distance between discharge accelerator (1) and rear wall (2) will result in increased fuel consumption and wear of machine components.

- Set the distance from rear wall of discharge accelerator to the discharge scoops so that the discharge capacity is optimised.

For an overview of the tightening torques, *refer to page 424*.

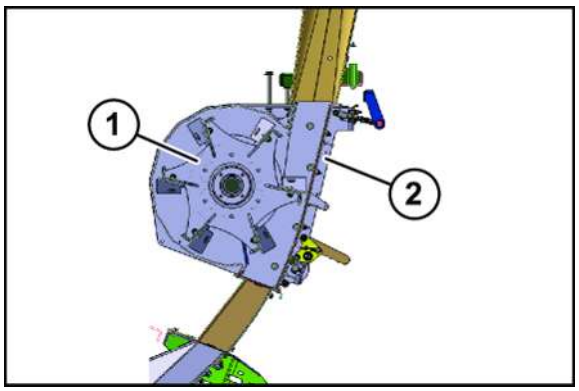

BX001-567

To reach the optimum distance between the discharge accelerator (1) and the rear wall (2), set the position of the rear wall at top via rubber buffers and at bottom by an adjustment with oblong hole.

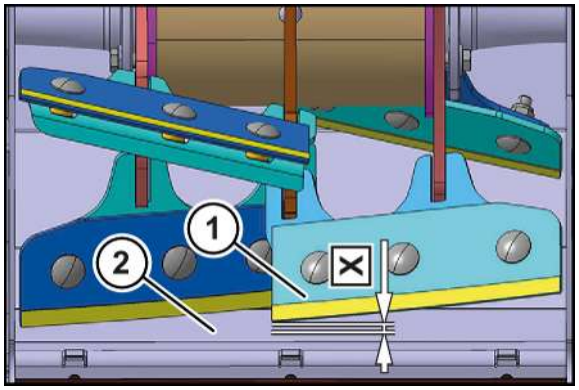

BX001-577

Reduce or increase the distance (X) between the rear wall (1) and the discharge scoops (2) to improve or deteriorate the discharge capacity depending on the crops.

Default factory setting:

- Grass: X = 3-4 mm
- Maize: X = 3-4 mm

Preparing forage harvester for setting the gap between the discharge scoops and rear wall

✓ The machine is shut down and secured, *refer to page 34*.

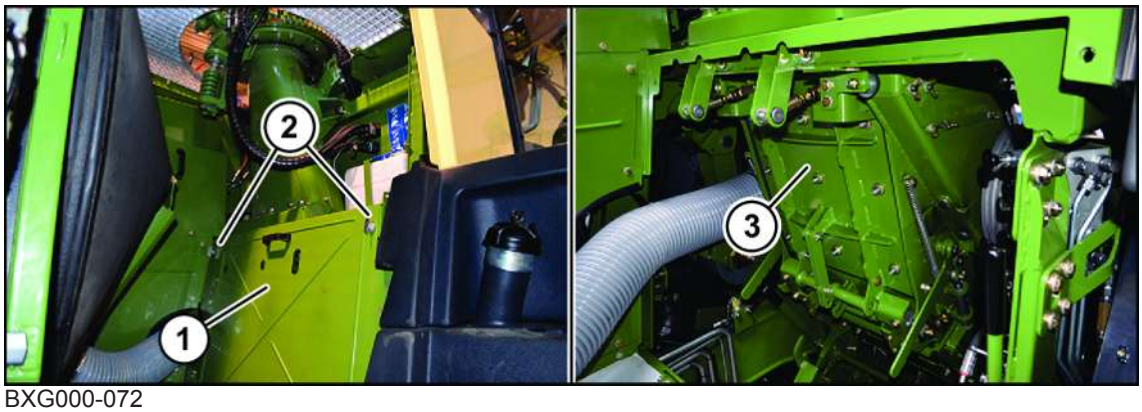

BXG000-072

To access the setting elements of the discharge accelerator rear wall (3):

▶ Loosen the quarter turn fasteners (2) and remove the crop flow cover (1).

Measuring the distance between the discharge scoops and rear wall

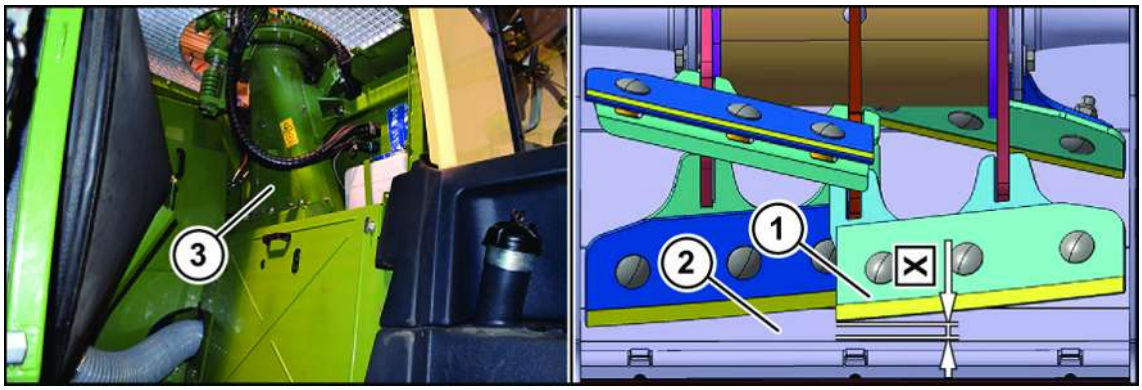

BXG000-074

To measure the distance between rear wall and discharge scoops:

- Remove the channel support cover (3).

WARNING! Risk of crushing from rotating discharge accelerator rotor. If the discharge accelerator rotor is rotated by hand, there is a risk of being crushed between the discharge accelerator scoops and the housing, the rear wall and the scraper. As a result, people may be injured. Ensure that there is nobody inside the danger zone.

- Rotate the discharge accelerator rotor by hand until the lowest gap X is reached.
- Measure the gap X between the discharge accelerator scoops (1) and rear wall (2).

Adjusting the distance of rear wall of discharge accelerator bottom

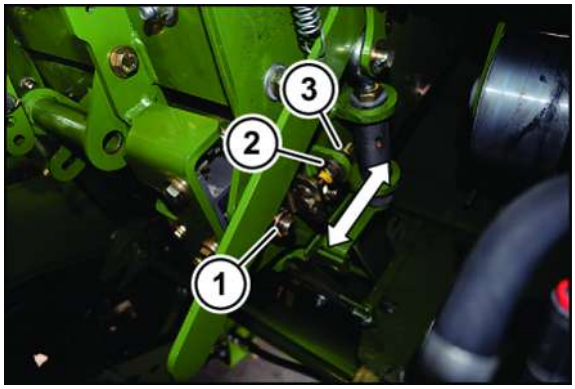

BX001-580

- Adjust the rear wall of discharge accelerator evenly on both sides.

To set the rear wall of discharge accelerator at bottom, on right-hand and left-hand machine side:

- Loosen the nut (1).
- Loosen the counter nut (2).
- Set the distance of rear wall of discharge accelerator by adjusting the nut (3).
- Tighten the counter nut (2) again.
- Tighten the nut (1) again.
- Measure the distance of the discharge scoops to the rear wall and readjust it, if necessary.
- Check the transition grass channel/corn conditioner - discharge accelerator,*refer to page 408*.

Checking transition between grass channel/corn conditioner – discharge accelerator

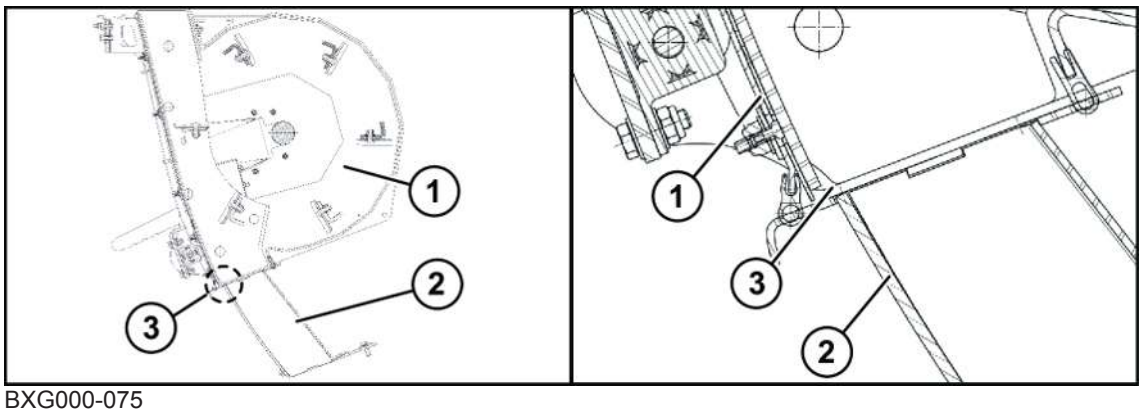

BXG000-075

At the transition between the grass channel/corn conditioner (2) and the discharge accelerator (1) the crop flow must not form a retaining edge. The chopping crops may back up on a retaining edge and cause crop flow problems or crop blockages.

- When setting the rear wall of discharge accelerator, ensure that there is no retaining edge at the transition (3) between the grass channel/corn conditioner (2) and the discharge accelerator (1).
- Remove the cover from the channel support.

WARNING! Crush hazard from rotating discharge accelerator. If the discharge accelerator is rotated by hand, there is a risk of being crushed between the discharge accelerator scoops and the housing, the rear wall and the scraper. As a result, people may be injured. Ensure that there is nobody inside the danger zone.

- Check the transition (3); if required, turn the discharge accelerator by hand.
  - ⇨ There is a retaining edge.
- Check the installation position and the lock of the grass channel/corn conditioner.
- Reset the distance of the lower rear wall of discharge accelerator, *refer to page 408*.

Setting the distance of the upper rear wall of discharge accelerator

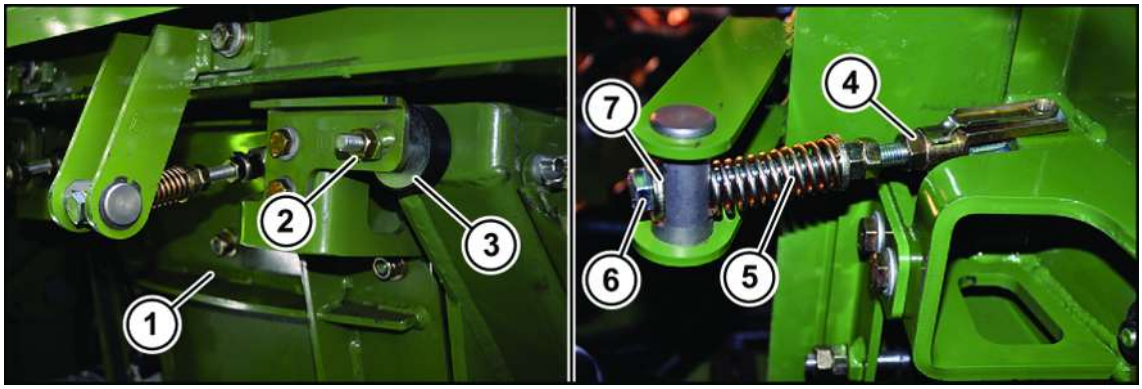

BX001-582

To increase the distance between the discharge accelerator rear wall (1) and the discharge scoops, on the right and left sides of the machine:

- Loosen the counter nut (2) on the rubber buffer (3).
- Unscrew the rubber buffer on both sides by the same dimension.
- Retighten the counter nut (2).
- Loosen the counter nut (4) of the spring (5).
- Loosen the screw (6) until the disc (7) can only just be moved by hand.
- Retighten the counter nut (4).
- Check the transition between discharge accelerator and channel support, *refer to page 410*.
- Reset the spring force of the discharge accelerator rear wall, *refer to page 410*.

To reduce the distance between the discharge accelerator rear wall (1) and the discharge scoops, on the right and left sides of the machine:

- Loosen the counter nut (4) of the spring (5).
- Loosen the screw (6) by several turns.
- Loosen the counter nut (2) on the rubber buffer (3).
- Screw in the rubber buffer on both sides by the same dimension.
- Retighten the counter nut (2).

- Screw in the screw (6) until the disc (7) can only just be moved by hand.
- Retighten the counter nut (4).
- Check the transition between discharge accelerator and channel support, *refer to page 410*.
- Reset the spring force of the discharge accelerator rear wall, *refer to page 410*.

Checking transition between discharge accelerator and channel support

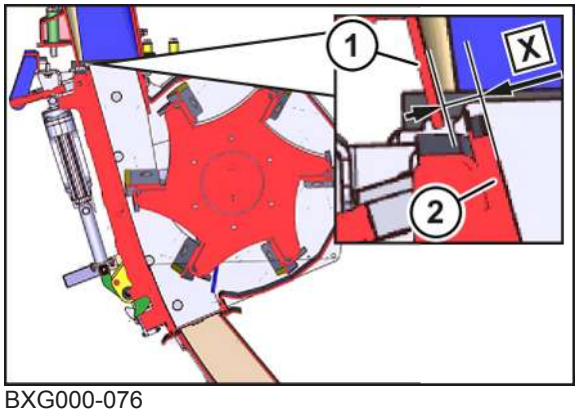

BXG000-076

At the transition between the discharge accelerator (1) and the channel support there must be no retaining edge in the crop flow, even when the rear wall of discharge accelerator has completely sprung back. The chopping crops may back up on a retaining edge and cause crop flow problems or crop blockages.

Factory basic setting:

- X=15-18 mm
- When setting the rear wall of discharge accelerator, ensure that there is no retaining edge at the transition between the rear wall of discharge accelerator (2) and the channel support (1).
- Remove the cover from the channel support.
- Check the transition between the rear wall of discharge accelerator (2) and the channel support (1) when the rear wall of discharge accelerator (2) has completely sprung back.
  - ⇨ There is a retaining edge. The rear wall of discharge accelerator (2) is located behind the channel support (1).
- Setting the distance of the upper rear wall of discharge accelerator, *refer to page 409*.

Setting the spring force of the discharge accelerator rear wall

The springs enable the rear wall to move easily backwards if the crop flow is irregular (Varistream effect).

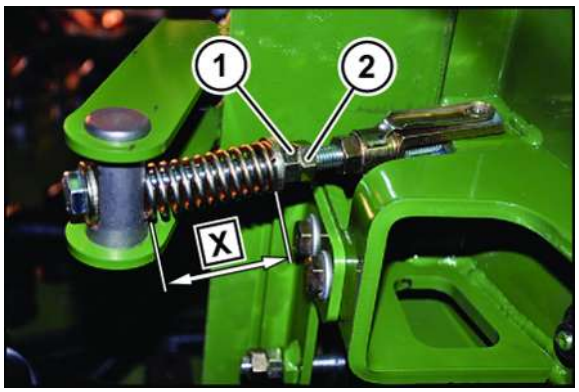

BX001-583

- Set the spring force of the discharge accelerator rear wall equally on both sides.

The factory setting dimension of the compression spring is X=55 mm.

To reduce the spring force, on the right and left sides of the machine:

- Loosen the counter nut (2).
- Unscrew the adjusting nut (1) slightly.
- Retighten the counter nut again.

To increase the spring force, on the right and left sides of the machine:

- Loosen the counter nut (2).
- Screw in the adjusting nut (1) slightly.
- Retighten the counter nut on both sides again.

After setting the spring force:

- When the discharge accelerator rear wall has completely sprung back, check whether the channel support has a retaining edge, *refer to page 410*.

22.2.4 Setting retaining bolt of grass channel/corn conditioner locking

For an overview of the tightening torques, *refer to page 424*.

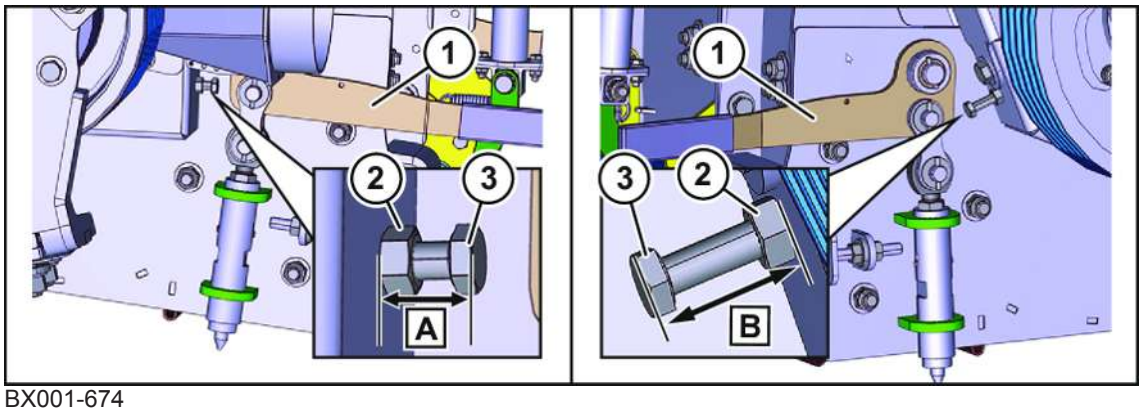

BX001-674

To ensure that the retaining bolts are correctly locked, the lever (1) must not be actuated beyond its dead point. To do this, set the stop screw (3) of the lever (1) to the dimension A= 21 mm (left) and B= 35 mm (right).

- Check dimensions “A” (left) and “B” (right) and reset the stop screw (3), if necessary.
- Loosen the counter nut (2) and set the screw (3) to dimension A = 21 mm (left) and B= 35 mm (right).
- Tighten the counter nut (2).

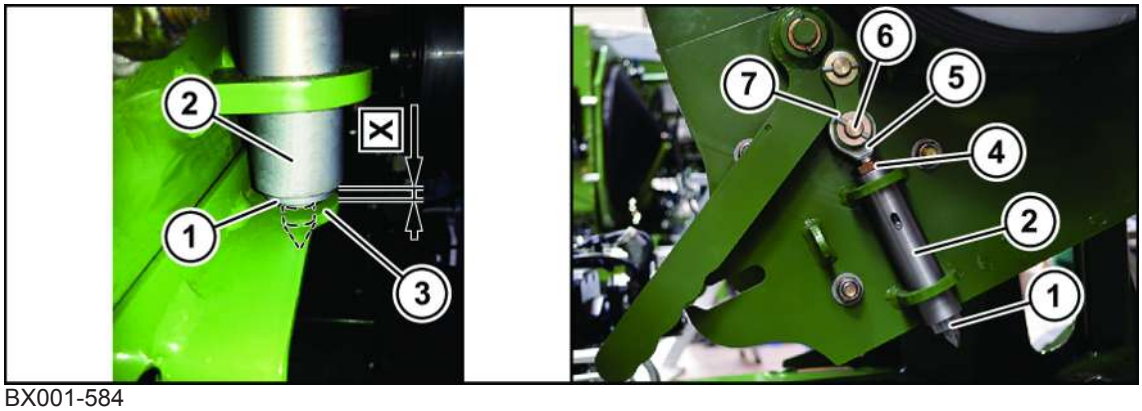

BX001-584

The retaining bolt (1) is spring-mounted in an outer tube (2). If the dimension X is not 4-6 mm after locking the grass channel (3) or the corn conditioner, the retaining bolt must be adjusted.

To set the retaining bolt (1), on both sides of the grass channel/corn conditioner:

- Dismount the cotter pin (7) and the bolt (6).
- Loosen the counter nut (4).
- Set the threaded piece (5).
- Tighten the counter nut (4).
- Mount the cotter pin (7) and the bolt (6).
- Check dimension X.

If the dimension is X = 4-6 mm, the setting is correct.

If the dimension is not X = 4-6 mm, the retaining bolt must be adjusted again.

22.3 Setting deflector sheet on the corn conditioner

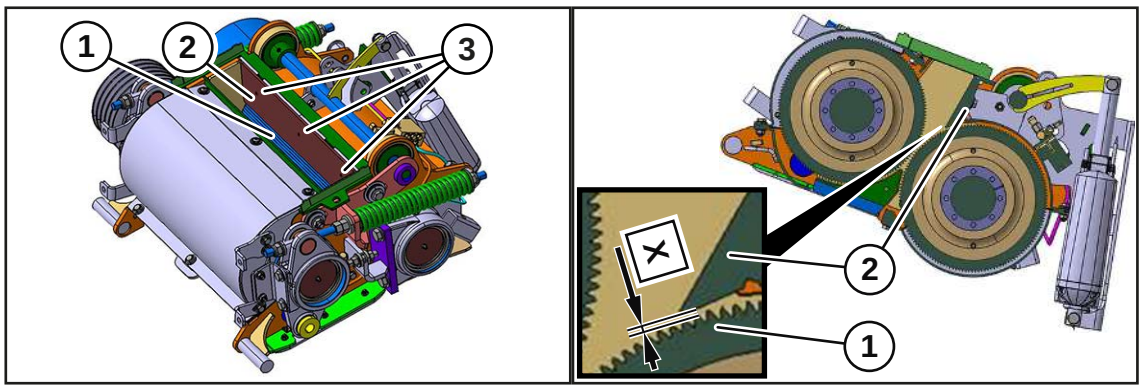

BX002-063 / BX002-064

For an overview of the tightening torques, *refer to page 424*.

To prevent part of the chopped material from flowing around the roller (1) of the corn conditioner, the deflector sheet (2) can be adjusted as required.

To adjust the deflector sheet (2):

- Loosen the screws (3).
- Move the deflector sheet (2) until the dimension between the roller (1) and the deflector sheet (2) is X=2 mm over the entire length.
- Tighten the screws (3).

23 Maintenance - General Information

⚠ WARNING

Risk of injury due to non-observance of relevant safety instructions

If the relevant safety instructions are not observed, persons may be seriously injured or killed.

- ▶ To avoid accidents, the relevant safety instructions must be read and observed, *refer to page 19*.

⚠ WARNING

Risk of injury due to non-observance of safety instructions

If the relevant safety routines are not observed, persons may be seriously injured or killed.

- ▶ The safety routines must be read and observed to avoid accidents, *refer to page 34*.

⚠ WARNING

Risk of injury during trial run of the machine

If a trial run is conducted after repairs, maintenance, cleaning work or technical adjustments, the machine could respond unpredictably. As a result, people may be seriously injured or killed.

- ✓ The machine is in working position.
- ▶ Make certain there are no persons in the danger zone when the engine and header drive start.
- ▶ Start the trial run of the machine from the driver's seat only.

NOTICE

Damage to the machine due to incorrectly performed or unfinished maintenance work

If maintenance work is not carried out by qualified personnel, the machine could be damaged. A qualified service centre has the required technical knowledge, qualifications and tools to perform the required work on the machine in a proper manner. This applies in particular to safety-relevant work.

- ▶ Always have the following work performed by a qualified specialist workshop:
  - Safety-relevant work
  - Service and maintenance work
  -Repair work
  - Modifications as well as installations and conversions
  - Working on electronic parts
- ▶ This chapter does not list all the necessary maintenance work of the engine. It is necessary to observe the maintenance instructions of engine manufacturer. The maintenance instructions are available at each qualified specialist workshop having access to the Workshop Information System (WIS) or after having participated in motor training at KRONE premises.

23.1 Maintenance table

23.1.1 Maintenance – Before the season

Hydraulic system	
Check hydraulic hoses	*refer to page 528*
Check hydraulic tank oil level	*refer to page 526*

Brake	
Check service brake function	*refer to page 460* *refer to page 84*
Check function of the trailer brake (for "Trailer brake system" version)	*refer to page 85*

Components for crop flow	
Check the conveyor bars of the pre-compression roller	*refer to page 509*
Check the tension springs of the intake unit	*refer to page 513*
Check counterblade for damage and wear	*refer to page 506*
Check chopping blade for damage and wear	*refer to page 493*
Check corn conditioner for wear	*refer to page 520*
Check discharge scoops for damage and wear	*refer to page 521*
Check the scrapers of the discharge accelerator	*refer to page 522*
Check grinding stone for damage	*refer to page 488*

Gearbox	
Transfer gearbox, check oil level	*refer to page 530*
Check oil level on intermediate gearbox	*refer to page 530*
Intake intermediate gearbox, check oil level	*refer to page 532*
Bottom roller gearbox, check oil level	*refer to page 533*
Top roller gearbox, check oil level	*refer to page 534*
Wheel hub gearbox front/rear, check oil level	*refer to page 535*
Rotary drive gearbox spout, check oil level	*refer to page 538*
Check oil level of the fan gearbox	*refer to page 539*
Check oil level of the engine output	*refer to page 540*
VariLOC cutting length gearbox, check oil level	*refer to page 541*

Engine	
Check engine oil level	*refer to page 431*
Check coolant level	*refer to page 442*
Check the coolant hoses for leaks	*refer to page 442*

Engine	
Clean/replace air filter	*refer to page 446*
Check that detachable connecting elements (screws, hose clamps, pipe connections, hoses) are tight and retighten if required	*refer to page 444*
Take measures to start up and start the engine following shutdown of the engine.	*refer to page 447*

Air conditioning/heating	
Change receiver-dryer unit	To be performed by an authorised technician only

General maintenance work	
Check all wear plates	*refer to page 515*
Check all screws/nuts to make certain they are tight and retighten them, if necessary	
Lubricate the machine according to the lubrication chart	*refer to page 552*
Check the lighting	

Electrical system	
Clean battery	*refer to page 545*
Check the charge state of the batteries and recharge, if required.	*refer to page 545*
Check the electrical connection cables and, if necessary, have them repaired or changed by a KRONE service partner	

Wheels / tyres	
Visually inspect tyres for cuts and breaks	*refer to page 463*
Check tyre pressure	*refer to page 463*

Fire extinguisher	
Maintain fire extinguisher	*refer to page 466*

23.1.2 Maintenance – After the season

General maintenance work	
Clean the machine	*refer to page 466*
Park the machine in a weatherproof and dry location which is not in close proximity to corrosive substances	
Set the tyre pressure to the maximum permitted value	*refer to page 463*
Protect the tyres against external influences such as oil, grease or direct sunlight	

General maintenance work	
Lubricate the machine according to the lubrication chart. Then leave the machine running until a grease circle has formed on the outside of the bearing positions. Do not wipe off this grease as it offers additional protection against moisture.	*refer to page 551*
Grease the threads of the setting screws	
Release the springs	
Grease the uncoated piston rods of all hydraulic cylinders and insert as far as possible	
Lightly coat with oil all those lever joints and bearing positions which cannot be lubricated	
Touch up damaged paint and preserve uncoated areas with rust protection agent	
Check that all moveable components move freely. If required, dismount, clean, grease and remount.	
Lubricating universal shafts	*refer to page 551*
Lower the intake as far as possible	
Remove the kraftband from the corn conditioner	
Remove the corn conditioner, clean it thoroughly and coat with grease or a preservative paint to protect it against corrosion	
After cleaning and preserving, reinstall the corn conditioner and run the diesel engine for 5 min to ensure that any water is pressed out of the bearings.	
For version with "silage additives unit": Fill the silage additives tank with a biodegradable frost protection agent and allow the system to run for 10 min.	
Drain condensation water out of the compressed air tanks of the compressed air brake	*refer to page 449*
Take measures to shutdown the diesel engine.	*refer to page 447*

Rear axle for front wheel drive	
Check hub bearings for wear and play	*refer to page 458*

23.1.3 Maintenance - once after 1 hour

Tyres	
Tighten the wheel nuts on front wheels/rear wheels	*refer to page 464*

23.1.4 Maintenance - once after 4 hours

Drive belt	
Check belt tension of all drive belts	*refer to page 461*

23.1.5 Maintenance - once after 10 hours

Components for crop flow	
Tighten fastening screws of chopping blades	*refer to page 493*
Tighten fastening screws of discharge scoops	*refer to page 521*

Tighten the screws	
Check the fastening screws of the steering cylinder	*refer to page 457*
Check the fastening screws of the track rod	

Central lubrication	
Check lines for firm attachment	*refer to page 560*

23.1.6 Maintenance – 6 times after every 10 hours

Tyres	
Tighten the wheel nuts on front wheels/rear wheels	*refer to page 464*

23.1.7 Maintenance - Once after 50 hours

Oil change in gearbox	
Wheel hub gearbox front/rear	*refer to page 535*

Engine	
Check coolant hoses for leaks	*refer to page 444*

Fuel system (engine)	
Check fuel lines for leaks	*refer to page 445*
Check detachable connecting elements (screws, hose clamps, pipe connections, hoses) for firm attachment and retighten them, if necessary	

Cooling system (engine)	
Check the concentration of anticorrosion agent and antifreeze	*refer to page 441*
Check coolant hoses for leaks	*refer to page 444*
Check detachable connecting elements (screws, hose clamps, pipe connections, hoses) for firm attachment and retighten them, if necessary	

23.1.8 Maintenance – Once after 1,000 km

Rear axle for front wheel drive	
Check hub bearings for wear and play	*refer to page 458*

23.1.9 Maintenance - Every 10 hours, but at least once a day

Hydraulic system	
Check hydraulic tank oil level	*refer to page 526*
Check the hydraulic hoses for leaks and, if necessary, have them replaced by a KRONE service partner.	*refer to page 528*

Brake	
Check service brake function	*refer to page 460* *refer to page 84*
Check function of the trailer brake (for "Trailer brake system" version)	*refer to page 85*

Crop flow components	
Check counterblade (damage, wear)	*refer to page 506*
Check chopping blades (damage, wear)	*refer to page 493*
Check discharge scoops (damage, wear)	*refer to page 521*
Check grinding stone (damage)	*refer to page 488*

Engine	
Clean engine compartment	*refer to page 430*
Visual inspection of the entire engine piping for condition, attachment, leak tightness, soiling and damage.	*refer to page 444*
Check engine oil level	*refer to page 431*

Fuel system (engine)	
Drain condensation water from fuel prefilter by using the water separator	*refer to page 433*
Drain condensation water from the fuel filter (on the engine side)	By qualified specialist workshop only. See engine operating instructions, “Venting and Draining the Fuel System”.
Check fuel filling level	Display in the terminal, fill up fuel*refer to page 439*
Check urea filling level	Display in the terminal, fill up urea*refer to page 440*

Cooling system (engine)	
Check coolant level	*refer to page 442*
Clean cooler, cooler compartment and sieve drum	*refer to page 455*
Clean/replace air filter	*refer to page 446*

Cabin	
Clean fresh air filter	*refer to page 454*
Top up windscreen washer system	*refer to page 451*
Check warning lights	*refer to page 344*
Check lighting function	*refer to page 85*

Air conditioning/heating	
Clean capacitor	*refer to page 455*

Central lubrication	
Check filling level of reservoir	*refer to page 567*

General maintenance work	
Clean the entire machine	*refer to page 466*
Check the fire extinguishers	*refer to page 466*

Camera (for "Auto-loading system" version)	
Clean the camera glass	

Contents sensor (for "CropControl, NIR sensor including printer" version and for "CropControl, AgriNIR online sensor including printer“ version)	
Clean disc of the contents sensor	
Ensure that the disc of the contents sensor is not damaged. If required, replace.	

Silage additives unit	
Clean silage additives unit	*refer to page 366*

Tyres	
Visually check tyres for cuts and breaks	*refer to page 463*

Rear axle for front wheel drive	
Check hub covers for damage and that they are secure	*refer to page 458*

23.1.10 Maintenance - weekly

Oil level check gearbox	
Wheel hub gearbox front/rear	*refer to page 535*

Tyre	
Check tyre pressure	*refer to page 463*

Compressor unit	
Drain condensation water from compressed air storage tank	*refer to page 449*

23.1.11 Maintenance - Every 50 hours

Gearbox	
Transfer gearbox, check oil level	*refer to page 530*
Check oil level on intermediate gearbox	*refer to page 530*
Intake intermediate gearbox, check oil level	*refer to page 532*
Bottom roller gearbox, check oil level	*refer to page 533*
Top roller gearbox, check oil level	*refer to page 534*
Wheel hub gearbox front/rear, check oil level	*refer to page 535*
Rotary drive gearbox spout, check oil level	*refer to page 538*
Check oil level of the fan gearbox	*refer to page 539*
Check oil level of the engine output	*refer to page 540*
VariLOC cutting length gearbox, check oil level	*refer to page 541*

Wheels / tyres	
Retighten wheel nuts on the front/rear wheels	*refer to page 464*
Check tyre pressure	*refer to page 463*

23.1.12 Maintenance - every 100 hours

Cabin	
Clean circulation filter	*refer to page 455*

Air conditioning/heating	
Check refrigerant condition and filling quantity (dryer)	*refer to page 453*

General maintenance work	
Perform manual lubrication according to lubrication chart	*refer to page 551*

23.1.13 Maintenance - every 250 hours

Crop flow components	
Check scraper of flat roller (wear, distance dimension)	*refer to page 510*
Check scraper of discharge accelerator	*refer to page 521*

Drive belts	
Check main drive belt	*refer to page 461*
Check sieve drum belt	
Check corn conditioner belts	

Tighten screws	
Check the screws of the steering cylinders	*refer to page 457*
Check the screws of the track rod.	

Air conditioning/heating	
Check collector	*refer to page 453*

General maintenance work	
Check wear plate of tow coupling	*refer to page 464*
Check coupling bolt of tow coupling	
Check the turning capacity of the coupling jaw	
Perform manual lubrication according to lubrication chart	*refer to page 551*

Fire extinguisher	
Maintain fire extinguisher	*refer to page 466*

23.1.14 Maintenance - Every 500 hours

Hydraulic system	
Change hydraulic oil in the hydraulic oil tank	*refer to page 526*
Change return suction filter	
Change hydraulic oil filter (high-pressure filter) in the working hydraulics	*refer to page 528*

Oil change in gearbox	
Wheel hub gearbox front/rear	*refer to page 535*

Fuel system (engine)	
Drain condensation water from fuel prefilter by using the water separator	*refer to page 433*
Change fuel prefilter with water separator	*refer to page 433*
Check fuel lines for leaks	*refer to page 445*
Check detachable connecting elements (screws, hose clamps, pipe unions, hoses) for firm attachment	

Cooling system (engine)	
Check the concentration of anticorrosion agent and antifreeze	*refer to page 441*
Check pipework in the air intake and charge air for leaks	*refer to page 444*
Check coolant hoses for leaks	
Check detachable connecting elements (screws, hose clamps, pipe unions, hoses) for firm attachment	

Urea system (engine)	
Change urea filter	*refer to page 434*

Electrical system	
Check the state of the control unit bearing.	To be performed by an authorised technician only.

Drive belt	
Check the belt tension of all drive belts.	*refer to page 461*

Pulleys	
Check all pulleys	*refer to page 461*

Cabin	
Replace the fresh air filter.	*refer to page 454*
Replace circulation filter.	*refer to page 455*
Check the functions of the driver's seat.	*refer to page 219*

General maintenance work	
Check fire extinguisher	*refer to page 58*

Electrical system	
Clean battery	*refer to page 545*

Brake	
Check service brake function	*refer to page 460* *refer to page 84*
Check function of the trailer brake (for "Trailer brake system" version)	*refer to page 85*

Rear axle for front wheel drive	
Check hub bearings for wear and play	*refer to page 458*

23.1.15 Maintenance - every 1,000 hours but at least at the end of the season

Hydraulic system	
Change oil filter of gearbox oil cooling	*refer to page 530*,

Oil change in gearbox	
Transfer gearbox	*refer to page 530*
Intermediate gearbox	*refer to page 530*
Intermediate gearbox intake	*refer to page 532*
Lower roller gearbox	*refer to page 533*
Upper roller gearbox	*refer to page 534*
Wheel hub gearbox front/rear	*refer to page 535*
Rotary drive gearbox spout	*refer to page 538*
Fan gearbox	*refer to page 539*
Power take-off gear	*refer to page 540*
VariLOC gearbox	*refer to page 541*

Engine	
Check all lines, hoses and electric cables for chafe marks	

Cooling system (engine)	
Clean/replace air filter	*refer to page 446*

23.1.16 Maintenance - every 3 years

Cooling system (engine)	
Change coolant	*refer to page 441* *refer to page 456*
Replace safety cartridge of air filter	*refer to page 447*

23.1.17 Maintenance - as required

Hydraulic system	
Change return suction filter	*refer to page 526*
Change hydraulic oil filter (high-pressure filter) of work hydraulics	*refer to page 528*

Brake	
Check service brake function	*refer to page 460* *refer to page 84*
Check function of the trailer brake (for "Trailer brake system" version)	*refer to page 85*

Crop flow components	
Check the conveyor bars of the pre-compression roller	*refer to page 509*
Check tension springs of intake unit	*refer to page 513*
Check counterblade (damage, wear)	*refer to page 506*
Check chopping blades (damage, wear)	*refer to page 493*
Check corn conditioner (wear)	*refer to page 520*
Check discharge scoops (damage, wear)	*refer to page 521*
Check scraper of discharge accelerator	*refer to page 521*
Check grinding stone (damage)	*refer to page 489*

Engine	
Clean engine compartment.	*refer to page 431*
Clean cooler, cooler compartment and sieve drum	*refer to page 455*

Fuel system (engine)	
Drain condensation water from fuel prefilter by using the water separator	*refer to page 433*
Drain condensation water from the fuel filter (on the engine side)	By qualified specialist workshop only. See engine operating instructions, “Venting and Draining the Fuel System”.
Vent fuel system, fuel prefilter	*refer to page 441*

Cooling system (engine)	
Check the coolant hoses for leaks.	*refer to page 444*
Check that detachable connecting elements (screws, hose clamps, pipe connections, hoses) are tight and retighten if required	
Clean/replace air filter	*refer to page 446*
Replace safety cartridge air filter	*refer to page 447*

Drive belts	
Change main belt	*refer to page 461*
Replace sieve drum drive	
Change corn conditioner belt	

Cabin	
Clean fresh air filter	*refer to page 454*
Clean circulation filter	*refer to page 455*
Top up windscreen washer system	*refer to page 451*

Air conditioning/heating	
Clean capacitor	*refer to page 455*

Central lubrication	
Check filling level of reservoir	*refer to page 567*

General maintenance work	
Check all wear plates	*refer to page 515*

Electrical system	
Clean battery	*refer to page 545*

23.2 Tightening torques

Deviating tightening torques

All screw connections must in general be tightened with the listed tightening torques following. Deviations from the tables are marked accordingly.

Metric thread screws with control thread

INFORMATION

The table does not apply to countersunk screws with hexagon socket in case the countersunk screw is tightened via hexagon socket.

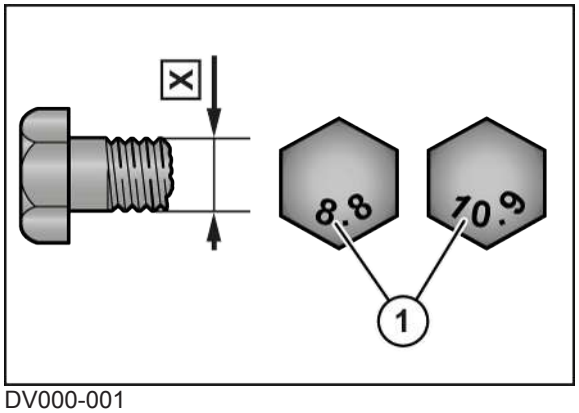

DV000-001

X Thread size 1 Strength class on screw head

X	Strength class			
	5.6	8.8	10.9	12.9
	Tightening torque (Nm)			
M4		3.0	4.4	5.1
M5		5.9	8.7	10
M6		10	15	18
M8		25	36	43
M10	29	49	72	84
M12	42	85	125	145
M14		135	200	235
M16		210	310	365
M20		425	610	710
M22		571	832	972
M24		730	1,050	1,220
M27		1,100	1,550	1,800
M30		1,450	2,100	2,450

Metric thread screws with fine thread

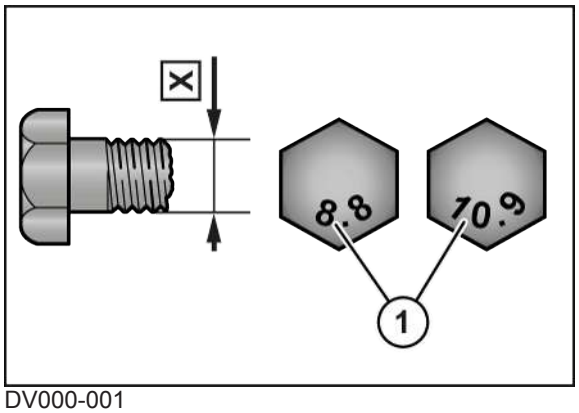

DV000-001

X Thread size 1 Strength class on screw head

X	Strength class			
	5.6	8.8	10.9	12.9
	Tightening torque (Nm)			
M12 x 1.5		88	130	152
M14 x 1.5		145	213	249
M16 x 1.5		222	327	382
M18 x 1.5		368	525	614
M20 x 1.5		465	662	775
M24 x 2		787	1,121	1,312
M27 x 2		1,148	1,635	1,914
M30 x 1.5		800	2,100	2,650

Metric thread screws with countersunk head and hexagon socket

INFORMATION

The table applies only to countersunk screws with hexagon socket and metric thread tightened via hexagon socket.

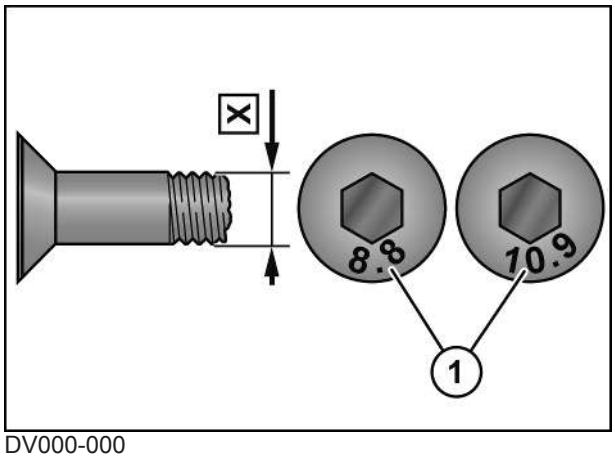

DV000-000

X Thread size

1 Strength class on screw head

X	Strength class			
	5.6	8.8	10.9	12.9
	Tightening torque (Nm)			
M4		2.5	3.5	4.1
M5		4.7	7	8
M6		8	12	15
M8		20	29	35
M10	23	39	58	67
M12	34	68	100	116
M14		108	160	188
M16		168	248	292
M20		340	488	568

Locking screws on the gearboxes

INFORMATION

The tightening torques only apply to assembly of locking screws, viewing glasses, ventilation and breather filters and bleed valves in gearboxes with cast housings or aluminium or steel housings. The term “locking screw” includes the drain plug, the inspection screw as well as the ventilation and breather filters.

This table applies only to locking screws with external hexagon in connection with copper seal ring and for bleed valves made of brass with shaped seal ring.

Thread	Locking screw and sight glass with copper ring[1] Ventilation/breather filter made of steel		Bleed valve made of brass Ventilation/breather filter made of brass	
	Steel and cast	Aluminium	Steel and cast	Aluminium
	Maximum tightening torque (Nm) (±10%)			
M10x1			8	
M12x1.5			14	
G1/4“			14	
M14x1.5			16	
M16x1.5	45	40	24	24
M18x1.5	50	45	30	30
M20x1.5			32	
G1/2“			32	
M22x1.5			35	
M24x1.5			60	
G3/4“			60	
M33x2			80	
G1“			80	
M42x1.5			100	
G1 1/4“			100	

[1] Always replace copper rings.

23.3 Compressed air connections to clean with compressed air

WARNING

Eye damage caused by flying dirt particles!

When cleaning the machine with compressed air or with high-pressure cleaner, the dirt particles are slung away at high speed. The dirt particles may hit the eyes and hurt them.

- Keep persons away from working range.
- When performing cleaning work with compressed air or with high-pressure cleaner, wear suitable working clothes (for example eye protection).

To clean the machine with compressed air, there is a blow-out gun with hose in the tool storage compartment. This blow-out gun can be connected to compressed-air connections on the machine.

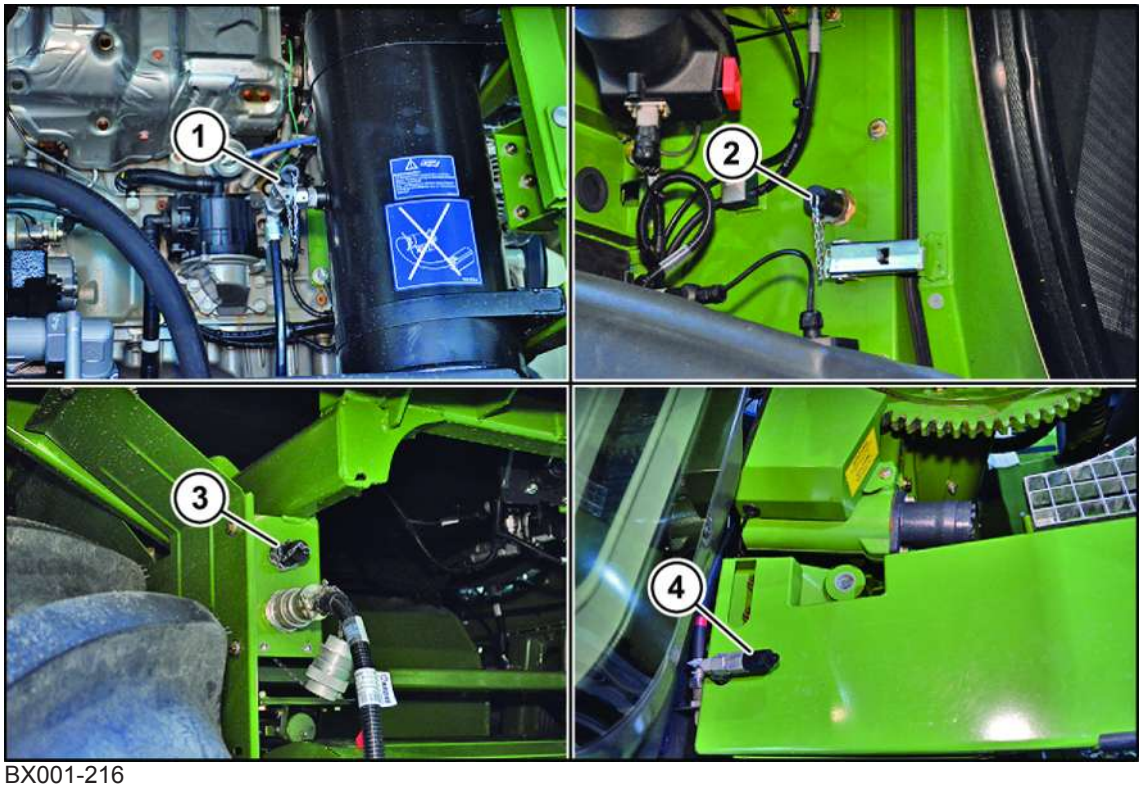

BX001-216

1	Compressed-air connection in the engine compartment	3	Compressed-air connection in the area of the intake
2	Compressed-air connection in the cooler compartment	4	Compressed air connection on the machine

24 Maintenance - Engine

⚠ WARNING

Risk of injury due to non-observance of relevant safety instructions

If the relevant safety instructions are not observed, persons may be seriously injured or killed.

- To avoid accidents, the relevant safety instructions must be read and observed, *refer to page 19*.

⚠ WARNING

Risk of injury due to non-observance of safety instructions

If the relevant safety routines are not observed, persons may be seriously injured or killed.

- The safety routines must be read and observed to avoid accidents, *refer to page 34*.

⚠ WARNING

Danger to health from dust from the damaged catalytic converter of the exhaust aftertreatment system

If the catalytic converter of the exhaust aftertreatment system is damaged, there is a risk to health from inhaling the emerging dust or insulation material.

- If the catalytic converter of the exhaust aftertreatment system is damaged, ensure that nobody inhales dusts from inside the catalytic converter or insulation.

NOTICE

Damage to the machine due to incorrectly performed or unfinished maintenance work

If maintenance work is not carried out by qualified personnel, the machine could be damaged. A qualified service centre has the required technical knowledge, qualifications and tools to perform the required work on the machine in a proper manner. This applies in particular to safety-relevant work.

- Always have the following work performed by a qualified specialist workshop:
  - Safety-relevant work
  - Service and maintenance work
  -Repair work
  - Modifications as well as installations and conversions
  - Working on electronic parts
- This chapter does not list all the necessary maintenance work of the engine. It is necessary to observe the maintenance instructions of engine manufacturer. The maintenance instructions are available at each qualified specialist workshop having access to the Workshop Information System (WIS) or after having participated in motor training at KRONE premises.

24.1 Engine overview

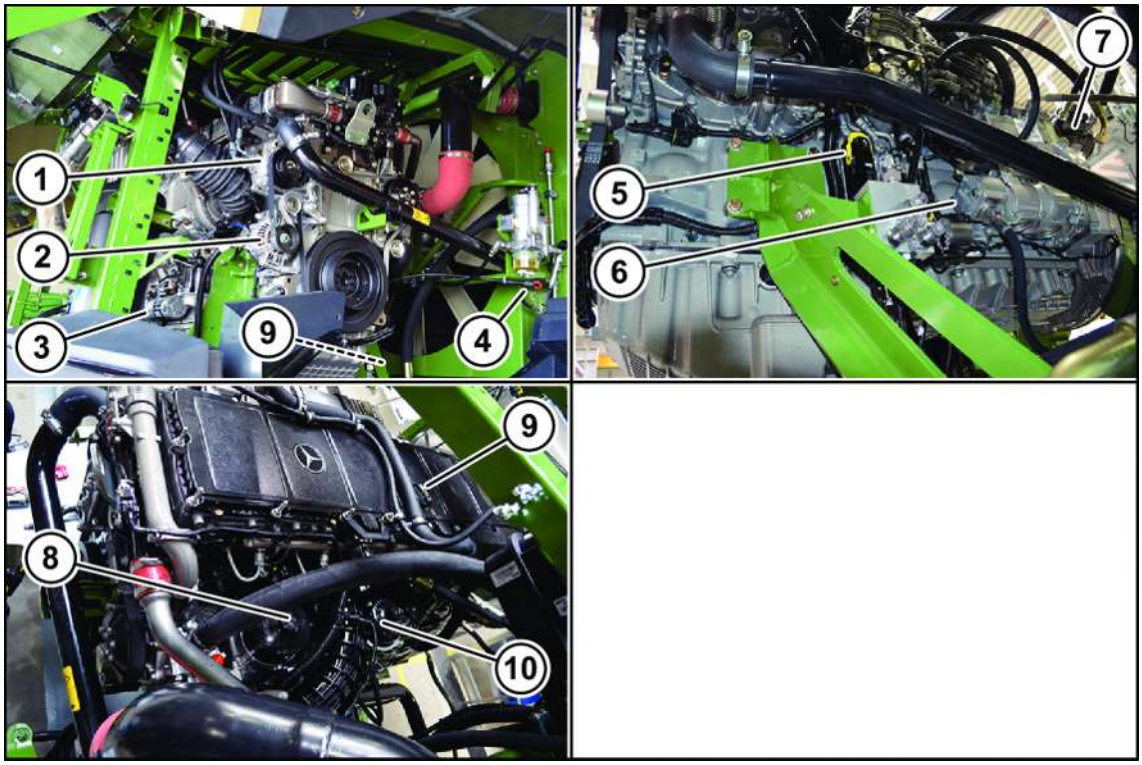

BX001-217

1	Refrigerating compressor	6	Hydraulic pump (circulation)
2	Alternator 24 volts	7	Variable displacement pump (work hydraulics / steering)
3	Starter 24 volts	8	Oil filter
4	Oil dipstick	9	Oil filler neck
5	Engine control (MCM)	10	Fuel filter

24.2 Dirt deposits in engine compartment

⚠ *WARNING*

Risk of fire due to dirt deposits in the engine compartment

A mixture of dust, oil and plant residue inside the engine compartment is a source of fire and presents an increased fire hazard.

- ▶ Always keep the engine compartment clean.

24.2.1 Cleaning engine compartment with compressed air

⚠ WARNING

Eye damage caused by flying dirt particles!

When cleaning the machine with compressed air or with high-pressure cleaner, the dirt particles are slung away at high speed. The dirt particles may hit the eyes and hurt them.

- Keep persons away from working range.
- When performing cleaning work with compressed air or with high-pressure cleaner, wear suitable working clothes (for example eye protection).

- If necessary, blow away the dirt and contamination and wipe off oil deposits.

24.3 Engine oil level

NOTICE

Engine damage due to excessively low or high oil level

If the oil level is too low, the amount of oil in the engine is too low, the lubrication points in the engine are not adequately supplied and there is a risk of engine damage. If the oil level is too high, the engine or the exhaust gas aftertreatment system may be damaged.

- Check oil level according to the engine maintenance table, *refer to page 414*.
- Check oil level only when machine is in a horizontal position.
- Do not start the engine if the oil level is below the bottom mark (min. mark) of the oil dipstick.
- Drain or extract oil which has been topped up too much.

To check the engine oil, the machine must be on a level surface and the main frame must be aligned horizontally.

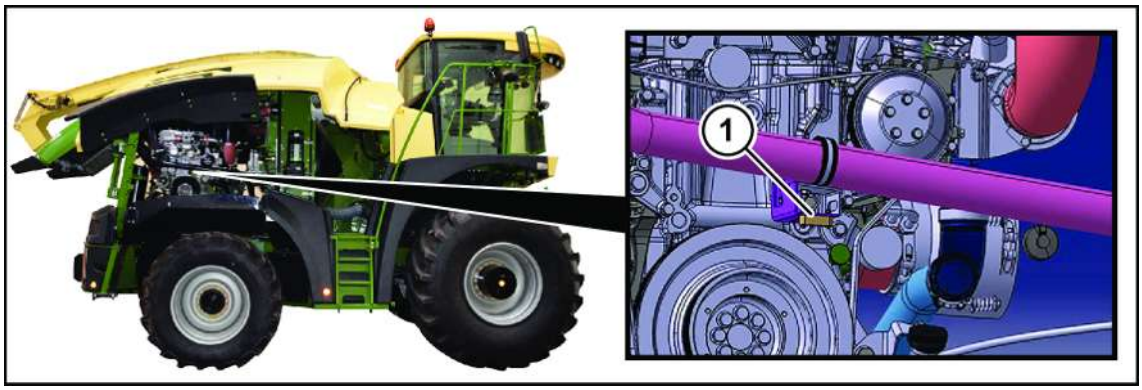

BX001-733

To facilitate horizontal alignment of the main frame, a spirit level (1) is located in the engine compartment.

- Align the main frame horizontally using the keys on the keypad by raising or lowering the rear axle.

24.3.1 Checking engine oil level

BXG000-029

✓ The main frame of the machine has been aligned horizontally.

✓ 5 to 10 minutes have passed after the engine has been switched off.

✓ Have a lint-free cloth at hand to clean the oil dipstick (1).

▶ Thoroughly clean the area around the oil dipstick (1).

▶ Pull out the oil dipstick (1), clean and push in all the way.

▶ Pull out the oil dipstick (1) and check the engine oil level.

If the engine oil level is indicated between the "min." and "max." marks, the engine oil level is correct.

▶ Push in the oil dipstick (1).

If the engine oil level is indicated below the "min." mark:

▶ Top up the engine oil, *refer to page 432*.

24.3.2 Topping up engine oil

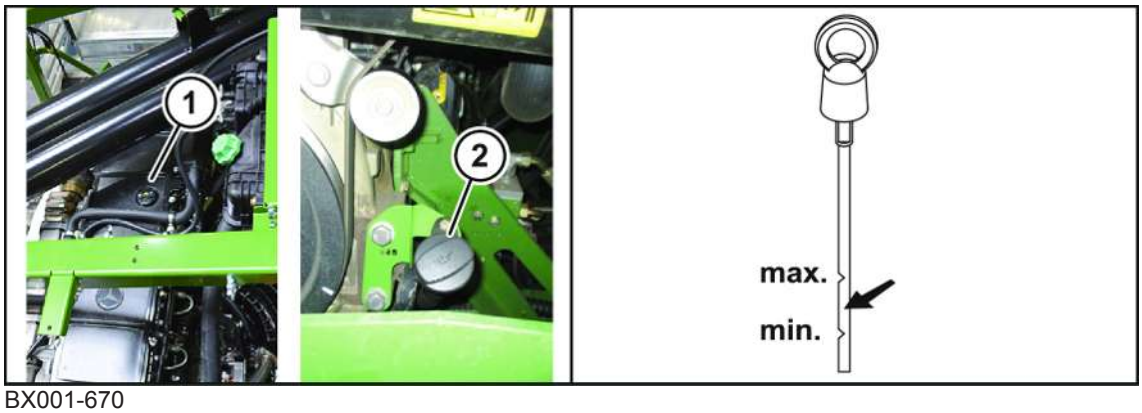

BX001-670

1 Upper oil filling pipe 2 Oil filling pipe on the right side of the machine

The engine features two filler necks for the engine oil, either of which can be used.

▶ Remove the cover (1, 2).

▶ Top up the engine oil via the oil filling pipe up to the "max." mark.

▶ Screw on the cover (1, 2).

▶ Run the engine at a low idle speed for a short time and switch off the engine.

▶ After approx. 5 to 10 minutes check the engine oil level, *refer to page 432*

INFORMATION

For further information, refer to the provided documents “Operating instructions” and “Fuel specification” of engine manufacturer, chapter Engine Oil.
The diesel engine is filled ex works with engine oil of SAE class 5W-30 according to Mercedes-Benz specification (sheet 228.51/sheet 228.5).
These engine oils are characterised by higher standard of quality and have favourable effects on

- Length of oil change interval
- Engine wear
- Fuel consumption
- Exhaust emissions

24.4 Fuel prefilter/water separator

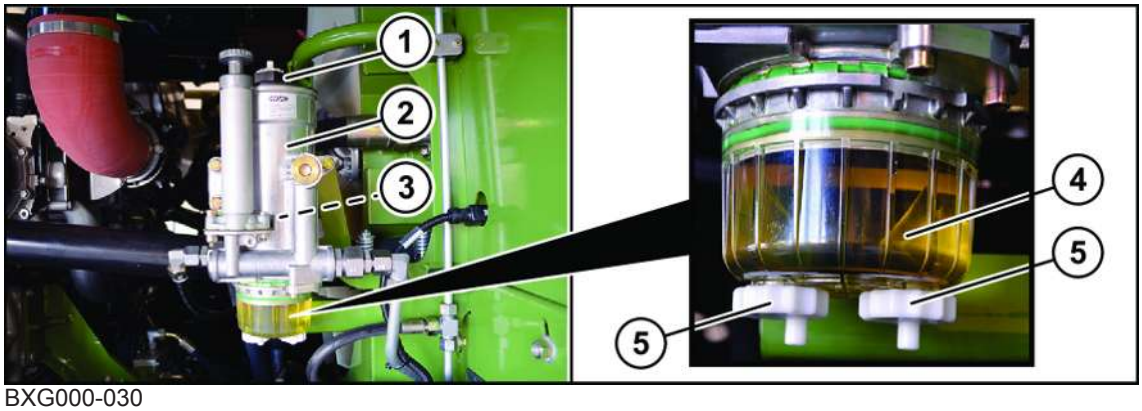

BXG000-030

The fuel prefilter is located on the right side of the machine on the left at the access to the machine compartment behind the right flap. The fuel prefilter cleans fuel.

24.4.1 Changing the fuel filter element

✓ The machine has been shut down and secured, *refer to page 34*
✓ Provide a new filter element and a new O-ring seal from HYDAC.
✓ A suitable vessel for collecting the draining fuel is available.

- Follow the instructions in the supplied document: operating instructions Water separator/ Fuel prefilter HDP 600, chapter "Changing filter element".
- Unscrew the screw cover (1) with filter element (3) and pull slightly out of the filter housing (2). Drain the fuel.
- Pull the screw cover (1) with filter element (3) completely out of the filter housing (2).
- Unclip the filter element (3) from the screw cover (1).
- Replace the O-ring seal on the screw cap (3) with the new O-ring seal.
- Clip the new filter element (3) into the screw cover (1).
- Wet the O-ring seals on the filter element (3) and on the screw cover (1) with fuel.
- Screw on the screw cover (1) with filter element (3) and tighten to 40 Nm.
- If required, clean the sight glass (4), see chapter Maintenance-Motor, "Cleaning sight glass fuel prefilter".
- Fill the fuel filter with diesel and check the filter for leaks.
- Vent the fuel system, *refer to page 441*.

24.4.2 Cleaning the fuel prefilter sight glass

✓ The machine has been shut down and secured, *refer to page 34*
✓ A new sealing ring from HYDAC is available.
✓ A suitable vessel for collecting the draining fuel is available.

- Follow the instructions in the supplied document: operating instructions Water separator/ Fuel prefilter HDP 600, chapter "Maintaining water collecting chamber".
- Hold the suitable vessel under the drain plug (5), slowly unscrew the drain plug (5) and drain the fuel into the vessel.
- Remove the drain plug (5).
- Unscrew the sight glass (4) from the filter housing (2).
- Clean the sight glass (4) with a brush but without using cleaning agents. Replace the sight glass (4) if required.
- Mount the new sealing ring on the sight glass (4) and wet with fuel.
- Screw the sight glass (4) onto the filter housing (2) and tighten to maximum 10 Nm.
- After cleaning the sight glass (4), insert the drain plug (5) and tighten to 2 Nm.
- Fill the fuel filter with diesel and check the filter for leaks.
- Vent the fuel system, *refer to page 441*.

24.4.3 Draining condensation water out of the fuel prefilter

The condensation water in the fuel is collected in the sight glass (4).

- Check daily whether condensation water has collected in the inspection glass (4).

If condensation water has collected in the inspection glass, the condensation water must be drained.

- Hold a suitable container under the drain plug (5).
- Open the drain plug (5).
- Drain the water/fuel mixture into the container.
- Close the drain plug (5).
- Dispose of the water/fuel mixture according to the applicable regulations.

24.5 Changing urea filter inserts

⚠ *CAUTION*

Risk of injury from contact with urea solution

The urea solution must not come in contact with the skin, eyes or clothing.

- If urea solution comes into contact with the eyes or skin, immediately rinse off with plenty of clear water.
- If urea solution is swallowed, rinse out the mouth immediately with plenty of clear water and drink a lot of water.
- If urea solution soils clothing, immediately change clothing.
- If allergic reactions occur, consult a doctor immediately.
- Keep children away from the urea solution.

⚠ CAUTION

Risk of injury from escaping ammonia vapours!

If the urea tank cap is opened at high temperatures, ammonia vapours may escape. Ammonia vapours have a pungent smell and irritate in particular:
- Skin
- Mucous membranes
- Eyes.

This can lead to burning of the eyes, nose and throat as well as irritation of the throat and tearing eyes.

▶ Do not inhale ammonia vapours.

Three urea filter elements are installed in the urea system:

- There is a prefilter in the urea tank
- A further prefilter and the main filter are mounted on the urea pump.

Main filter and prefilter on the urea pump

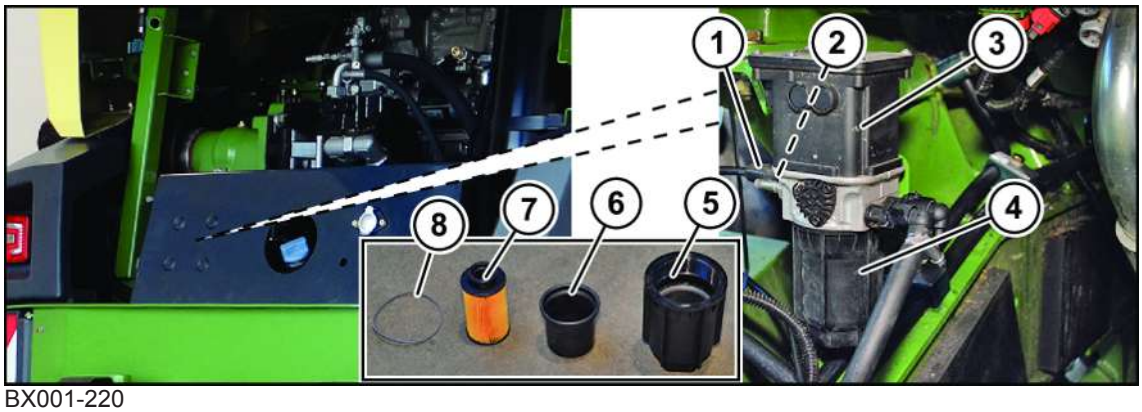

BX001-220

To replace the main filter and the prefilter on the urea pump:

▶ Switch off the engine and secure the machine against rolling away.

WARNING! If the old filter seat (4) is dismounted, there is risk of injury from contact with urea solution as the filter seat is still filled with urea. Wear personal protective equipment such as acid-resistant gloves and protective goggles and do not spill urea when dismounting the main filter.

▶ Unscrew the old filter seat (4) from the urea pump (3) and dispose of it properly with the old rubber insert, the filter elements and the seal ring.

▶ Screw the new filter seat (5) with the rubber insert (6), the filter element (7) and the seal ring (8) onto the urea pump, tightening torque = 80 Nm.

▶ Dismount the screw-in support (1) of the urea inlet hose.

▶ Dismount the old prefilter (2) and dispose of it properly.

▶ Insert the new prefilter and mount the screw-in support (1) of the urea inlet hose, tightening torque 14 Nm.

▶ Check the urea system for leaks.

Prefilter urea tank

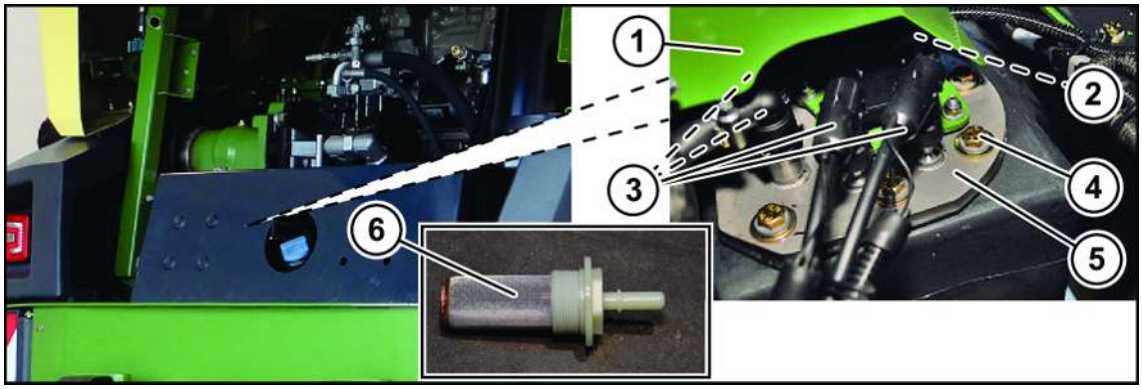

BX001-221

To change the prefilter in the urea tank:

- Dismount guard sheet of urea tank (1).
- Remove the urea quality sensor plug (2).
- Remove the 4 hoses (3).
- Unscrew the 8 screws (4) of the extraction module (5).

WARNING! There is a risk of injury from contact with urea solution if the old filter is removed from the urea tank and is disposed of. Wear personal protective equipment such as acid-resistant gloves and protective goggles and do not spill urea when dismounting the main filter.

- Remove the extraction module upwards with the suction line and the prefilter. (In doing so, ensure that no liquid runs out).
- Separate the cable tie on the old prefilter and loosen the hose clamp.
- Remove the prefilter from the suction line and dispose of it properly.
- Plug the new prefilter (6) onto the suction line and fasten with cable tie and hose clamp.
- Insert the new prefilter with suction line into the urea tank.
- When putting on the extraction module (5), make sure that the surface sealant between urea tank and extraction module rests flatly and without hollow spaces on the extraction module and on tank side.
- Tighten the extraction module with 8 screws (4).
- Attach the 4 hoses (3).
- Attach the plug of urea quality sensor (2).
- Mount guard sheet of urea tank (1).

Sieve in the filler neck

BX001-222

The sieve (3) in the filler neck (2) of the urea tank can be cleaned, if necessary.

To clean the sieve in the filler neck:

WARNING! There is a risk of injury due to contact with urea solution in case the sieve is taken out of the filler neck. Wear personal protective equipment such as acid-resistant gloves and protective goggles and do not spill urea when dismounting the main filter.

- ▶ Unscrew the cover (1) and remove the sieve (3) from the filler neck (2).
- ▶ Clean the sieve with water, if necessary.
- ▶ Insert the sieve into the filler neck and screw on the cover.

24.6 Cleaning the non-return valve on the urea pump module

⚠ *CAUTION*

Risk of injury from contact with urea solution

The urea solution must not come in contact with the skin, eyes or clothing.

- ▶ If urea solution comes into contact with the eyes or skin, immediately rinse off with plenty of clear water.
- ▶ If urea solution is swallowed, rinse out the mouth immediately with plenty of clear water and drink a lot of water.
- ▶ If urea solution soils clothing, immediately change clothing.
- ▶ If allergic reactions occur, consult a doctor immediately.
- ▶ Keep children away from the urea solution.

⚠ *CAUTION*

Risk of injury from escaping ammonia vapours!

If the urea tank cap is opened at high temperatures, ammonia vapours may escape. Ammonia vapours have a pungent smell and irritate in particular:
- Skin
- Mucous membranes
- Eyes.

This can lead to burning of the eyes, nose and throat as well as irritation of the throat and tearing eyes.

- ▶ Do not inhale ammonia vapours.

NOTICE

Environmental damage caused by urea

If the used urea filter elements are not disposed of as hazardous waste, urea may escape and damage the environment.

- The used urea filter elements must be disposed of as hazardous waste according to national law.

Under unfavourable conditions and when the machine has been down for a long downtime, the non-return valve may stick in the urea pump and prevent urea from being conveyed. If urea is not being pumped into the engine exhaust aftertreatment system, an error message will appear after a short operating time and the torque and the speed of the diesel engine will be reduced.

Cleaning with compressed air will clear the non-return valve and the urea can be pumped again to the exhaust aftertreatment system of the engine.

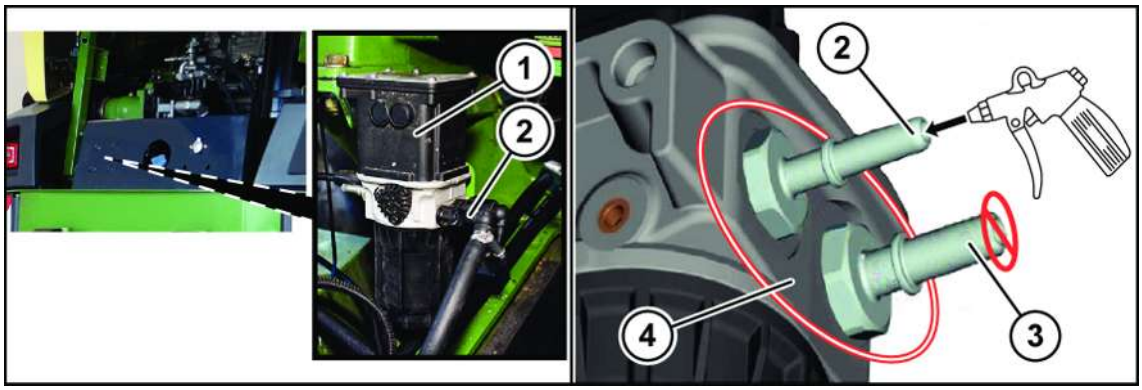

BX001-861

To clean the non-return valve in the pump module:

WARNING! There is a risk of injury from coming into contact with urea solution if the intake connection is removed and compressed air is blown in. To prevent contact with the urea solution, wear personal protective equipment, such as acid-proof gloves and safety glasses.

- Remove the intake connection (2) and the pressure connection (3) from the pump module (1).
- Blow compressed air into the intake connection (2) for 3 s.
- Clean the area (4) around the connections of the urea lines with compressed air.
- Attach the intake connection (2) and the pressure connection (3) to the pump module (1).

24.7 Refuelling

NOTICE

Machine damage due to use of unauthorised or contaminated fuel.

If refuelling with unauthorised or contaminated fuel or with fuel which has a high sulphur content, the engine and the exhaust gas after-treatment system will be damaged.

- ▶ Refuel only with standard, sulphur-free diesel fuel, according to EN 590.
- ▶ Do not refuel with contaminated fuel.
- ▶ Observe the operating instructions of engine manufacturer, chapter “Refuelling”.
- ▶ Do not use the following fuels:
  - Fuels containing more than 0.005% (50ppm) sulphur
  - Marine diesel fuel
  - Aviation turbine fuel
  - Heating oil
  - Fatty acid methyl ester FAME (bio-diesel fuels)

NOTICE

Machine damage by water in the fuel

If the machine is parked with tank unfilled, condensation water may form and when it is cold, freezing could result.

- ▶ Refuel daily at the end of operation.

BMG000-009

Filling quantity: *refer to page 67*

- ▶ Follow the instructions in the following, supplied document: Engine operating instructions, "Refuelling" section.
- ▶ Shut down and secure the machine, *refer to page 34*.
- ▶ Clean around the filler neck (1).
- ▶ Unscrew the tank cap.
- ▶ Fill the fuel tank with fuel.
- ▶ Close the tank cap tight.

24.8 Topping up urea solution

⚠ CAUTION

Risk of injury from contact with urea solution

The urea solution must not come in contact with the skin, eyes or clothing.

- ▶ If urea solution comes into contact with the eyes or skin, immediately rinse off with plenty of clear water.
- ▶ If urea solution is swallowed, rinse out the mouth immediately with plenty of clear water and drink a lot of water.
- ▶ If urea solution soils clothing, immediately change clothing.
- ▶ If allergic reactions occur, consult a doctor immediately.
- ▶ Keep children away from the urea solution.

⚠ CAUTION

Risk of injury from escaping ammonia vapours!

If the urea tank cap is opened at high temperatures, ammonia vapours may escape. Ammonia vapours have a pungent smell and irritate in particular:
- Skin
- Mucous membranes
- Eyes.

This can lead to burning of the eyes, nose and throat as well as irritation of the throat and tearing eyes.

- ▶ Do not inhale ammonia vapours.

NOTICE

Damage to the machine due to incorrect handling of the urea solution

The machine or the exhaust aftertreatment system could be damaged due to incorrect handling of the urea solution.

- ▶ Use only urea solution according to DIN 70070 /I SO 22241.
- ▶ To prevent damage to the urea tank at very low temperatures, do not overfill the urea tank.
- ▶ To prevent damage to the exhaust gas after-treatment system due to contaminants, seal the tank properly.
- ▶ To prevent damage to the exhaust gas after-treatment system, the urea solution must not be mixed with additives or diluted with tap water.

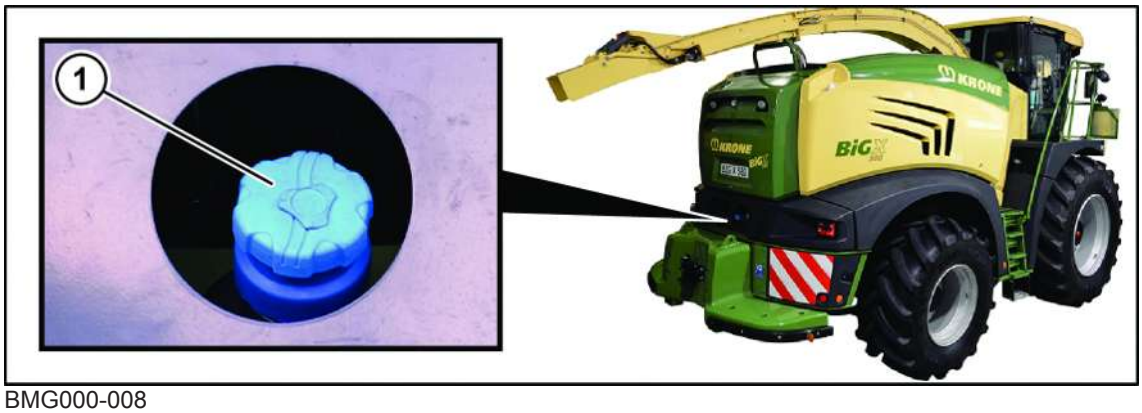

BMG000-008

Filling quantity: *refer to page 67*

- ▶ Follow the instructions in the following, supplied document: Engine operating instructions, "Refuelling" section.
- ▶ Shut down and secure the machine, *refer to page 34*.
- ▶ Clean around the filler neck (1).
- ▶ Unscrew the tank cap.
- ▶ Fill the urea tank with urea solution until the pump nozzle switches off.
- ▶ Close the tank cap tight.

24.9 Vent fuel filter

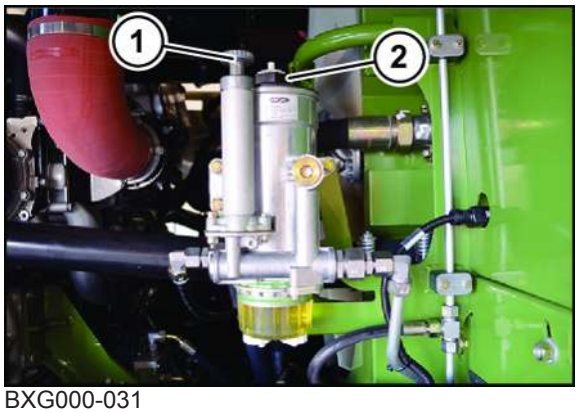

BXG000-031

It may be necessary to vent the fuel filter

- after the filter element on the fuel prefilter was changed
- after prolonged machine standstill
- after filling the previously drained fuel system
- after initial operation

The vent the fuel filter:

- ✓ The machine is shut down and safeguarded, *refer to page 34*.
- ▶ Follow the instructions in the following, supplied document: Engine operating instructions, chapter "Venting the fuel system".
- ▶ To allow air to escape, unscrew the venting screw (2).
- ▶ Turn the activation lever (1) to the left until the activation lever (1) can be moved freely upwards.
- ▶ Pump the activation lever (1) until fuel comes out of the venting screw (2).
- ▶ If fuel comes out, guide the activation lever (1) downwards and lock by turning it to the right.
- ▶ Screw in the venting screw (2) and clean up any fuel which has run out.

24.10 Engine coolant

NOTICE

Damage to the cooling system by using incorrect coolant

If a mixture of coolant containing silicate and a silicate-free coolant is used, this may cause damage to the cooling system of the diesel engine.

- ▶ Never use a mixture of coolant containing silicate and a silicate-free coolant as an engine coolant.

The engine cooling system is filled ex works with a coolant according to Mercedes-Benz specification (sheet 325,5 / sheet 326,5) which ensures protection against freezing and corrosion as well as other protective effects.

The engine coolant is a mixture of water, anti-corrosion agent and frost protection agent.

The engine coolant has the following properties:

- Heat transfer
- Corrosion protection
- Cavitation protection (protection against pitting)
- Frost protection
- Increase in the boiling point

The engine coolant must remain in the engine cooling system irrespective of the time of year, even in countries which have high outdoor temperatures.

When replacing engine coolant, ensure that

- ▶ the engine coolant contains 50% vol. anti-corrosion agent and frost protection agent. This is equivalent to frost protection down to -37° C.
- ▶ the percentage of anti-corrosion agent and frost protection agent in the engine coolant does not exceed 55% vol. This is equivalent to frost protection down to -45° C. Otherwise, the frost protection and the heat supply will deteriorate.
- ▶ the engine coolant is not mixed with a different anti-corrosion agent and frost protection agent.
- ▶ a low coolant level is not topped up not only with water, but also with the correct percentage of an approved anti-corrosion agent and frost protection agent.

24.11 Checking the engine coolant level

⚠ *WARNING*

Risk of fire from frost protection agent

If frost protection agent comes into contact with hot components in the warm engine compartment, it may ignite. There is a risk of fire and injuries.

- ▶ Leave the engine to cool down before filling with anti-freeze.
- ▶ Keep anti-freeze away from the filler neck.
- ▶ Before starting the engine, thoroughly clean components contaminated with frost protection agent.

⚠ *WARNING*

Danger of injury due to scalding

The engine cooling system is under pressure, especially when the engine is warm. If the cover is opened when the engine is warm, hot coolant may spray out. There is risk of injury.

- ▶ Leave the engine to cool down before opening the cover.
- ▶ When opening the cover, wear suitable gloves and goggles.
- ▶ To relieve the pressure, open the cover by a half turn.

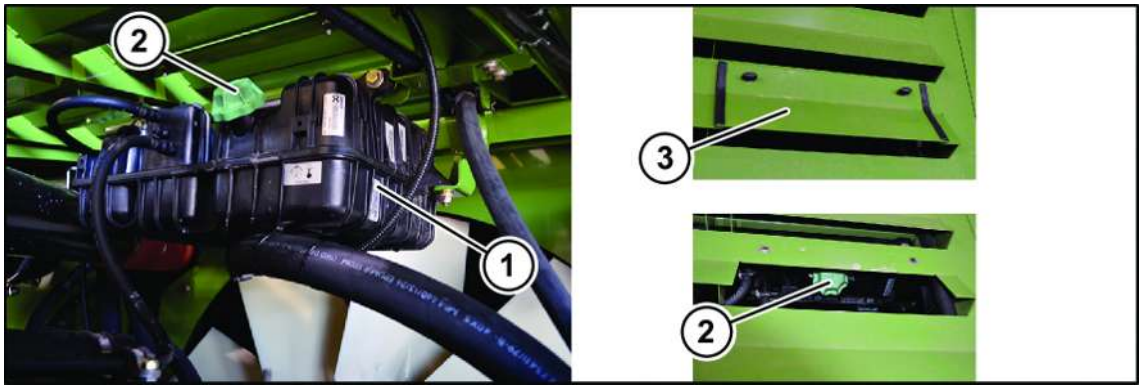

BXG000-032

The reservoir (1) for the coolant is located behind the side hood on the right in the centre on top of the machine compartment. The filling cover (2) is accessible from the top of the machine behind the spout under the cover (3).

The coolant level is monitored by a sensor. If the coolant level is too low, an error message is indicated on the display. The coolant level must be topped up immediately.

- Follow the instructions in the following, supplied document: Engine operating instructions, chapter Consumables "Coolant".

Checking engine coolant level:

The coolant level must be visible in the filler neck.

Topping up the engine coolant:

- Follow the instructions in the following, supplied document: Engine operating instructions, chapter Consumables "Coolant".
- Shut down and secure the machine, *refer to page 34*.
- Remove the cover (3) and place to one side.
- To relieve residual pressure, open the cover (2) by a half turn.
- Unscrew the cover (2).
- Pour in coolant until the fluid level in the filler neck is visible.
- Screw on the cover (2).
- Attach and close the cover (3).

Filling quantity: *refer to page 67*

24.12 Checking engine piping

24.12.1 Checking pipework in the air conditioning and heating system

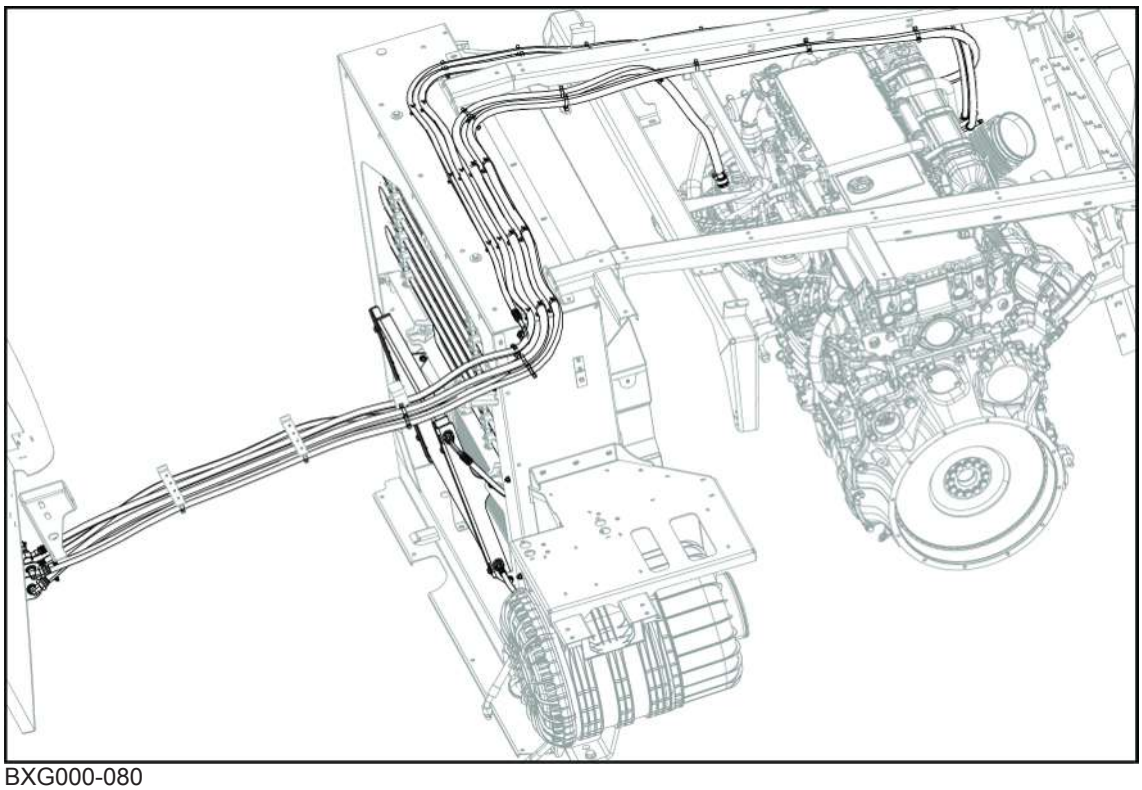

BXG000-080

- Check all lines, hoses and sleeves for leaks and condition and replace if required.

24.12.2 Checking tubing in engine cooling system

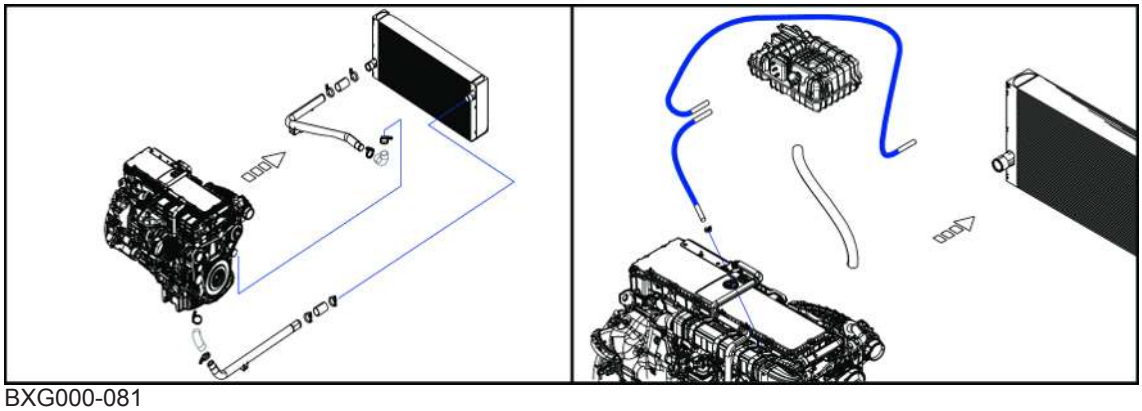

BXG000-081

- Check all lines, hoses and collars for leaks and condition and replace if required.
- Attach the hose clamps of the joint bolts during the initial installation with a tightening torque of 9 Nm.
- Warm up the machine.
- Retighten the joint bolt hose clamps with a tightening torque of 10-11 Nm.

24.12.3 Checking pipework in air intake and charge air

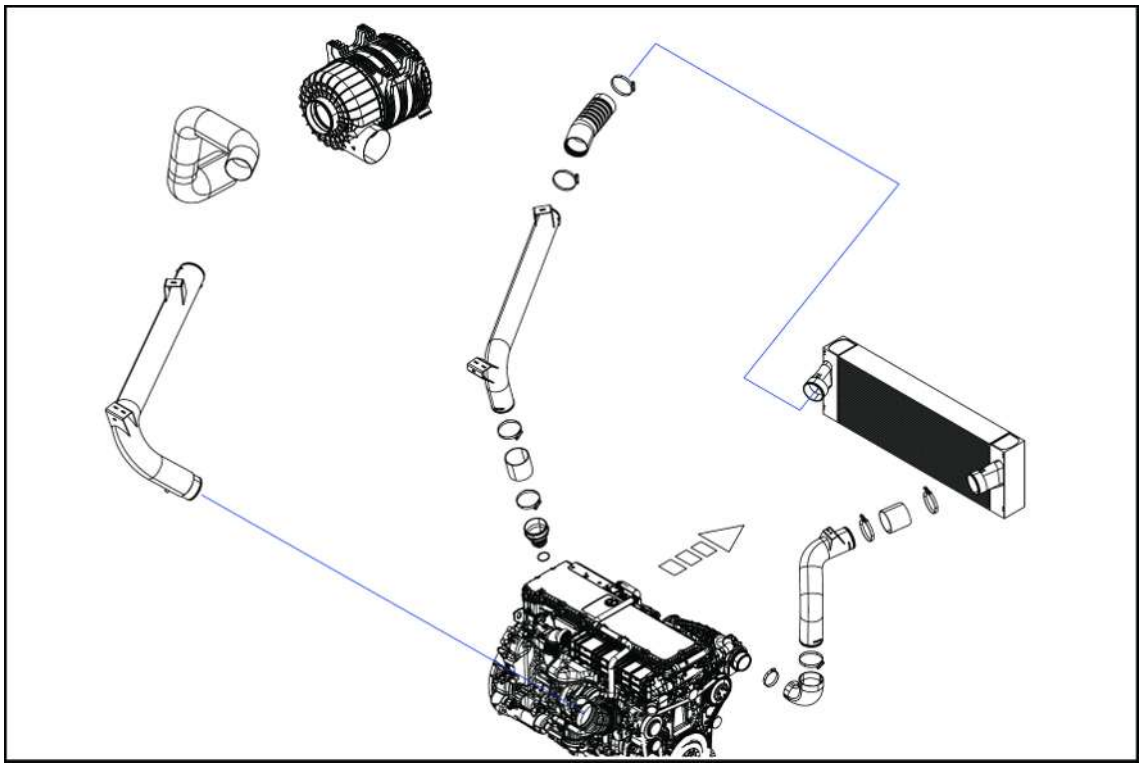

BXG000-082

- Check all lines, hoses and collars for leaks and condition and replace if required.
- Attach the joint bolt hose clamps with a tightening torque of 10-12 Nm.

24.12.4 Checking fuel lines

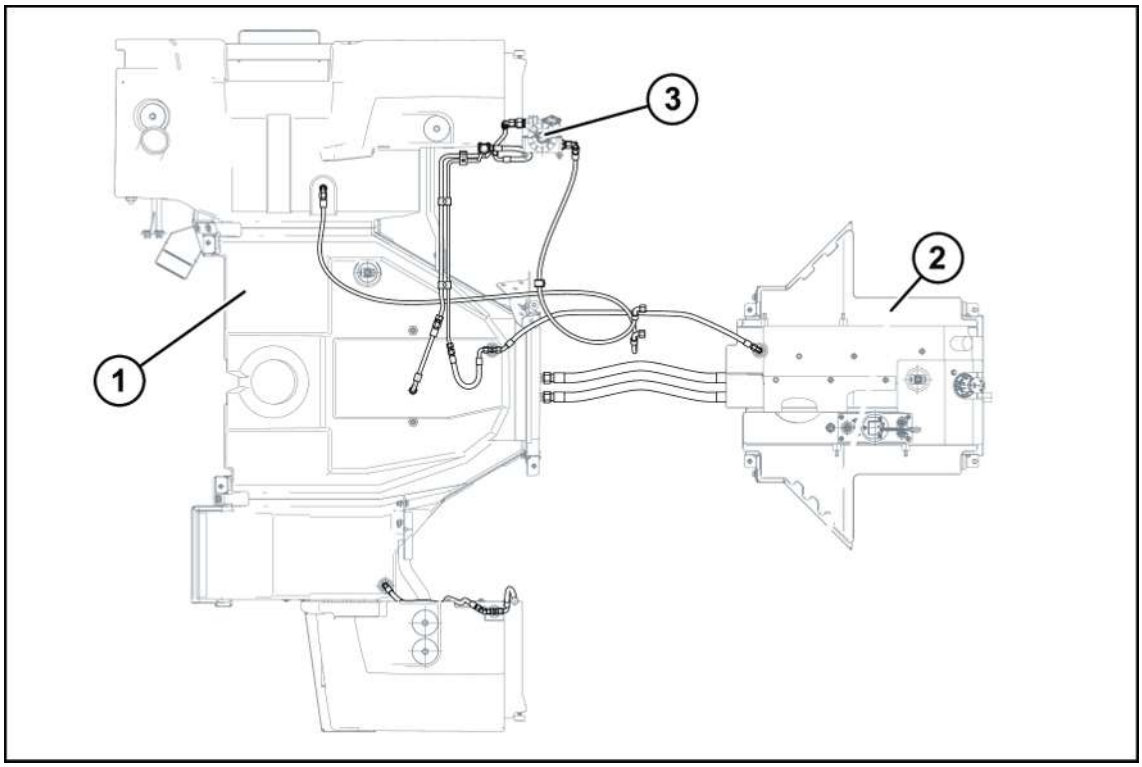

BX001-226

1 Fuel tank
2 Additional tank
3 Fuel prefilter

- Check all lines, hoses and sleeves for leaks and condition and replace if required.

24.13 Cleaning air filter

NOTICE

Engine damage caused by dirty or damaged air filter or safety cartridge

If the machine is operated with a soiled or damaged air filter or safety cartridge, the diesel engine may be damaged.

- Clean or replace the air filter and the safety cartridge according to the maintenance table, *refer to page 414*.
- Immediately replace a damaged air filter or a damaged safety cartridge.
- Do not clean and reuse the safety cartridge but always replace it by a new one.

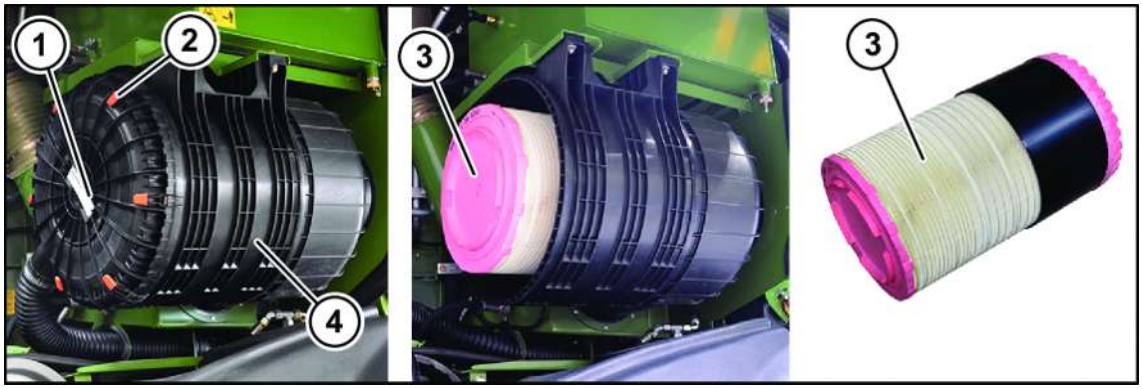

BMG000-010

Interval for testing and changing: *refer to page 414*.

- Shut down and safeguard the machine, *refer to page 34*.
- Release the clamps (2) and remove the cover (1).
- By gently turning the filter element (3), carefully pull it out of the filter housing (4).
- Clean the interior area and the sealing surfaces of the filter housing (4).
- Blow out the filter element (3) with compressed air (max. 5 bar) from the inside to the outside.

If the filter element is excessively soiled or damaged, replace the filter element. If the installation date of the filter element is 4 years old, replace the filter element.

- Install the cleaned or a new filter element (3).
- Attach the cover (1) so that the extraction hose is aligned with the middle of the machine.
- Secure the cover (1) with the clamps (2).

24.14 Replacing safety cartridge

NOTICE

Engine damage caused by dirty or damaged air filter or safety cartridge

If the machine is operated with a soiled or damaged air filter or safety cartridge, the diesel engine may be damaged.

- Clean or replace the air filter and the safety cartridge according to the maintenance table, *refer to page 414*.
- Immediately replace a damaged air filter or a damaged safety cartridge.
- Do not clean and reuse the safety cartridge but always replace it by a new one.

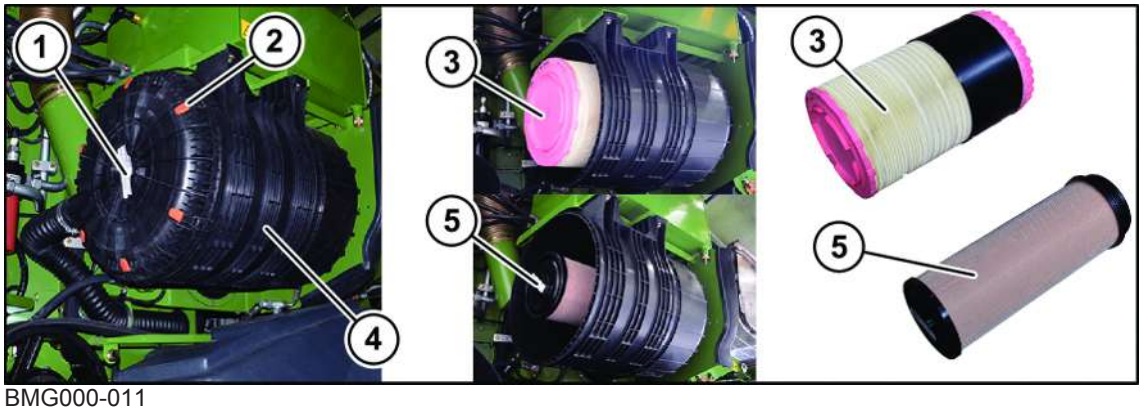

BMG000-011

Interval for checking and changing: *refer to page 414*.

- Shut down and safeguard the machine, *refer to page 34*.
- Release the clamps (2) and remove the cover (1).
- By gently turning the filter element (3), carefully pull it out of the filter housing (4).
- Unscrew the safety cartridge (5).
- Clean the interior area and the sealing surfaces of the filter housing (4).
- Screw in a new safety cartridge (5).
- Install the cleaned or a new filter element (3).
- Attach the cover (1) so that the extraction hose is aligned with the middle of the machine.
- Secure the cover (1) with the clamps (2).

24.15 Shutting down the diesel engine

INFORMATION

For information concerning procedures which must be performed on the engine prior to putting the machine into storage, see supplied operating instructions of the engine manufacturer, chapter Cleaning and Care and chapter Storing When not in Use.

Measures for shutting down the engine for a period of 30 days to 6 months

To avoid deposits by the 7% biodiesel contents in the diesel fuel as well as the consequential damage or problems which may arise from this when restarting, observe the following points when shutting down the machine (in addition to the measures stated in the operating instructions of the engine manufacturer:

- The engine must be run monthly for approx. 10 min at max. 900 rpm with air conditioning and heating switched on.
- Before starting, it is essential to check engine oil level and coolant level. In addition, the water separator on the fuel prefilter must be drained.
- When starting or running the engine, it is essential to pay attention to the oil pressure as well as the coolant and oil temperature.

INFORMATION

The monthly engine start may be omitted if the engine was operated with FAME-free fuel (B0 diesel fuel) and shut down.

If the engine system has been operated beforehand with normal diesel fuel according to DIN EN 590 with 7% biodiesel contents, it is sufficient in this case to pump down the remaining fuel in the tank and to fill it with sufficient B0 fuel, but at least 50 l.

Before shutdown, the engine system must at least be operated 30 min with this fuel so that all fuel-conducting parts are flushed.

The B0 requirement is currently fulfilled e.g. by fuels such as Aral Ultimate Diesel and BP Ultimate Diesel.

These measures are valid in conjunction with operating instructions, version 01-14 of the engine manufacturer.

25 Maintenance – Compressed Air System

⚠ WARNING

Risk of injury due to non-observance of relevant safety notices

If the relevant safety notices are not observed, persons may get seriously injured or killed.

- To avoid accidents, the basic safety instructions must be read and observed, *refer to page 19*.

⚠ WARNING

Risk of injury due to non-observance of safety instructions

If the relevant safety routines are not observed, persons may be seriously injured or killed.

- The safety routines must be read and observed to avoid accidents, *refer to page 34*.

⚠ WARNING

Risk of injury from escaping compressed air

The compressed air system is under high pressure. Escaping compressed air may seriously injure skin, limbs and eyes.

- Shut down and safeguard the machine, *refer to page 34*.
- Reduce the pressure from the compressor unit.

25.1 Drain condensation water from the compressed air tank

⚠ WARNING

Risk of injury from corroded or damaged compressed air reservoirs

Damaged or corroded compressed air reservoirs may burst and cause serious injuries.

- Observe the inspection intervals according to maintenance table, *refer to page 414*.
- Have damaged or corroded compressed air reservoirs replaced immediately by a specialist workshop.

NOTICE

Damage to compressed air reservoir caused by water in the compressor unit

Water in the compressor unit leads to corrosion which damages the compressed air reservoir.

- Check and clean drain valve according to maintenance table,*refer to page 414*.
- Immediately replace a defective drain valve.

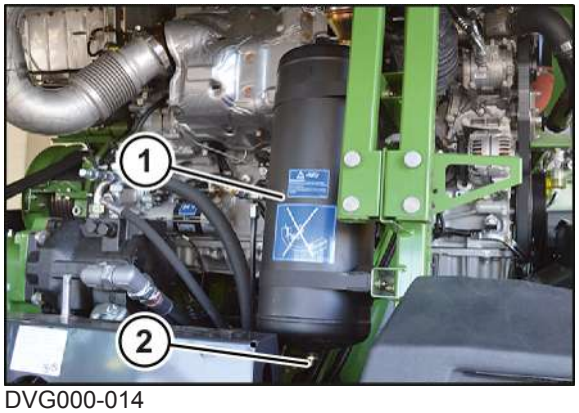

DVG000-014

- ▶ Shut down and safeguard the machine, *refer to page 34*.

WARNING! Risk of eye injury due to spurting condensation water! Wear suitable protective goggles.

- ✓ A suitable container is available for escaping condensation water.
- ▶ Open the drain valve (2).
- ➡ Allow compressed air and condensation water to escape out of the compressed-air tank (1).
- ▶ Visually inspect the drain valve (2) to ensure that it is not defective or soiled.
- ➡ If the drain valve (2) is defective and is no longer sealed, immediately have the drain valve (2) replaced by a KRONE service partner.
- ➡ If the drain valve (2) is soiled, clean the drain valve (2).

25.2 Retighten tensioning straps at the compressed air tank

For an overview of the tightening torques, *refer to page 424*.

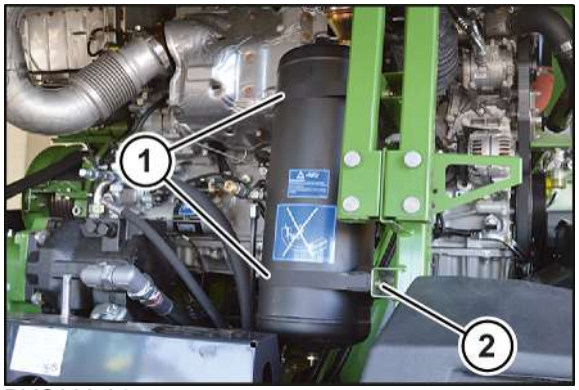

DVG000-015

- ▶ Shut down and safeguard the machine, *refer to page 34*.
- ▶ Check that the tensioning straps (1) are firmly attached.

If the compressed-air tank cannot be turned by hand, the tensioning straps (1) have been correctly set.

If the compressed-air tank can be turned by hand, the tensioning straps (1) must be retensioned.

- ▶ To tension the tensioning straps (1), tighten the nuts (2).

26 Maintenance – Basic Machine

⚠ WARNING

Risk of injury due to non-observance of relevant safety instructions

If the relevant safety instructions are not observed, persons may be seriously injured or killed.

- To avoid accidents, the relevant safety instructions must be read and observed, *refer to page 19*.

⚠ WARNING

Risk of injury due to non-observance of safety instructions

If the relevant safety routines are not observed, persons may be seriously injured or killed.

- The safety routines must be read and observed to avoid accidents, *refer to page 34*.

26.1 Checking/refilling windscreen washer system

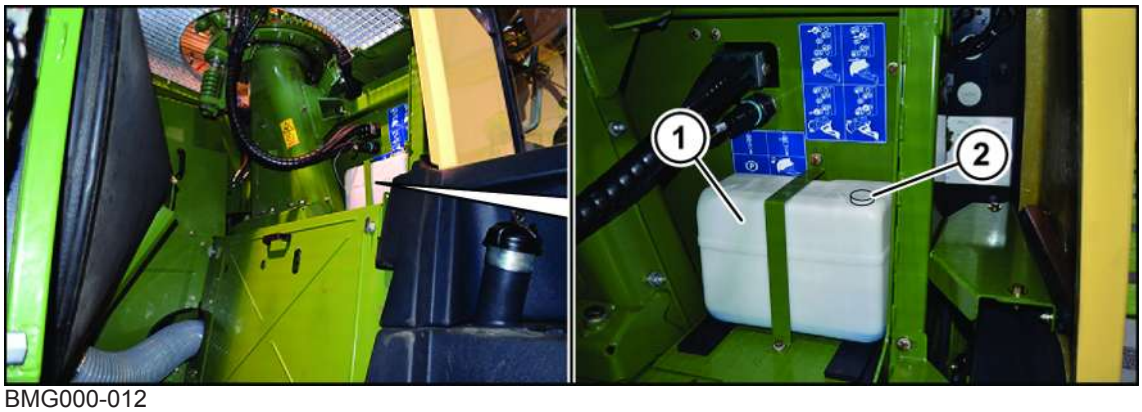

BMG000-012

The reservoir (1) for the windscreen washer system is located on the left behind the flap over the ladder.

- Check the level of the windscreen washer system daily.

If the cleaning fluid can be seen in the reservoir, the fluid level is correct.

If no cleaning fluid can be seen in the reservoir, refill:

- Open the cover (2) and add cleaning fluid.
- Close the cover (2).

INFORMATION

- To achieve a better cleaning effect under extreme crop and road conditions, add windscreen cleaner/anti-freeze.
- In winter drain the washer system or fill with special anti-freeze.

26.2 Maintaining air conditioning and heating

⚠ WARNING

Risk of injury from touching refrigerant

During repair, upkeep, maintenance and cleaning work on the refrigerant circuit, refrigerant may be emitted; refrigerant may be emitted in liquid or gaseous form and is hazardous to people and the environment.

- Switch off the engine, remove the ignition key and take it with you.
- Secure the machine against the possibility of rolling back.
- Take suitable protective measures (for example wear protective goggles and protective gloves).
- Repair, upkeep, maintenance and cleaning work must be carried out only by authorised specialists.
- If the refrigerant causes burns, always consult a doctor and take the refrigerant data sheet R 134a (excerpt) with you, *refer to page 70*.
- Ensure sufficient ventilation when working on the cooling system.
- During refill and repair work do not allow refrigerants to escape; dispose of them into a recycling container.
- Spare parts that are used must correspond to the technical requirements of the machine manufacturer. For this reason, use KRONE original spare parts only.
- Extreme caution is advised when welding close to the air conditioning system.

NOTICE

Environmental damage due to chemicals

The air conditioning is operated with refrigerant R134a (tetrafluorethane). This substance contains no chlorine atoms, and thus is not harmful to the ozone in the atmosphere of the world. Nonetheless, the refrigerant must not be drained; it must be collected at a recycling plant.

- Collect the refrigerant with a recycling plant.
- Thus do NOT separate the connecting pipes beforehand.
- Have all maintenance and repair work on the air conditioning carried out only by your KRONE dealer with a suitable disposal and recycling equipment.

26.2.1 Components of air conditioning

The components of air conditioning and their position in the machine.

Compressor	On the right side at the back on the engine, driven by V-belt
Capacitor	Behind the sieve drum, accessible from right-hand machine side
Dryer/collector	Behind the sieve drum, accessible from right-hand machine side
Evaporator	In the cabin roof
Pressure switch	On the dryer, behind the sieve drum
Expansion valve	At the evaporator inlet
Control panel automatic climate control	In the roof console of the cabin

26.2.2 Carrying out a visual inspection at the receiver/dryer

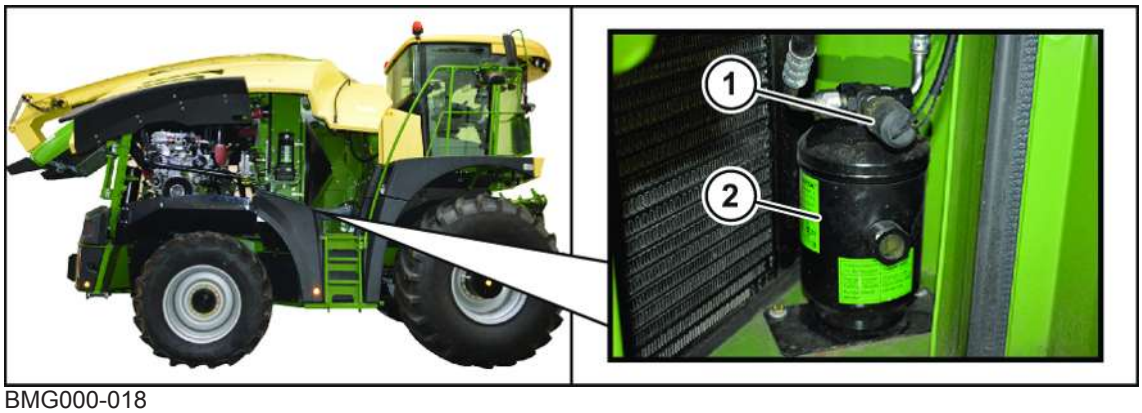

BMG000-018

The receiver (2) with pressure switch (1) is located behind the rotating screen in the left cooler box.

As the receiver (2) is pressurised, it is subject to the pressurised container regulations during production and testing. According to this regulation the pressurised tank is classified as test group II in accordance with the permissible overpressure p in bar, the volume l in litres and the pressure product p x l.

According to Section 10 of the Pressurised Vessel Regulations these pressurised containers must be subjected to recurring tests by an expert in accordance with section 32. In this case the recurring tests consist, as a rule, of external inspections of tanks in use. In combination with the inspection the receiver (2) must be visually inspected twice a year. Special attention shall be given to corrosion and mechanical damage. If the container is not in a correct state, it must be replaced by a qualified service centre for safety reasons to ensure sufficient protection to the user and third parties due to the hazard which may be caused in handling or operating pressurised containers.

INFORMATION

The ambient temperature must exceed the temperature set at the thermostat (generally +1°Celsius) for the compressor to switch on.

26.2.3 Checking the condition and filling quantity of refrigerant

Regularly check the dryer/receiver unit and replace it when required, but at least once a year.

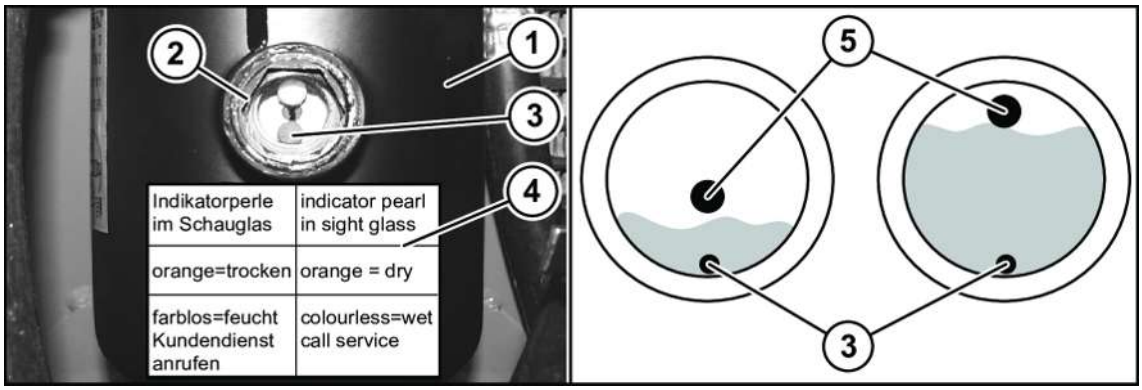

BX001-239

Check the filling quantity

Interval for checking refrigerant level: *refer to page 414*

The amount of refrigerant is checked on the sight glass (2) via the white float (5).

- Start the engine.
- Switch on the air conditioning and set to maximum cooling.

If the white float (5) is at the top, the refrigerant level is correct.

If the white float (5) is at the bottom, the refrigerant must be topped up by a qualified service centre, filling quantity *refer to page 70*.

Checking the refrigerant condition

Checking the interval for refrigerant condition: *refer to page 414*.

- Observe the label (4) on the dryer (1).

If the indicator perl (3) is orange, the refrigerant condition is OK.

If the indicator perl (3) has turned colourless, the dryer/receiver unit must be changed by a specialist workshop.

26.2.4 Replacing/cleaning fresh air filter

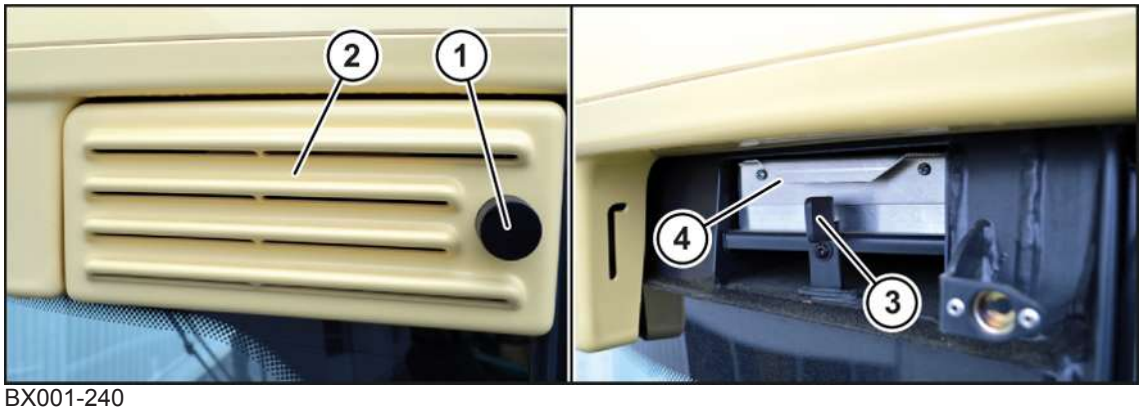

BX001-240

> ***INFORMATION***
>
> If filters are not properly maintained, the fresh air filter may become very soiled and it can no longer be guaranteed that adequate fresh air will flow into the cab.

A fresh air filter (4) in the form of a wedge filter is located in the upper cab area behind the ventilation grid (2) on the left hand side in direction of travel. The fresh air filter protects the driver in the cab against airborne contamination outside the cab. Always check the fresh air filter before starting to drive the machine.

- Open the closing device (1) by turning it 90° clockwise and remove the ventilation grid (2).
- To unlock the filter, reverse the locking lever (3) to the left.
- Pull out the fresh air filter (4), check for soiling and clean if required.

Clean fresh air filter (4) by shaking it out, never use compressed air to clean it. If heavily soiled, replace the fresh air filter (4).

- Reinsert the fresh air filter (4).
- Lock fresh air filter by means of locking lever (3).
- Insert the ventilation grid (3) and close it via the closing device (1).

26.2.5 Replacing/cleaning circulation filter

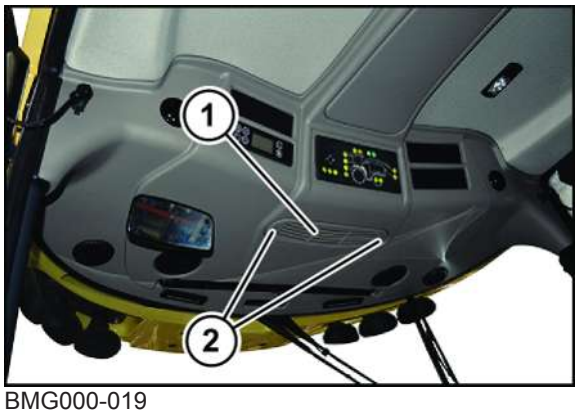

BMG000-019

> ***INFORMATION***
>
> If the filters are not adequately maintained, the circulation filter may become heavily soiled and cause a reduction in the output of the air conditioning and the heating.

- To clean the circulation filter, loosen the screws (2) and remove the ventilation grid (1) together with the filter element.
- Clean filter element with compressed air and replace it, if necessary.
- Mount the ventilation grid (1) together with the filter element, ensuring that the filter element is correctly inserted.
- Press in the screws (2).

26.3 Cleaning cooler and cooler compartment

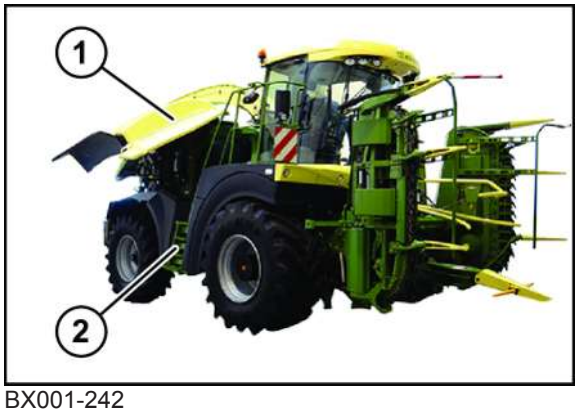

BX001-242

The right side hood is used to access the cooler, the maintenance flaps of the crop flow and the right side of the engine compartment.

- Open the side hood (1) and enter the cooler compartment via the right ladder (2).
- Every day remove dirt from around the area of the engine compartment and the cooler and clean the ambient area to prevent the risk of fire and wipe off any oil residue.
- If there is a large accumulation of dust and if the crops are very dry, clean the above locations more frequently.

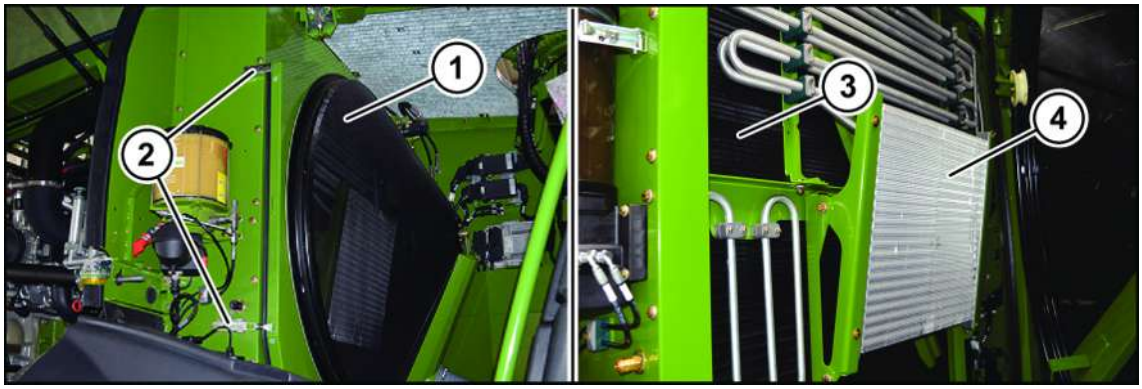

BXG000-033

Water cooler, oil cooler, charge air cooler and capacitor are located behind the sieve drum in the machine compartment.

Preferably clean the cooler and the capacitor while the engine is cold.

- ▶ Open the snap locks (2) on the rotating screen (1) and open the rotating screen.
- ▶ Blow out the coolers (3) with compressed air from the engine compartment in the direction of travel. Ensure that the blades are not damaged.
- ▶ Blow out the capacitor (4) with compressed air from the cooler compartment against the direction of travel. Ensure that the blades are not damaged.
- ▶ Close the rotating screen (1) and lock with the snap locks (2).

26.4 Draining coolant

The drain cock is located at the back on the left side of the machine.

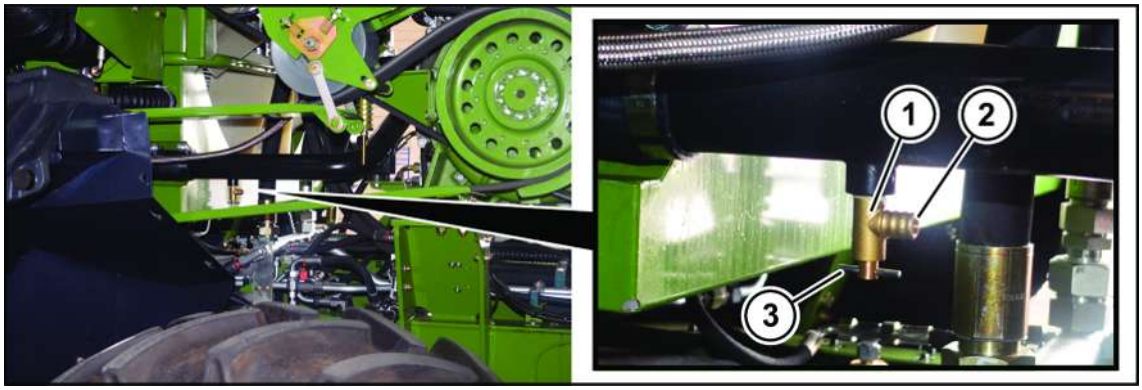

BXG000-034

- ✓ The left side hood is open.
- ✓ The maintenance flap behind the wheel has been removed.
- ▶ Place a suitable container under the drain cock (1).
- ▶ Connect a suitable hose to the hose connector (3).
- ▶ Open the drain cock with the rotary knob (2) and drain the coolant.
- ▶ Close the drain cock with the rotary knob (2) and remove the hose.

26.5 Maintaining chassis

26.5.1 Checking attachment of steering cylinder

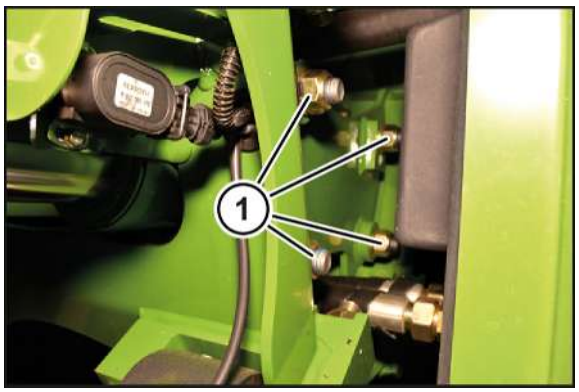

BMG000-021

Check the screws of steering cylinder with the following tightening torques:

- The screws (1) of the steering cylinder are mounted to a tightening torque of 730 Nm.

26.5.2 Checking fitting of track rod

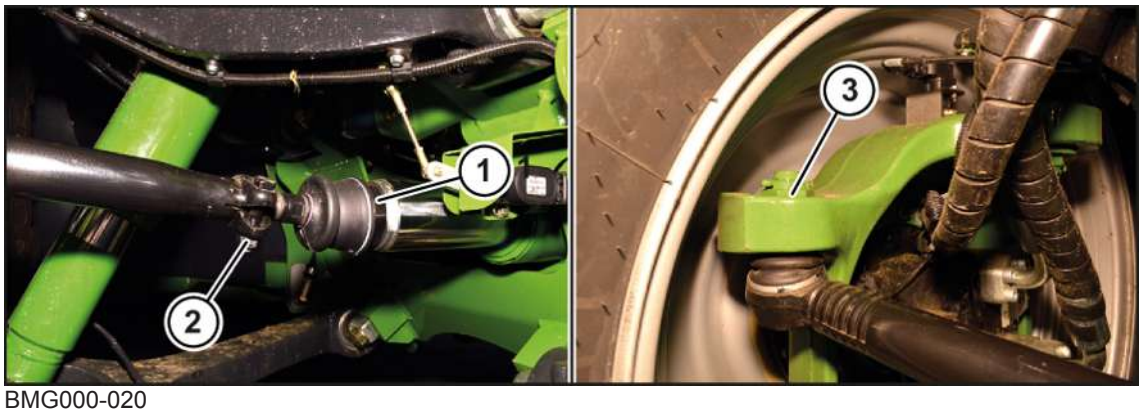

BMG000-020

Check the screw of track rod with the following tightening torques:

- The axial ball joint (1) is fitted to the piston rod of the steering cylinder at a tightening torque of 350 Nm.
- The clamping screw (2) of the track rod is mounted with a tightening torque of 70 +20 Nm.
- The castle nut (3) of the track rod head is mounted with a tightening torque of 450 +50 Nm and secured by means of a cotter pin.

26.5.3 Checking the hub cover of the rear axle, with front wheel drive version

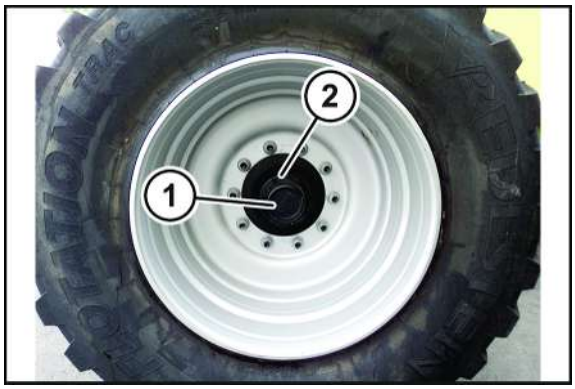

BM000-270

Check the hub covers (1) for damage and tight fit:

- Replace lost or worn hub covers (1) immediately to prevent dirt entering the interior of the hub and damaging the bearing.

If a hub cover is missing or if a hub cover is dismounted, the seal must be replaced before a new installation.

Check the screws of the hub covers:

- Shut down and secure the machine, *refer to page 34*.
- Make sure the hub covers have been mounted correctly and are in a perfect state.
- Check the screws of the hub cover for tight fit.

26.5.4 Checking the hub bearing of the rear axle, for the front-wheel drive version

The hub bearings of the rear axle are subject to wear. The lifetime of the bearings depends on the working conditions, load, speed, setting and lubrication of the bearings.

Checking the hub bearing of the wheels for wear:

- Shut down and secure the machine, *refer to page 34*.
- Raise the rear axle until the wheels no longer have contact with the ground
- Turn the wheels one after the other in both directions to determine possible hard stops or resistance.
- Quickly turn the wheels one after the other to detect any noises, vibrations or impacts.
  - ⇨ Wear is determined at a hub bearing.
  - Replace the hub bearing and all oil seals.

Determine the bearing clearance of the hubs:

- Shut down and secure the machine, *refer to page 34*.
- Raise the rear axle until the wheels no longer have contact with the ground
- Take hold of the wheel from the top and bottom and check the clearance by carrying out a wobble test. (To check the clearance, it might be helpful to use a lever between the wheel and ground.)
- Make sure the clearance does not originate from the suspension or the steering knuckles.
  - ⇨ Clearance is determined at a hub bearing.

- Have a qualified service centre set the bearing clearance.

26.5.5 Checking attachment of wheel hub gearbox

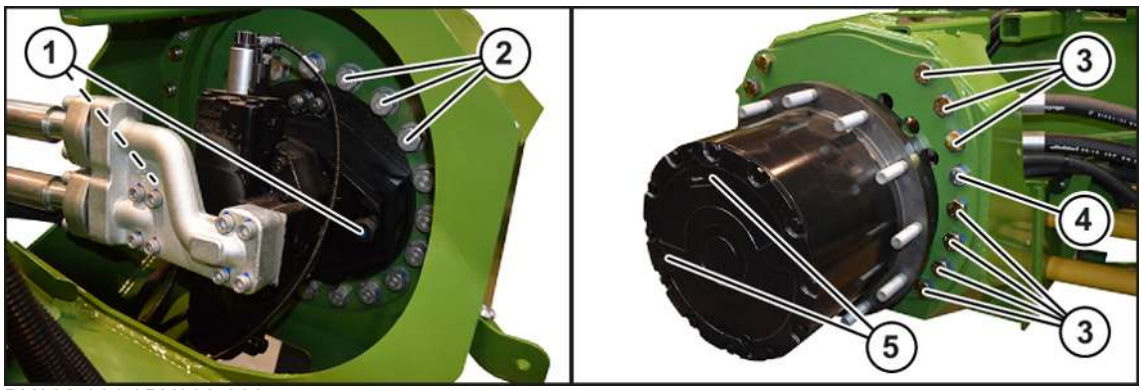

BX002-021 / BX002-020

Test the screws of the wheel hub gearbox at the front axle on both sides of the machine with the following tightening torques:

- Test the 2 screws (1) connecting the wheel hub gearbox and the adjusting motor with a tightening torque of 415 Nm.
- Test the 20 screws (2) connecting the wheel hub gearbox and the adapter plates with a tightening torque of 610 Nm.
- Test the 14 M22 screws (3) connecting the adapter plates and the vehicle frame with a tightening torque of 550 Nm.
- Test the 2 M20 screws (4) connecting the adapter plates and the vehicle frame with a tightening torque of 410 Nm.
- Test the 2 screws (5) of the oil holes with a tightening torque of 65 Nm.

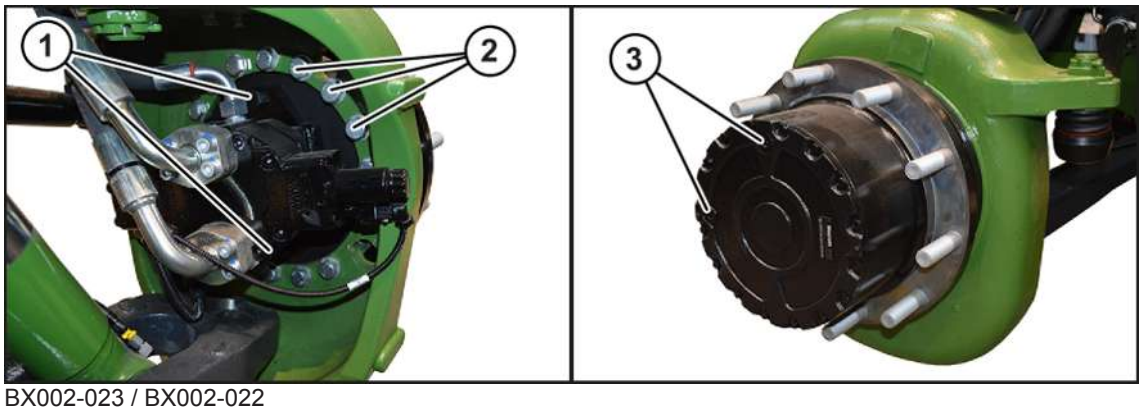

BX002-023 / BX002-022

Test the screws of the wheel hub gearbox at the rear axle on both sides of the machine with the following tightening torques:

- Test the 2 screws (1) connecting the wheel hub gearbox and the adjusting motor with a tightening torque of 230 Nm.
- Test the 18 screws (2) connecting the wheel hub gearbox and the steering knuckle with a tightening torque of 210 Nm.
- Test the 2 screws (3) of the oil holes with a tightening torque of 65 Nm.

26.6 Maintaining brake (Bosch)

NOTICE

Failure of the service brake caused by malfunctions of brake as well as thermal overload

If malfunctions occur or there is a thermal overload, the multi-disc brake may fail.

- ▶ After a malfunction or thermal overload, always replace the blades, springs and sealing elements.
- ▶ If repairs are required due to malfunctions or thermal overload, they may be performed by trained personnel or employees of the BOSCH-REXROTH service department only.
- ⇨ BOSCH-REXROTH will accept no liability for any damage which occurs due to non-compliance with these instructions.

NOTICE

Damage to the multi-disc brake

If the outer and inner discs of the multi-disc brake are replaced during maintenance/repair work but are not wetted with lubricating oil prior to installation, the discs, which have not been wetted with a film of lubricating oil, may become severely worn when the brakes are directly applied. This may cause the multi-disc brake to fail.

- ▶ When repairing the multi-disc brake, generally replace the entire multi-disc pack, the springs and the sealing elements. It is not permitted to replace individual discs.
- ▶ Prior to installation, wet all replaced discs with lubricating oil according to the enclosed lubricating oil recommendation.
- ▶ Ensure that the discs are completely wetted with a film of lubricating oil.

Daily or before moving off

- ▶ Always check the function of the service brake before moving off, *refer to page 84*.

Checking within the limits of the national regulations:

- ▶ Regularly check the function of the multi-disc brake according to the national regulations.

This check can be conducted for example during a TÜV vehicle inspection. Also test the braking deceleration. The target value must correspond with the vehicle specification.

After emergency braking

Irrespective of the maintenance intervals, the brake must be completely inspected following emergency braking when the hydrostats have failed.

- ▶ Contact KRONE customer service.

26.7 Maintaining belt drives

Overview of belt drives

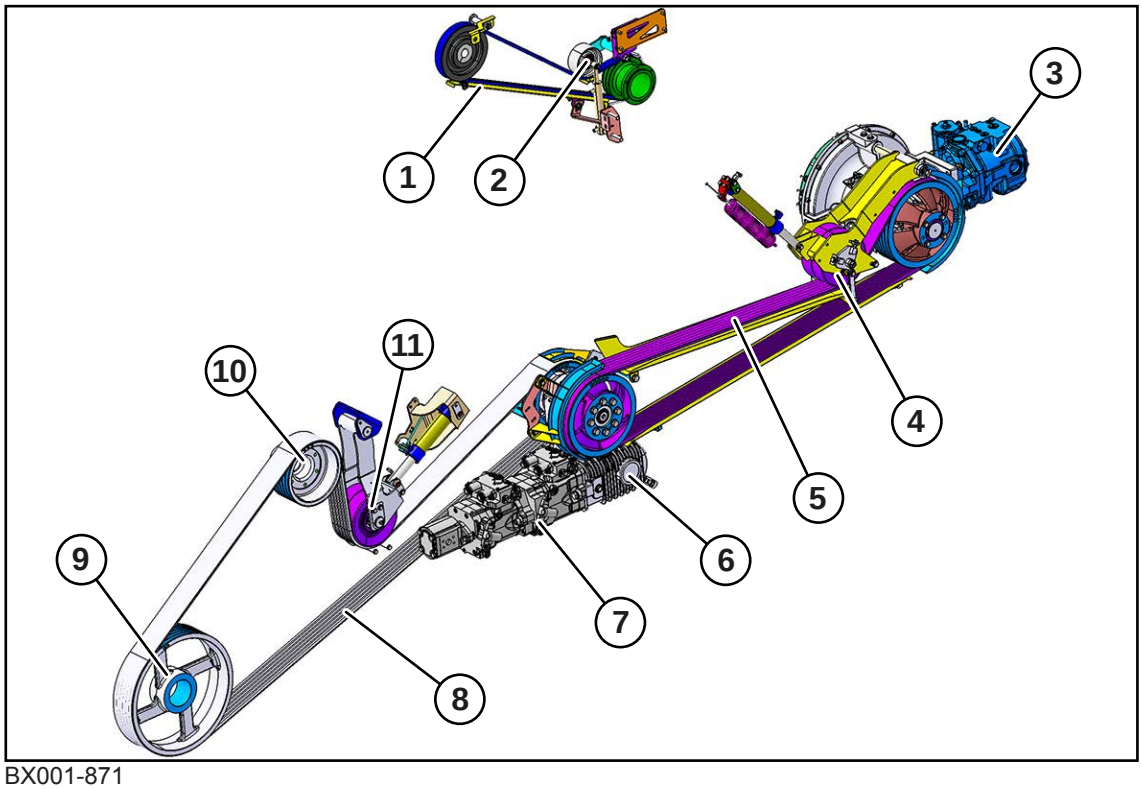

BX001-871

1	Belt drive engine output fan	7	Hydraulic pump intake/header
2	Belt tensioner fan drive	8	Belt drive for intermediate gearbox cutter drum
3	Drive pump	9	Chopping drum
4	Belt tensioner for belt drive of engine output intermediate gearbox	10	Discharge accelerator
5	Belt drive for engine output intermediate gearbox	11	Belt tensioner for belt drive of intermediate gearbox cutter drum
6	Intermediate gearbox		

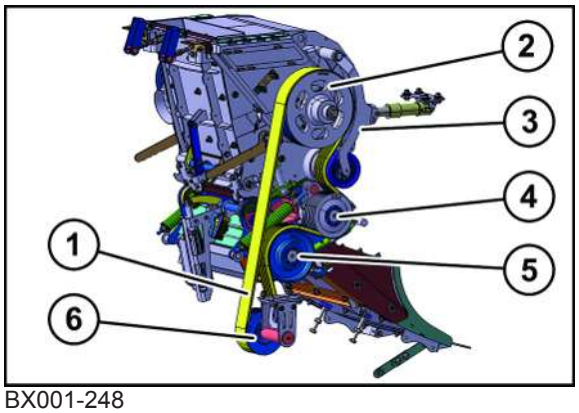

BX001-248

1	Corn conditioner belt drive	4	Belt pulley "Roller at front"
2	Belt pulley discharge accelerator	5	Deflection roll "Roller at rear"
3	Belt tensioner for corn conditioner	6	Belt pulley deflection

Slackening drive belt of intermediate gearbox cutter drum and drive belt of corn conditioner

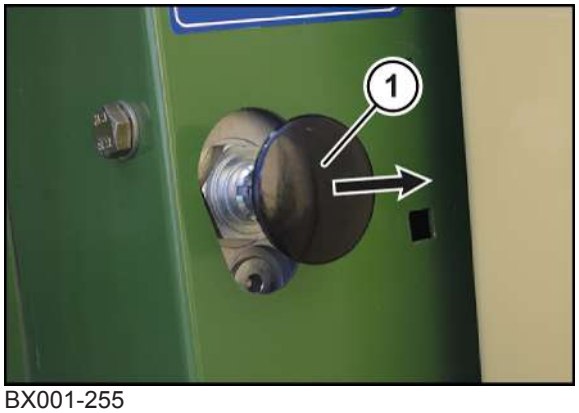

BX001-255

The relief button (1) is located on the right side of the ladder. The tensioning arms of the belt drives are relieved by pressing the relief button.

- To be able to press the belt tensioner easily forwards, pull and hold the relief button (1) and simultaneously press the belt tensioner all the way forwards.

The belt tensioners can be pushed back.

26.7.1 Checking kraftband

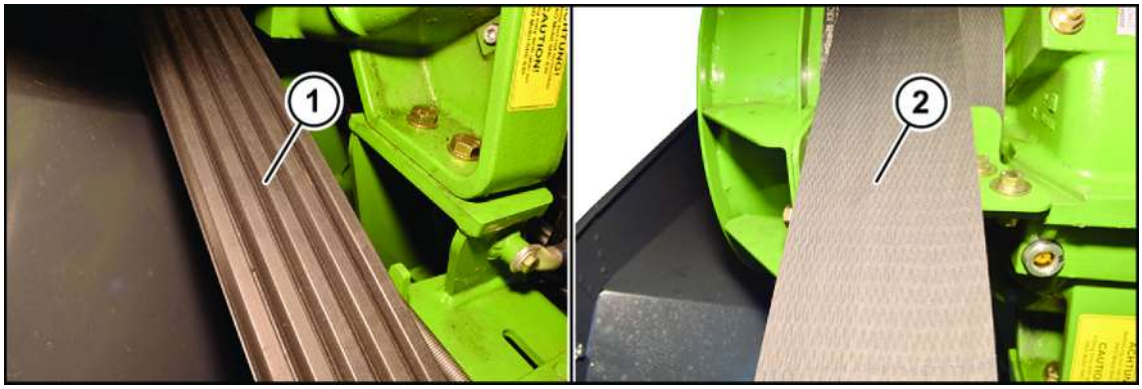

BX001-250

> ***INFORMATION***
>
> If worn or soiled, the complete power transmission of the kraftband and pulley is not guaranteed.

- Visually check the kraftbands on the inside (1) and outside (2) for wear and damage (e.g. tears, stones) and replace if required.
- Check each kraftband for soiling (oil, grease) and clean or replace it, if necessary.

26.7.2 Checking pulley

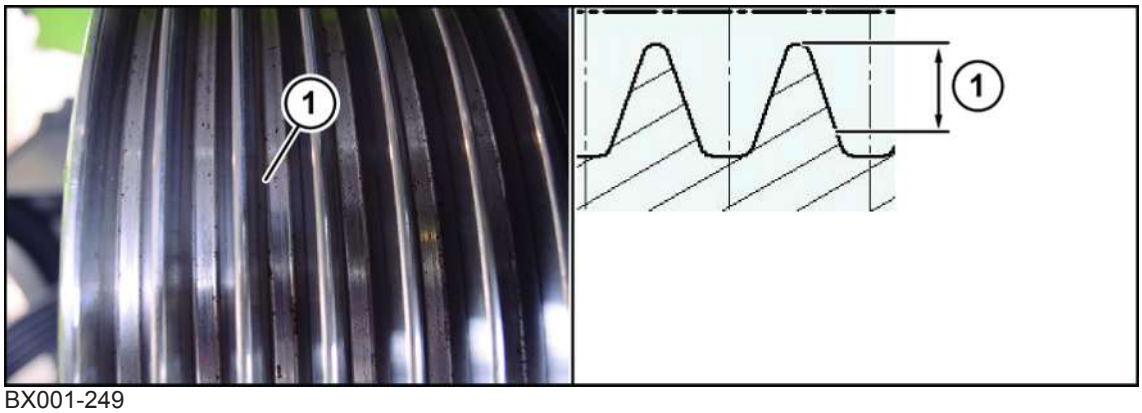

BX001-249

> ***INFORMATION***
>
> If worn or soiled, the complete power transmission of the kraftband and pulley is not guaranteed.

- ▶ Check the edges of the pulley (1) for wear and, if required, have them replaced by your KRONE service partner.
- ▶ Check the pulley (1) for damage and replace if required.
- ▶ Check the pulley (1) for soiling (oil, grease) and clean if required.

26.8 Maintaining tyres and wheels

26.8.1 Checking/maintaining tyres

✓ The machine is shut down and safeguarded, *refer to page 34*.

Inspect the tyres visually

- ▶ Visually inspect tyres for cuts or breaks.
- ➡ If there are cuts or breaks in the tyres, have the tyres repaired or replaced by a KRONE service partner.

Maintenance intervals for visual inspection of the tyres, *refer to page 414*.

Checking/adapting the tyre pressure

- ▶ Check the tyre pressure, *refer to page 71*.
- ➡ If the tyre pressure is too high, deflate air.
- ➡ If the tyre pressure is too low, increase the tyre pressure.

Check the maintenance intervals for tyre pressure, *refer to page 414*.

26.8.2 Retighten wheel nuts

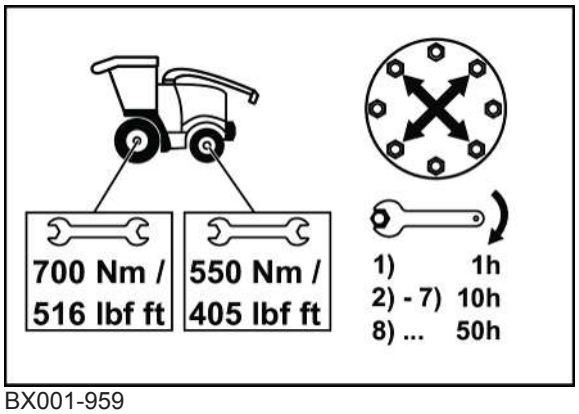

BX001-959

- Retighten the nuts for attaching the wheels crosswise
- Retighten the nuts on the front axle to 700 Nm.
- Retighten the nuts on the rear axle to 550 Nm.

Intervals at which the nuts on the wheels must be tightened, *refer to page 414*.

26.8.3 Running direction of tyres

INFORMATION

If machines have front wheel drive only, the left and right tyres on the rear axle are deliberately interchanged for reasons of traction. (The left wheel is mounted on the right and the right wheel is mounted on the left.)

26.8.4 Changing tyre size

INFORMATION

Before switching the tyre size when changing the tyres, check beforehand the reliability of the new tyre size for the vehicle and adjust parameters in the terminal. To do this, contact KRONE customer service.

26.9 Maintaining tow coupling

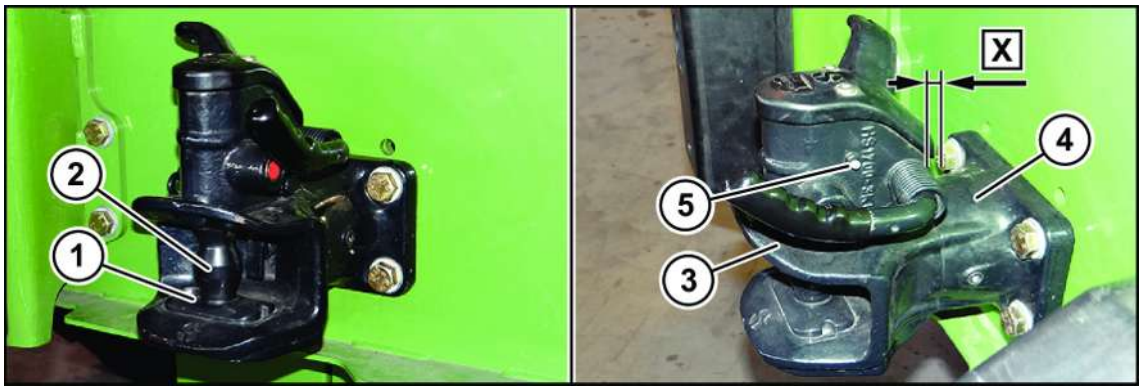

BX001-258

Maintenance work on the tow coupling:

Wear plate:

- Check the thickness of the wear plate (1).

If the wear plate is thinner than 6 mm:

  - Have the wear plate replaced by a specialist workshop.

Coupling bolt:

- Check the diameter of the coupling bolt at the thickest point.

If the diameter of the coupling bolt is less than 37 mm:

  - Have the coupling bolt replaced by a specialist workshop.

Coupling gap:

- Check the degree of wear of the coupling gap.

If the coupling gap is worn by more than 1.5 mm or the gap (a) between the coupling jaw (3) and the coupling carrier (4) is greater than 3 mm at any point:

  - Replace tow coupling.

BX001-259

- Check the turning capacity of the coupling jaw (3).

If the coupling jaw (3) is stiff:

  - Loosen the screw (5).
  - Lubricate the grease nipple (6).
  - Turn the connecting jaw (3) by one turn and tighten the screw (5) to a torque of 35 – 50 Nm.

26.10 Checking the fire extinguisher

BPG000-034

✓ The machine is shut down and safeguarded, *refer to page 34*.

- Ensure that the fire extinguisher (1) is mounted on the machine.
- Ensure that access to and view of the fire extinguisher (1) are not obstructed.
- Ensure that the fire extinguisher (1) is filled by weighing the fire extinguisher (1).
- Ensure that the seal on the extinguishing head and the security seal are neither defective nor missing.
- Ensure that the operating instructions on the type plate of the fire extinguisher (1) are legible and face outwards.
- Check the fire extinguisher for visible material damage, corrosion, leakage, a clogged hose and/or nozzle.
- Ensure that the pressure gauge pointer indicates the green area.

26.11 Cleaning the machine

⚠ *WARNING*

Eye damage caused by flying dirt particles!

When cleaning the machine with compressed air or with high-pressure cleaner, the dirt particles are slung away at high speed. The dirt particles may hit the eyes and hurt them.

- Keep persons away from working range.
- When performing cleaning work with compressed air or with high-pressure cleaner, wear suitable working clothes (for example eye protection).

NOTICE

Damage to the machine due to water damages with high-pressure cleaner

If the water jet from a high-pressure cleaner is aimed directly at bearings and electrical/electronic components, these parts can be damaged.

- Do not aim the water jet from high-pressure cleaner at bearings and electrics/electronic components.

✓ The machine is shut down and safeguarded, *refer to page 34*.

- After each use, remove husk and dust from the machine.

Under very dry working conditions, repeat the cleaning several times a day.

- For cleaning the engine compartment, *refer to page 431*.
- For cleaning the batteries, *refer to page 545*.
- For cleaning the cooler and the cooler compartment; *refer to page 455*.

27 Maintenance – Feed System

⚠ WARNING

Risk of injury due to non-observance of relevant safety notices

If the relevant safety notices are not observed, persons may get seriously injured or killed.

- To avoid accidents, the basic safety instructions must be read and observed, *refer to page 19*.

⚠ WARNING

Risk of injury due to non-observance of safety instructions

If the relevant safety routines are not observed, persons may be seriously injured or killed.

- The safety routines must be read and observed to avoid accidents, *refer to page 34*.

27.1 Removing intake unit with mounting cart

✓ The header is removed.

✓ The machine is shut down and safeguarded, *refer to page 34*.

Hydraulically relieve tension on the pendulum frame

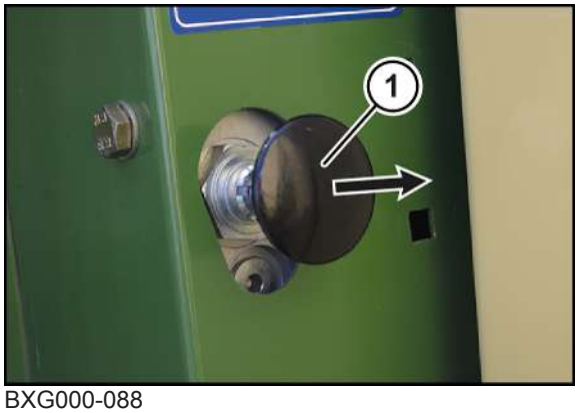

BXG000-088

The relief button (1) is located on the right side of the ladder. Tension is hydraulically relieved on the pendulum frame by pressing the relief button.

- To hydraulically relieve tension on the hydraulic system of the pendulum frame, pull the relief button (1) and let it go again.

Switching over to working mode

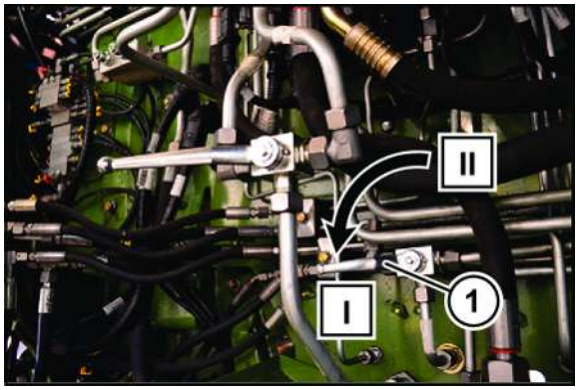

BX001-266

The three-way ball cock (1) for switching between working and maintenance mode is located under the left side hood.

- Position I = working mode
- Position II = maintenance mode

▶ Move the three-way ball cock to position I for working mode.

Removing universal shaft

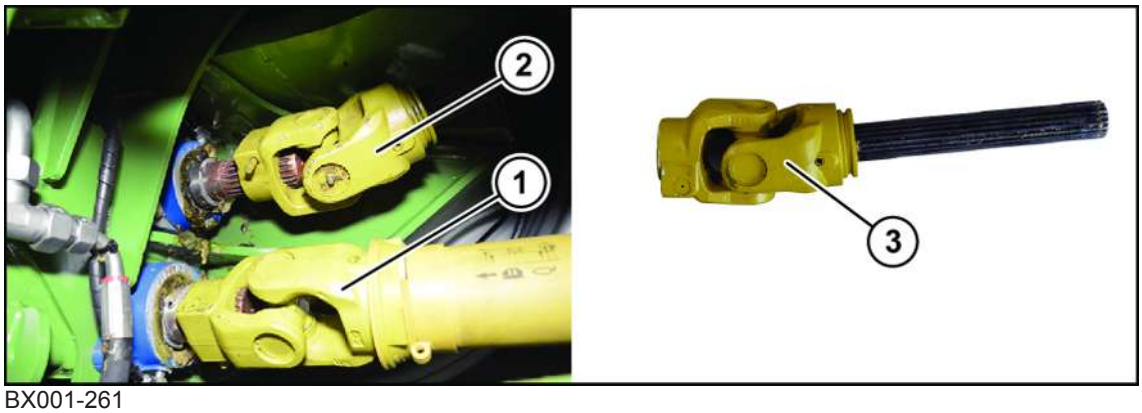

BX001-261

▶ Remove the lower universal shaft (1) on the forage harvester side.

▶ Remove the upper universal shaft (2) on the forage harvester side, pull the universal shaft half (3) out of the universal shaft and put it to one side.

Disconnecting cables and lines

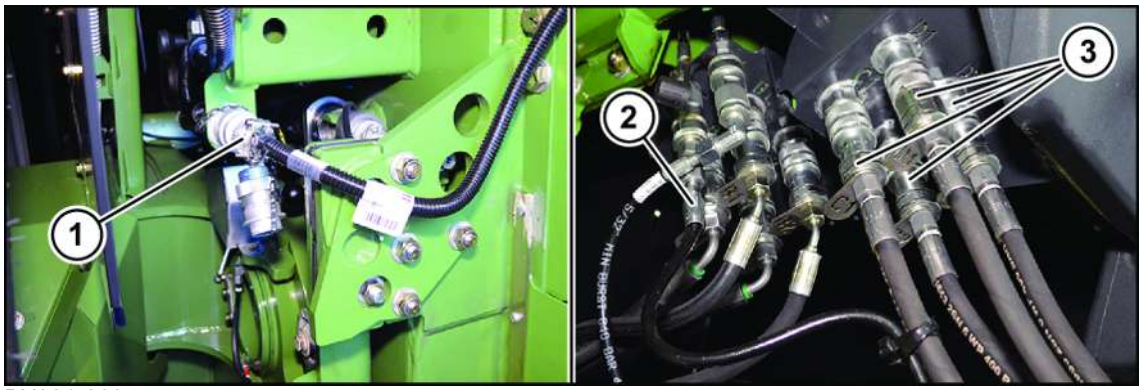

BX001-263

Right-hand machine side

- ▶ Separate the plug connection (1) and mount the dummy plug on both sides.
- ▶ Lay the cable harness down on the intake unit and secure it against falling down.

Left-hand machine side

- ▶ Disconnect the lubrication line (2).
- ▶ Detach the hydraulic lines (3) (C1, C2, D1, D2).
- ▶ Insert the lubrication line (2) and the hydraulic lines (3) into hose support on the intake unit and lock it.

Placing intake unit on the mounting cart

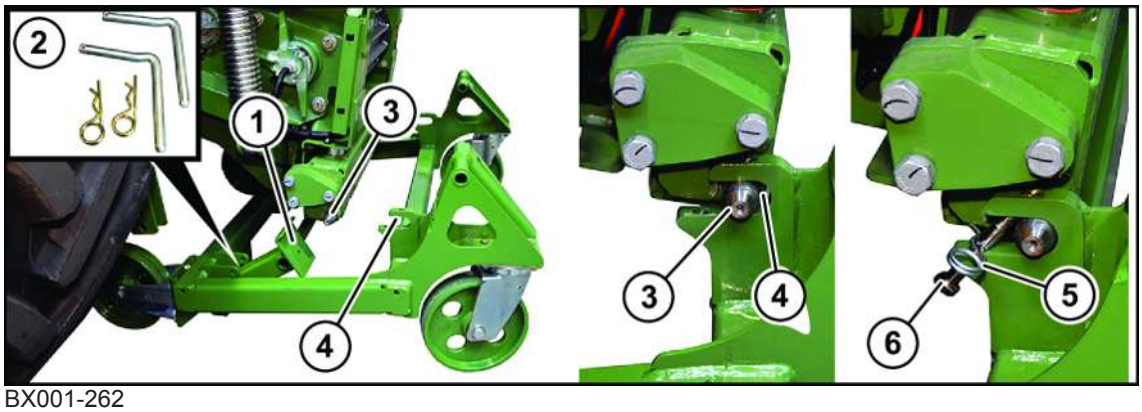

BX001-262

- ✓ The holder (1) of the mounting cart is swivelled down, the securing pins and the spring cotter pins (2) have been put to one side, on the right and left.
- ✓ Remove the cotter pins (5) and the bolts (6).
- ▶ Push the mounting cart centred in front of the intake unit.
- ▶ Lower the lifting unit with the keys of the grinding control unit until the locking pins (3) are centred in front of the holders (4).
- ▶ Slide the mounting cart onto the locking pins and secure with bolt (6) and cotter pins (5).

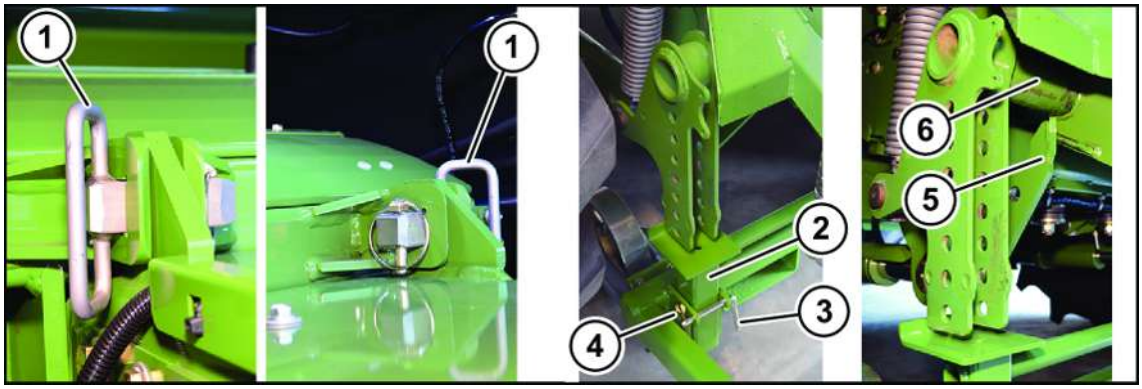

BXG000-102

- Lower the lifting unit using the keys on the grinding control unit until the locking pins (1) have been relieved.
- Pull out the locking pins (1) and set them aside.
- Raise the lifting unit until the support (2) of the mounting cart can be folded up.
- Fold up the support and secure with bolt (3) and spring cotter pin (4), on the right and left.
- Lower the lifting unit until the holding claw (5) is under the support device (6).

Push out the intake unit forwards and store in a safe place for subsequent reinstallation.

27.2 Mounting intake unit with installation cart

Lowering chopper unit without attached intake

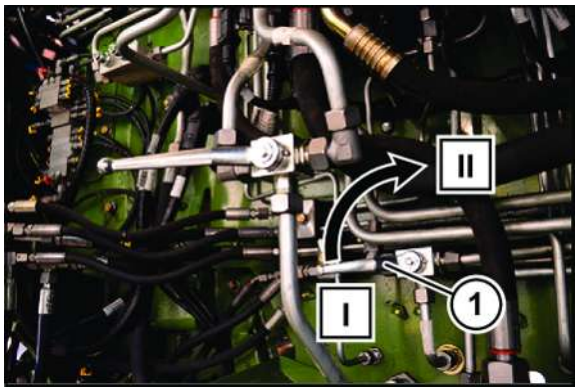

BX001-265

The three-way ball cock (1) for switching between working and maintenance mode is located under the left side hood.

- Position I = working mode
- Position II = maintenance mode

- To be able to lower the chopper unit without the intake, move the three-way ball cock to position II.

The chopper unit can be lowered.

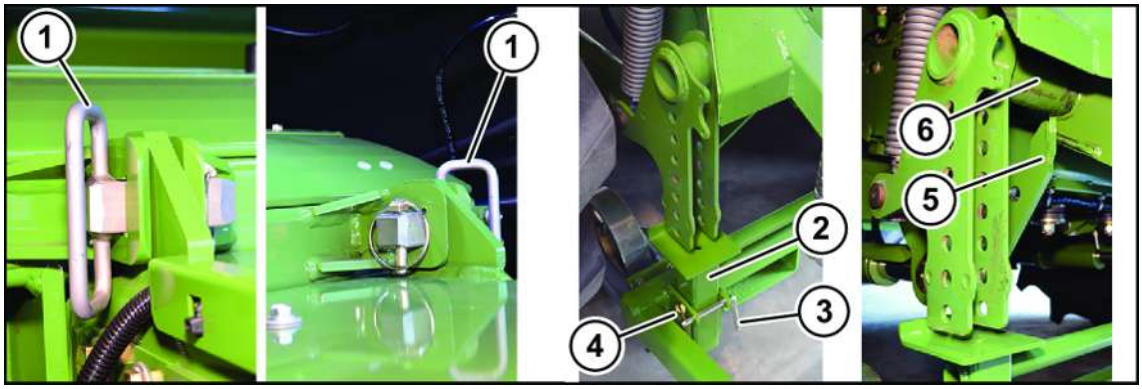

BXG000-102

- Lower the lifting unit on the grinding control unit until the holding claw (5) is under the holding mechanism (6).
- Push the intake unit centred in front of the chopper unit.
- Raise the lifting unit until the support (2) of the mounting cart can be folded down.

WARNING! Risk of injury; if the holding claw (5) does not pick up the holding mechanism (6) correctly, the intake unit may fall down. Ensure that the holding mechanism is held securely in the holding claw.

- Pull out the spring cotter pin (4) and remove the bolts (3) on the right and left.
- Fold down the support (2).
- Lower the lifting unit until the locking pins (1) can be inserted.
- Insert and secure the locking pins (1).

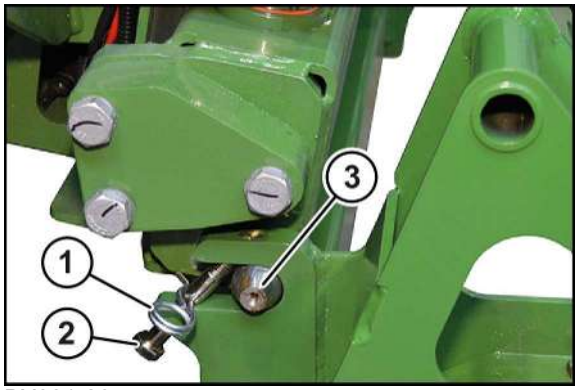

BX001-267

- Remove the cotter pins (1) and bolts (2) from the mounting cart.
- Raise or lower the lifting unit so that the mounting cart can be pushed down off the locking pins (3).
- Push out the mounting cart forwards and store in a safe place for subsequent re-installation.

Connecting the cables and lines

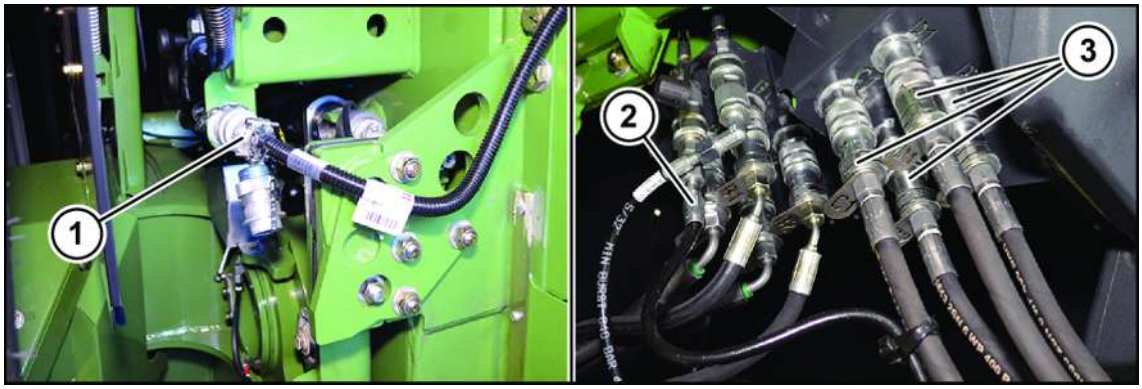

BX001-263

Right-hand machine side

- Establish the plug connection (1).

Left-hand machine side

- Unlock the locking of the hose support on the intake unit.
- Clean the coupling sleeves and coupling plugs of the lubrication line (2).
- Connect the lubrication line (2). In doing so, tighten the screw connection until the stop is reached.
- Clean the coupling sleeves and coupling plugs of the hydraulic lines (3).
- Connect the hydraulic lines (3) (C1,C2,D1,D2).

Mounting universal shafts

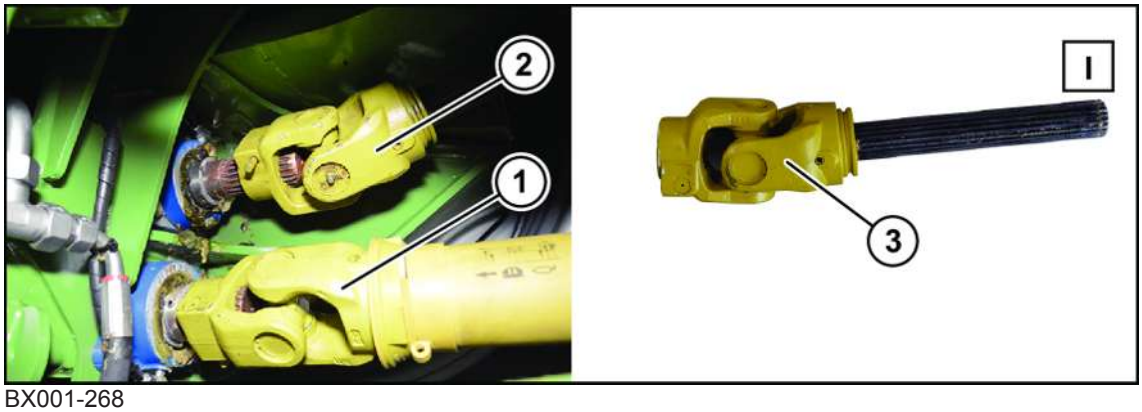

BX001-268

Universal shaft halves can only be pushed together in one position. Observe the marking (I) on the universal shaft!

- Insert the universal shaft half (3) into the upper universal shaft (2).
- Attach the upper universal shaft on the forage harvester side until the slider pin engages.
- Attach the lower universal shaft (1) on the forage harvester side until the slider pin engages.

Switching over to working mode

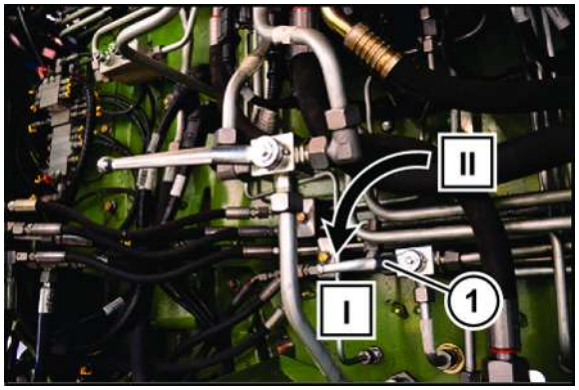

BX001-266

The three-way ball cock (1) for switching between working and maintenance mode is located under the left side hood.

- Position I = working mode
- Position II = maintenance mode

▶ Move the three-way ball cock to position I for working mode.

27.3 Removing intake unit with header

For the "EasyFlow" version

✓ The EasyFlow is situated on a solid and level surface with the support jacks extended and the supporting wheels unfolded, see operating instructions for EasyFlow "Removing the machine".

✓ The machine is shut down and safeguarded, *refer to page 34*.

Hydraulically relieve tension on the pendulum frame

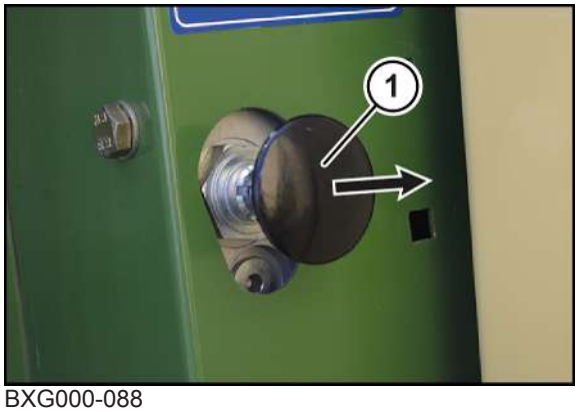

BXG000-088

The relief button (1) is located on the right side of the ladder. Tension is hydraulically relieved on the pendulum frame by pressing the relief button.

▶ To hydraulically relieve tension on the hydraulic system of the pendulum frame, pull the relief button (1) and let it go again.

Removing universal shaft

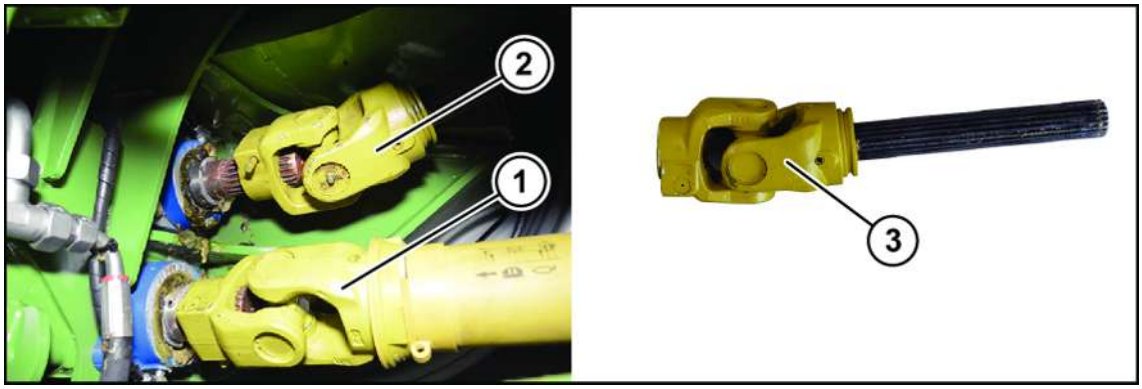

BX001-261

- Remove the lower universal shaft (1) on the forage harvester side.
- Remove the upper universal shaft (2) on the forage harvester side, pull the universal shaft half (3) out of the universal shaft and put it to one side.

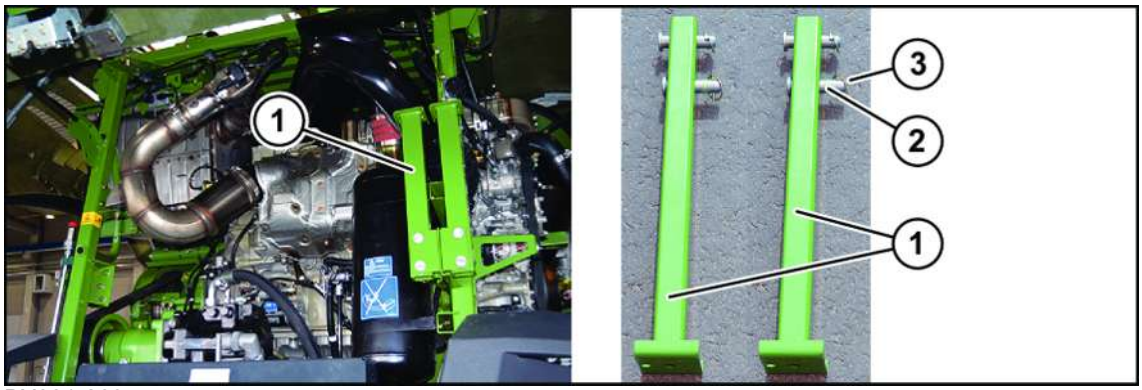

BX001-269

The parking supports (1) to support the intake unit are located behind the tailgate, on the right on the engine frame.

- Open the tailgate.
- Remove the parking supports and place them next to the intake unit.
- Close the tailgate.

Disconnecting cables and lines

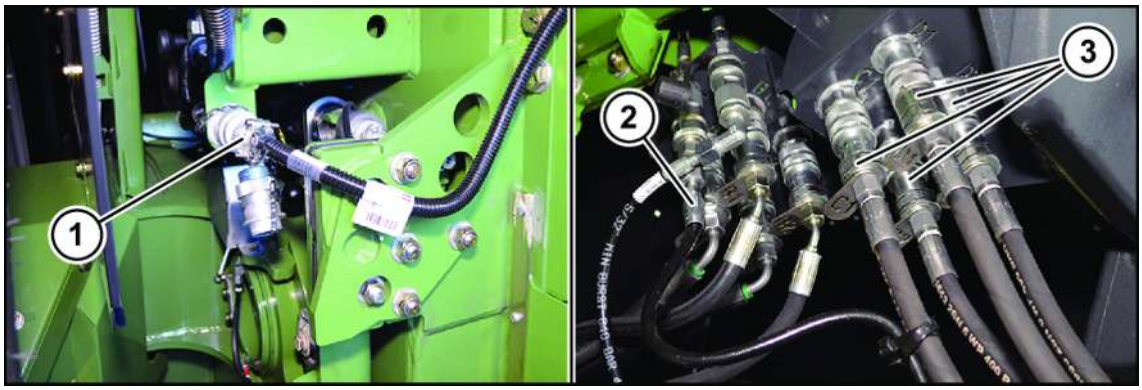

BX001-263

Right-hand machine side

- Separate the plug connection (1) and mount the dummy plug on both sides.
- Lay the cable harness down on the intake unit and secure it against falling down.

Left-hand machine side

- Disconnect the lubrication line (2).
- Detach the hydraulic lines (3) (C1, C2, D1, D2).
- Insert the lubrication line (2) and the hydraulic lines (3) into hose support on the intake unit and lock it.

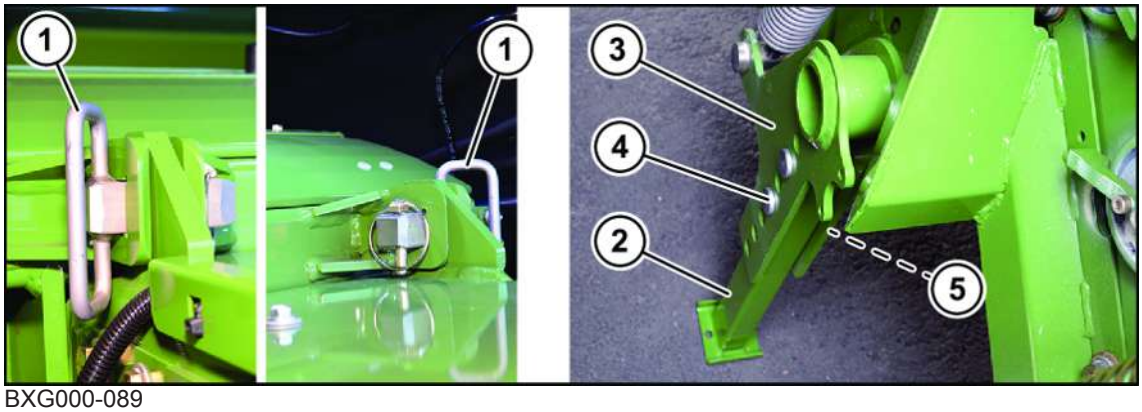

BXG000-089

- Lower the lifting unit on the grinding control unit until the locking pins (1) have been relieved.
- Pull out the locking pins (1) and set them aside.
- Raise the lifting unit until the support jacks (2) can be fitted.
- Attach the support jacks to the perforated bars (3) of the intake unit with the bolts (4) and secure the bolts with the linch pins (5).
- Lower the lifting unit until the intake unit is on the support jacks.

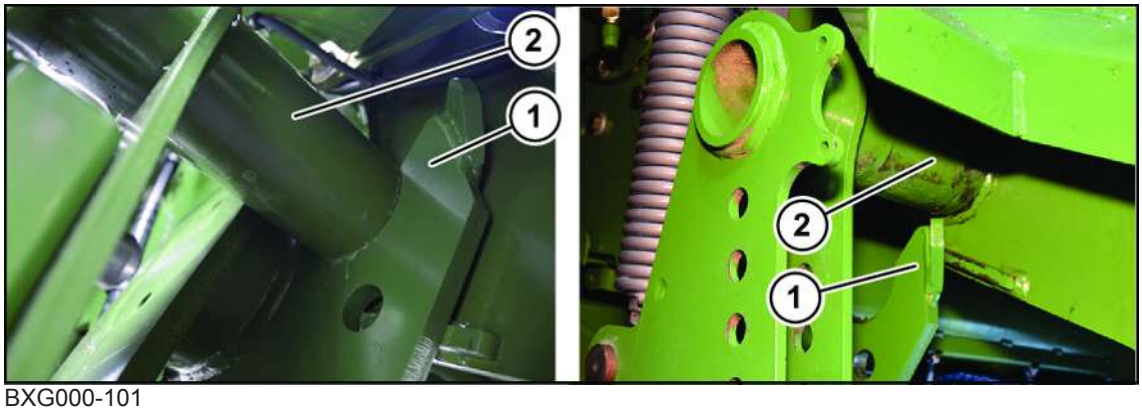

BXG000-101

- Lower the lifting unit until the holding claw (1) is under the support device (2).
- Move backward carefully with the forage harvester.

27.4 Mounting intake unit with header

Lowering chopper unit without attached intake

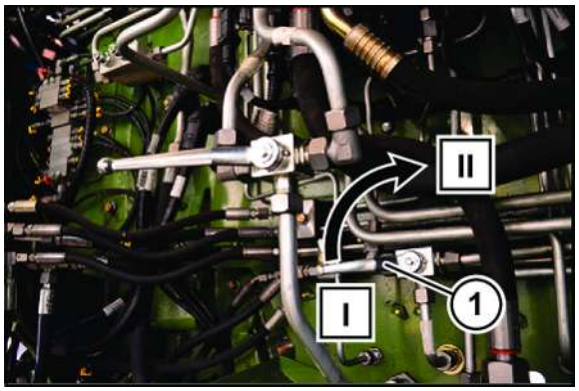

BX001-265

The three-way ball cock (1) for switching between working and maintenance mode is located under the left side hood.

- Position I = working mode
- Position II = maintenance mode

▶ To be able to lower the chopper unit without the intake, move the three-way ball cock to position II.

The chopper unit can be lowered.

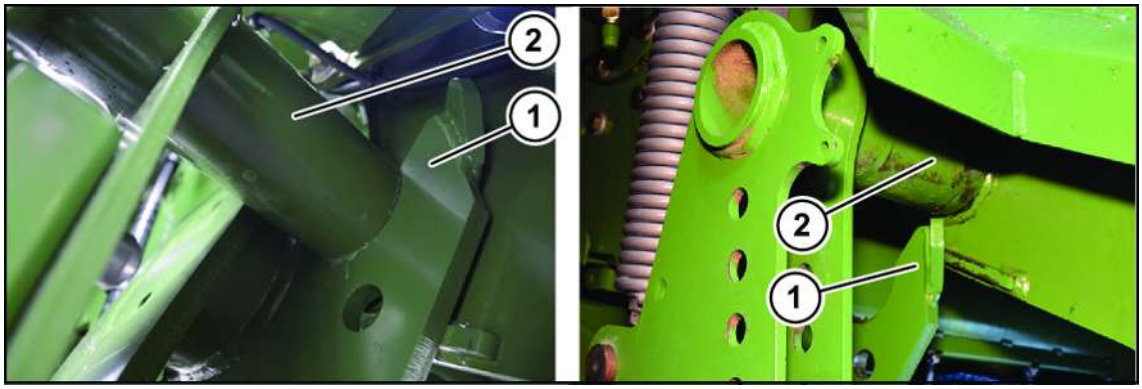

BXG000-101

▶ Lower the lifting unit until the holding claw (1) is under the support device (2).

▶ Move the forage harvester carefully centred in front of the intake unit.

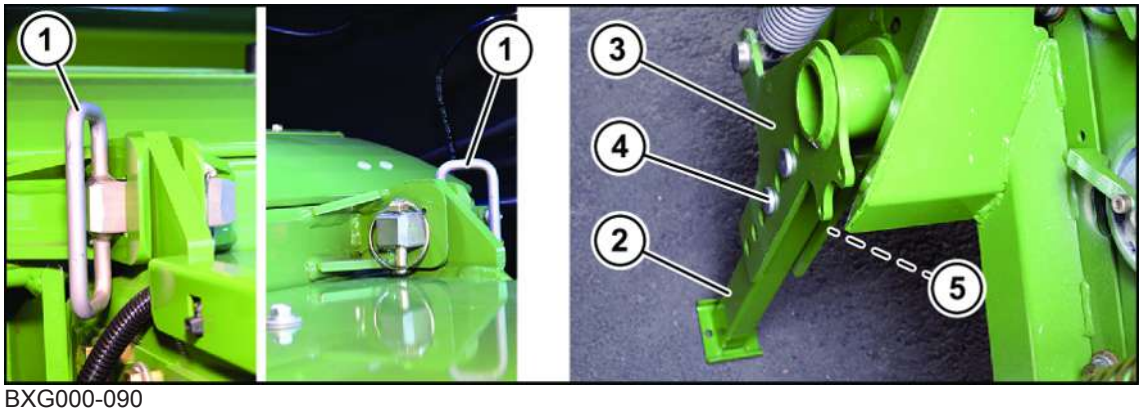

BXG000-090

Raise the lifting unit until the support jacks (2) can be removed.

- Remove the support jacks from the perforated bars (3) of the intake unit and put to one side.
- Lower the lifting unit until the locking pins (1) can be inserted.
- Insert and secure the locking pins (1).

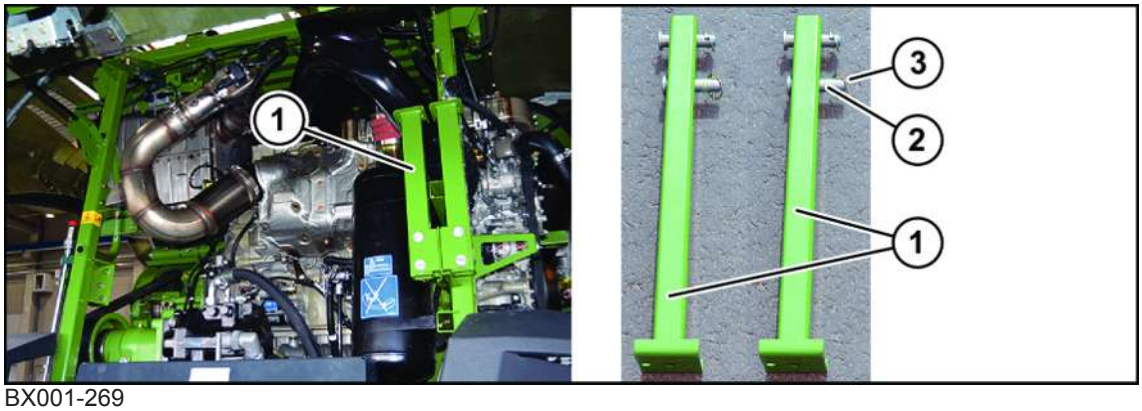

BX001-269

The suspension for the parking supports (1) is located behind the tailgate on the right on the engine frame.

- Open the tailgate.
- Hook the parking supports (1) into the suspension of the engine frame and secure with bolts (2) and linch pins (3).
- Close the tailgate.

Connecting the cables and lines

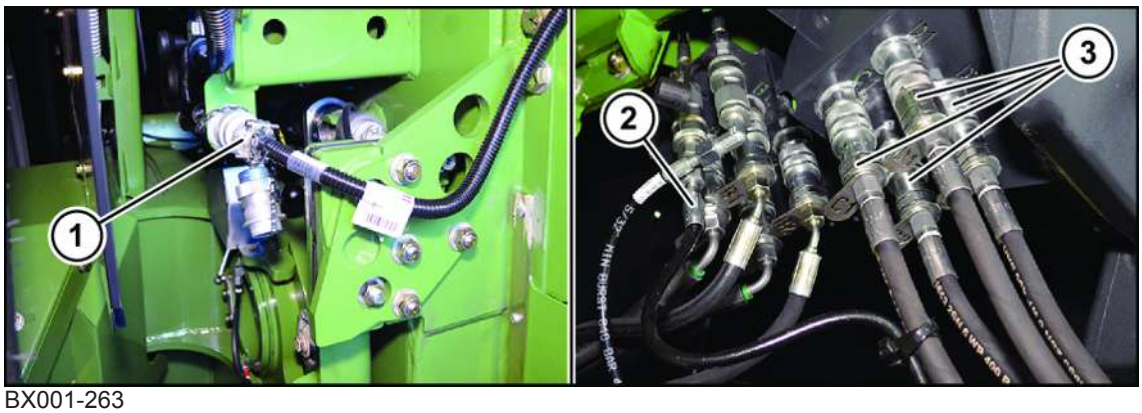

BX001-263

Right-hand machine side

- Establish the plug connection (1).

Left-hand machine side

- Unlock the locking of the hose support on the intake unit.
- Clean the coupling sleeves and coupling plugs of the lubrication line (2).
- Connect the lubrication line (2). In doing so, tighten the screw connection until the stop is reached.
- Clean the coupling sleeves and coupling plugs of the hydraulic lines (3).
- Connect the hydraulic lines (3) (C1,C2,D1,D2).

Mounting universal shafts

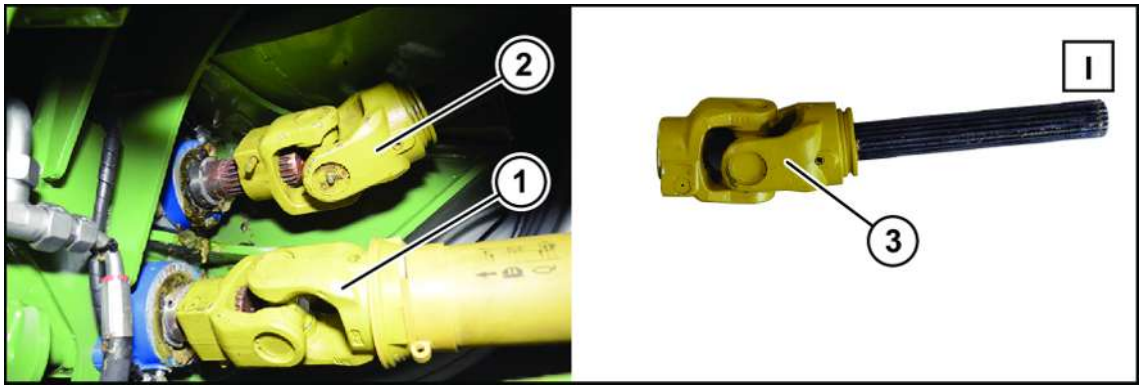

BX001-268

Universal shaft halves can only be pushed together in one position. Observe the marking (I) on the universal shaft!

- ▶ Insert the universal shaft half (3) into the upper universal shaft (2).
- ▶ Attach the upper universal shaft on the forage harvester side until the slider pin engages.
- ▶ Attach the lower universal shaft (1) on the forage harvester side until the slider pin engages.

Switching over to working mode

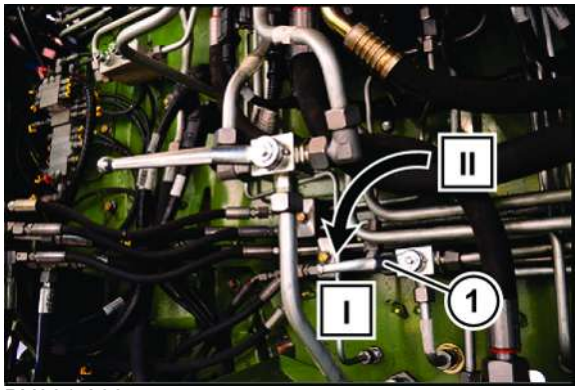

BX001-266

The three-way ball cock (1) for switching between working and maintenance mode is located under the left side hood.

- Position I = working mode
- Position II = maintenance mode
- ▶ Move the three-way ball cock to position I for working mode.

27.5 Grinding chopping blades

⚠ WARNING

Risk of injury from exposed, rotating chopping drum

The chopping blade can be ground only when the chopping drum is rotating. During the grinding process not all rotating parts of the chopping drum and drive can be completely encased. This means there is an increased risk of injury.

- ▶ During the grinding process ensure that all other safety devices are in the protective position and that all maintenance openings are closed.
- ▶ During the grinding process the operator must be either on the driver's seat in the cabin or in the area of the grinding control unit on the left next to the platform.
- ▶ During the grinding process ensure that nobody is in the area of the chopping drum or reaches into the rotating chopping blades.

⚠ WARNING

Risk of injury from sharp chopping blades and sharp screw bars (for version with MaxFlow chopping drum)

When performing maintenance work on the chopping drum, there is a risk of the operators being injured by the sharp chopping blades or the sharp screw bars.

- ▶ When working on the chopping drum, work particularly carefully and prudently.
- ▶ Wear protective gloves when working on the chopping drum.
- ▶ Turn the chopping drum clockwise using the chopping drum turning lever only *refer to page 495* and, when the required position has been reached, lock with the locking bolt, *refer to page 495*.

⚠ WARNING

Risk of fire due to deposits in the grinding channel

A mixture of dust, grass and chaff in the grinding channel is a source of fire and means an increased fire risk during the grinding process.

- ▶ Before grinding the chopping blades, check the automatic readjustment of the grinding stone and clean the grinding channel.

NOTICE

Damage to the grinding stone due to water retention

The grinding stone must not become wet, as water retention in freezing temperatures will cause the grinding stone to break during the grinding process.

- ▶ Do not wet the grinding stone with water.
- ▶ Open the cover hood for maintenance work only, otherwise keep it closed.

Frequency and duration of the grinding process for chopping blades:

Dull cutting blades and too great a distance between the cutting blade and the counterblade will result in an unnecessarily high power demand, poor chop quality and high wear on the cutting elements.

Therefore the worn cutting blades must be ground with the grinding device of the forage harvester and then the counterblade must be re-adjusted.

The frequency and the duration of the grinding process depend on the application conditions. In principle, short grinding intervals with a short grinding duration and corresponding counterblade adjustment are recommended.

- To ensure that the cutting blades for the maize operation achieve a very good self-sharpening effect, they must not be "fully ground", i.e. the blade should not be ground down to the cutting edge. This will cause the base material to wear more quickly than the coating and an aggressive cutting edge will be formed, the so-called "mouse tooth".
- On account of the application conditions, the self-sharpening effect of the cutting blades for grass operation is difficult to achieve, as is the case with the cutting blades for maize operation. The blades must therefore be "fully ground", i.e. the blade should be ground down to the cutting edge.

Before grinding the cutting blades, check the automatic re-adjustment of the grinding stone and clean the grinding channel.

27.5.1 Grinding the chopping blades when intake is not mounted

⚠ *WARNING*

Risk of injury from exposed, rotating chopping drum.

When grinding the chopping blades, there is a risk of injury in particular if the grinding process is performed without intake. There is an increased risk of injury due to the chopping drum which is not running with cover.

- ▶ Close off the area in front of the machine well visible.
- ▶ Warn all persons in the proximity against the open running chopping drum and the relevant dangers before starting grinding.
- ▶ During the grinding process ensure that nobody is in the area of the chopping drum or reaches into the rotating chopping blades.

The chopping blades must be ground when a set of blades is readjusted on the chopping drum. It may be useful to operate the chopping drum without mounted intake in order to make the evaluation of the chopping blade grinding pattern as simple as possible. To ensure that the unprotected chopping drum does not start unintentionally, a special start-up procedure is provided for this application for safety reasons.

- ✓ The intake has been removed.
- ✓ The machine has been secured against rolling away.
- ✓ The area in front of the machine, which is closed off, is clearly visible.
- ✓ People in the vicinity have been informed about the open running chopping drum and the associated risks.
- ✓ The diesel engine has been switched on.

To engage the chopping drum without intake:

- ▶ Set the main mode switch to the "Maintenance mode" position.
- ▶ Press the "Main coupling on" key on the keypad for at least 5 s.

An information message appears on the terminal and the follow-up alarm is heard.

- ▶ Release the "Main coupling on" key and comply with the information message.
- ▶ Press the "Main coupling on" key for at least 2 s.

The chopping drum is engaged and the follow-up alarm stops.

The grinding process can be performed as described in chapter Maintenance - Feed System "Grinding the Chopping Blades", *refer to page 480*

27.5.2 Checking the grinding stone and cleaning the grinding channel

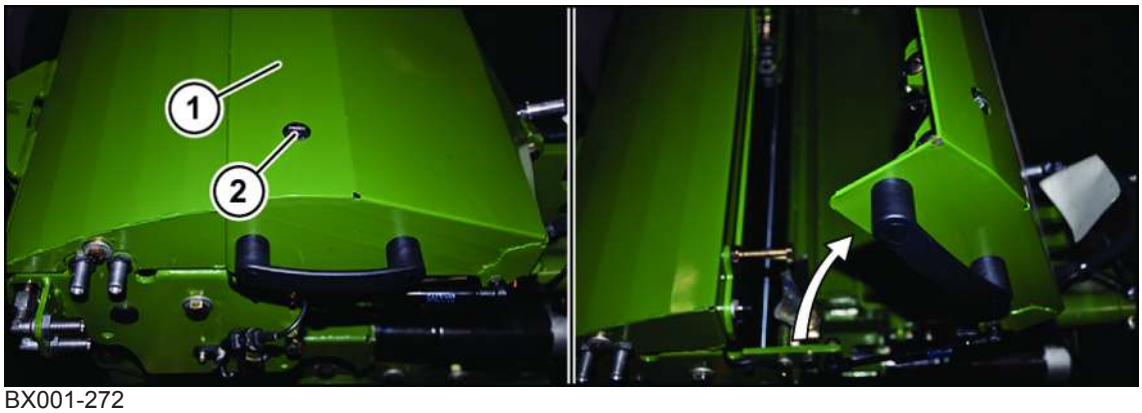

BX001-272

- Shut down and secure the machine, *refer to page 34*.

To open the grinding device flap:

WARNING! Risk of injury from exposed, rotating chopping drum. Do not open the flap on the grinding device until the chopping drum has come to a standstill.

- Unlock the lock (2) by turning it anti-clockwise using a flat head screwdriver and swivel up the flap (1).

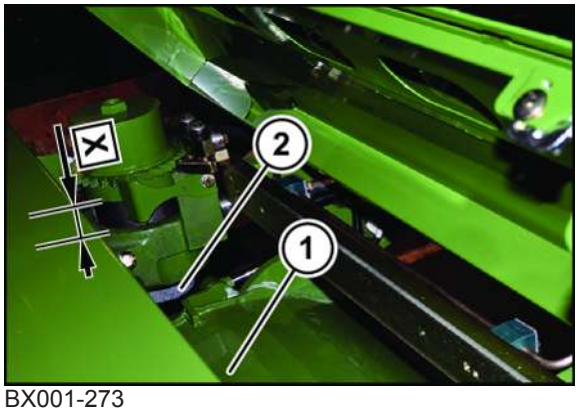

BX001-273

- Clean the grinding channel (1) (e.g. blow out with compressed air).
- Measure the visible thread length of the grinding device (dimension X).

If dimension X is ≥ 5 mm, the setting of the grinding stone (2) is correct and the grinding process can be started.

- Close the flap of the grinding device again.

If dimension X is < 5 mm, the grinding stone (2) must be re-adjusted or replaced, *refer to page 488*.

27.5.3 Performing grinding process

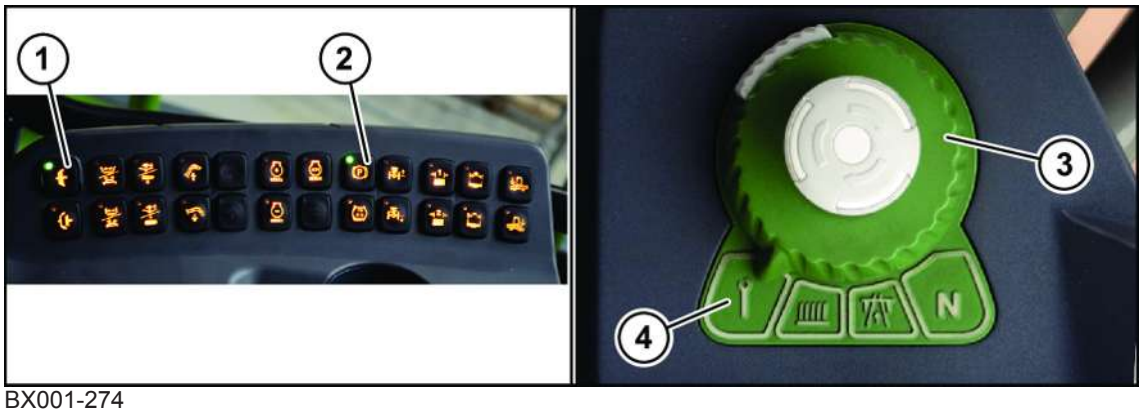

BX001-274

- ✓ The machine has been secured from rolling away with wheel chocks.
- ✓ The engine has been started and is idling.
- ✓ The parking brake (2) has been applied.
- ✓ The main coupling (1) has been switched on.
- ✓ The main mode switch (3) is in the "Maintenance" position (4).

BX001-275

The header must be on the ground for the grinding process:

- ▶ Press the "Manually lower lifting unit" key (8a) on the control lever until the header is on the ground.

EQG003-091

To change the setting of the grinding device:

- ▶ On the terminal open the Crop flow main menu -> Grinding device and counterblade menu "Settings", *refer to page 185*.
- ▶ Change the setting if required.

To run a grinding process from the driver's seat

EQG003-092

- ▶ On the terminal open the Crop flow main menu -> Grinding device and counterblade menu "Maintenance", *refer to page 185*.
- ▶ Press the "Start grinding" key.

To run a grinding process from the grinding control unit.

BX001-278

- ▶ Press the "Automatic grinding operation" key (7).
- ▶ During the grinding process wear hearing protection.

The set number of grinding cycles is run. At the end of the grinding process the grinding stone moves to the parking position on the right side of the grinding device.

27.5.4 Readjusting the counterblade

When the grinding process is complete, the counterblade must be readjusted or adjusted while the chopping drum is running.

Prerequisite with mounted header:

- ✓ The lifting unit is lowered until the header rests on the ground.

Readjusting or adjusting the counterblade from the driver's seat (for "Automatic counterblade adjustment" version):

The counterblade can be readjusted or adjusted from the driver's seat in two different ways:

- With "Readjust counterblade" the counterblade is moved up to the chopping drum (duration approx. 30 s).
- With "Adjust counterblade" the counterblade is moved up to the chopping drum and aligned with the chopping blades (duration approx. 2 min).

To readjust the counterblade from the driver's seat:

EQG003-097

- On the terminal open the Crop flow main menu -> Grinding device and counterblade menu "Maintenance", *refer to page 185*.
- Press the "Start readjusting counterblade" key.
- Wait until an information message appears which shows that the readjusting process has successfully concluded or that the process was terminated.

Alternatively:

To adjust the counterblade from the driver's seat:

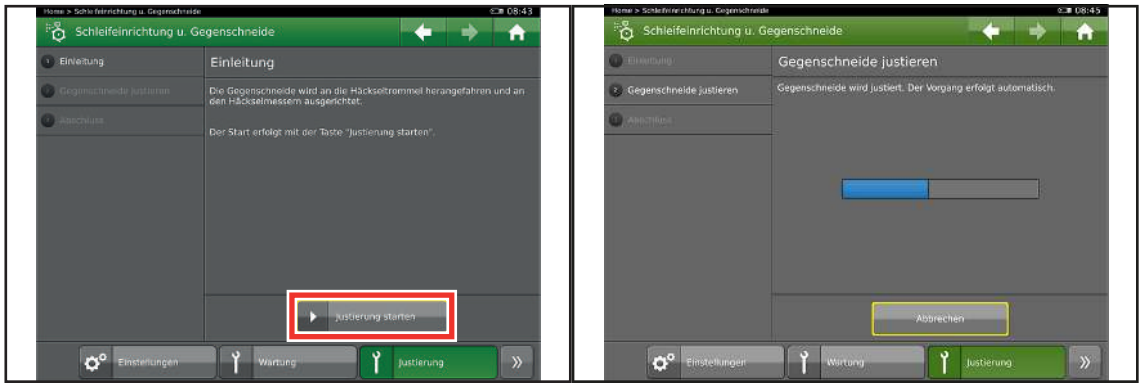

EQG003-098

- On the terminal open the Crop flow main menu -> Grinding device and counterblade menu "Adjustment", *refer to page 185*.
- Press the "Start adjustment" key.
- ➡ A progress bar shows how far the adjustment of the counterblade has progressed. At the end of the process the display shows whether the adjustment has successfully concluded or whether the process was terminated.

If the header was replaced, check the counterblade after the first readjustment or adjustment to determine whether the chopping blades are in contact with the counterblade:

- ▶ Leave the cabin and go to the grinding control unit.
- ▶ Lift the header using the grinding control unit.
- ▶ Check whether noise is generated which indicates that the chopping blades have come into contact with the counterblade.
- ➡ If no noise is generated, the counterblade has been correctly readjusted or adjusted.
- ➡ If noise is generated, the value must be reduced in the "Sensitivity of the automatic counterblade adjustment" parameter.
  - ▶ Set down the header on the ground using the grinding control unit.

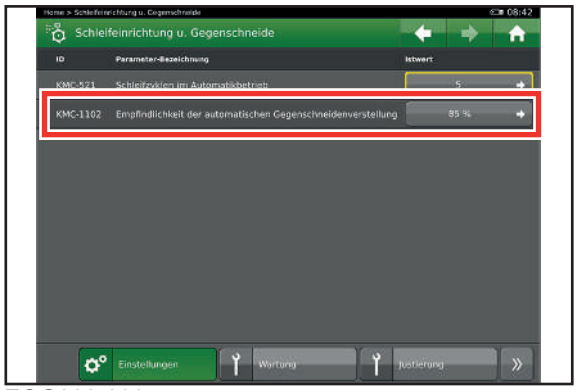

EQG003-099

- ▶ Reduce the value of the "Sensitivity of the automatic counterblade adjustment" parameter in one small step.
- ▶ Readjust or adjust the counterblade again.

When the counterblade has been readjusted or adjusted:

- ▶ Leave the cabin and go to the grinding control unit.
- ▶ Lift the header using the grinding control unit.
- ▶ Check whether noise is generated which indicates that the chopping blades have come into contact with the counterblade.
- ➡ If no noise is generated, the counterblade has been correctly readjusted or adjusted.
- ➡ If noise is generated, the value must be reduced in the "Sensitivity of the automatic counterblade adjustment" parameter until noise is no longer generated after readjusting or adjusting the counterblade.

To readjust the counterblade from the Grinding Control Unit:

BX001-279

- Alternatively tap the "Move right counterblade up to chopping drum" key (3) and the "Move left counterblade up to chopping drum" key (5) on the grinding control unit.

As soon as noise is generated when readjusting the counterblade on one side (the blades have then come into contact with the counterblade):

- Immediately release the key and tap the corresponding "Move counterblade away from the chopping drum" key (4 or 6).
- Readjust the counterblade on the opposite side using the same procedure.

When the counterblade has been readjusted, the chopping drum must run without making any noise.

If there is no noise while the counterblade is being re-adjusted, the blades must be re-adjusted or worn blades and blades which can no longer be re-adjusted must be replaced, *refer to page 493*.

27.5.5 Grinding and readjusting counterblade (for the version with "automatisch counterblade adjustment")

To start a grinding process with subsequent readjustment of the counterblade:

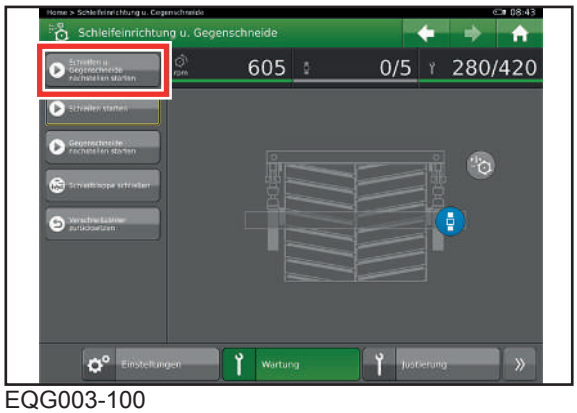

EQG003-100

- On the terminal open the Crop flow main menu -> Grinding device and counterblade menu "Maintenance", *refer to page 185*.
- Press the "Start grinding and readjusting counterblade" key.
- Wait until an information message appears which shows that the readjusting process has successfully concluded or that the process was terminated.

27.6 Readjusting or replacing grinding stone

⚠ WARNING

Risk of injury due to rotating chopping drum

Sharp and rotating chopping blades represent a danger of injury when the grinding device flap is opened while the chopping drum rotates.

- Do not open the flap of grinding device until the chopping drum has come to a complete stop.

⚠ WARNING

Risk of fire due to deposits in the grinding channel

A mixture of dust, grass and chaff in the grinding channel is a source of fire and means an increased fire risk during the grinding process.

- Before grinding the chopping blades, check the automatic readjustment of the grinding stone and clean the grinding channel.

INFORMATION

Check the grinding stone for damage and wear and replace if required. These may cause the grinding stone to run noisily, resulting in an uneven grinding pattern.

The grinding stone of the grinding device is automatically re-adjusted during the grinding process.

If automatic re-adjustment no longer occurs, the grinding stone must be re-adjusted.

The grinding stone can be re-adjusted 3–4 times, then the grinding stone must be replaced.

27.6.1 Checking grinding stone

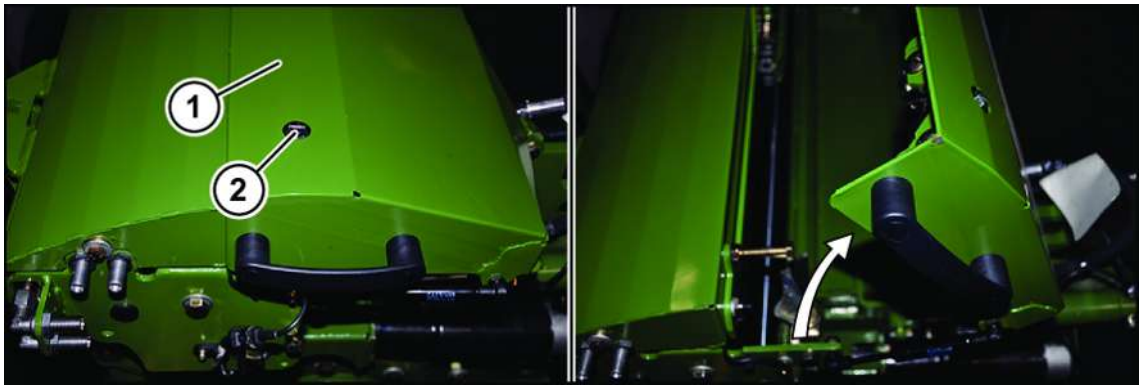

BX001-272

- Shut down and secure the machine, *refer to page 34*.

To open the flap of the grinding device:

WARNING! Risk of injury from exposed, rotating cutter drum. Do not open the flap on the grinding device until the cutter drum has come to a standstill!

- Unlock the lock (2) by turning it anti-clockwise using a flat head screwdriver and swivel up the flap (1).

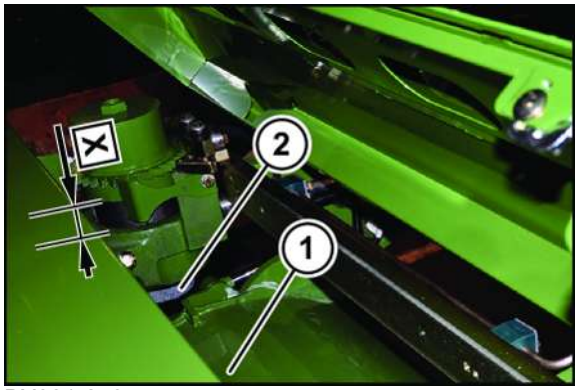

BX001-273

- Clean the grinding channel (1) (e.g. blow out with compressed air).
- Measure the visible thread length of the grinding device (dimension X).

If dimension X is ≥ 5 mm, the grinding stone setting is correct and the grinding process can be started.

- Close the flap of the grinding device again.

If dimension X is < 5 mm, the grinding stone must be re-adjusted or replaced.

27.6.2 Readjusting grinding stone

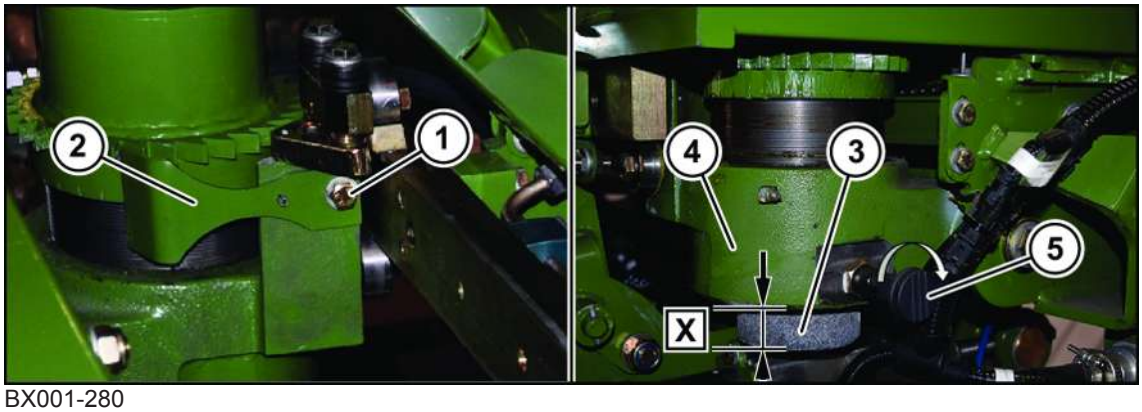

BX001-280

To prepare the grinding device for re-adjustment:

- Remove the screw (1).
- Remove the pawl (2).
- Measure and note down dimension X from the lower edge of the grinding stone (3) to the lower edge of the grinding slide (4).
- Rotate the detent pin (5) by 90° until it engages in the first notch.

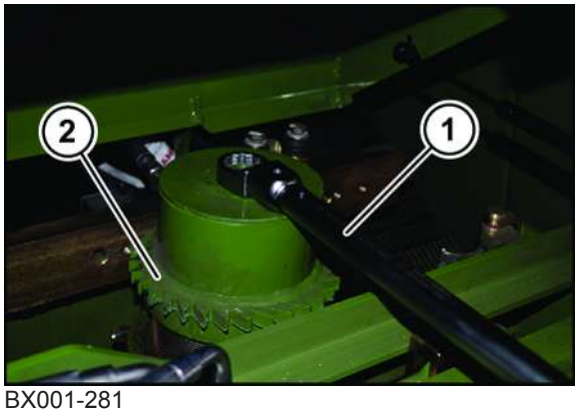

BX001-281

- Loosen the ratchet wheel (2) using a spanner WAF 30 (1) until the detent pin engages.
- Continue loosening the ratchet wheel (2) until the detent pin fully engages and locks the grinding stone adjustment.

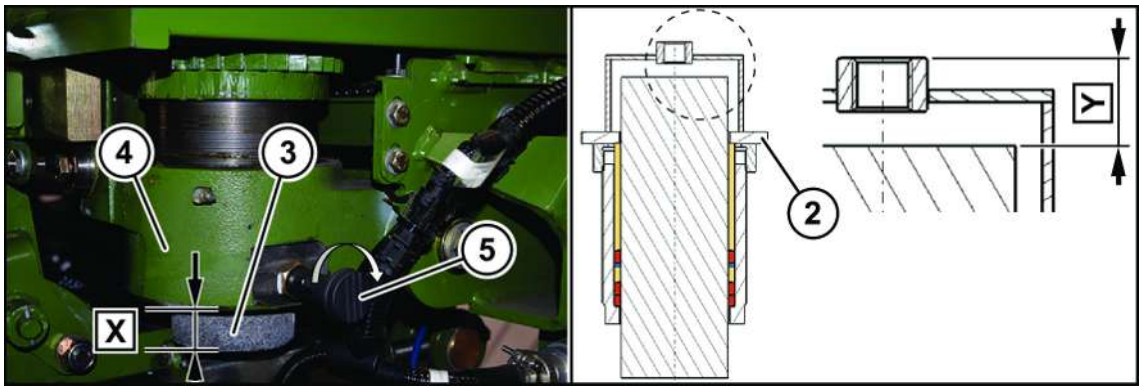

BX001-282

- To loosen the clamp of the grinding stone, continue loosening the ratchet wheel (2).
- Press down the grinding stone (3) from above until dimension X-2 mm has been reached from the lower edge of the grinding stone to the lower edge of the grinding slide.
- To reclamp the grinding stone, tighten the ratchet wheel to a torque of 180 Nm.
- To ensure that the grinding stone does not touch the chopping blades, check the dimension X-2 mm.

NOTICE

Damage to chopping drum and grinding device due to incorrect operation

If there is no free travel to the chopping drum when the grinding stone has been readjusted, there is a risk of collision between the grinding stone and the chopping blade.

- After readjusting the grinding stone, check and observe dimension X – 2 from the lower edge of the grinding stone to the lower edge of the grinding slide.

NOTICE

Damage to the chopping drum due to the grinding stone falling out of the grinding device

If the grinding stone is too short due to wear, it is no longer adequately clamped and may fall onto the rotating chopping drum.

- If dimension Y (distance from the upper edge of the grinding stone to the upper edge of the hexagon nut) is greater than 160 mm, replace the grinding stone.

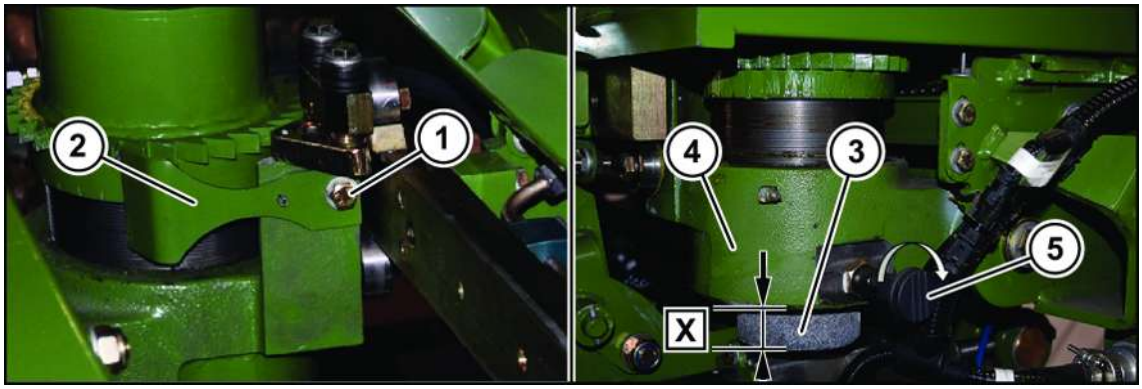

BX001-280

- Measure dimension Y (distance from the upper edge of the grinding stone to the upper edge of the hexagon nut) through the nut.

If dimension Y is < 160 mm, the clamping length is adequate to securely clamp the grinding stone.

NOTICE
Damage to the grinding device due to incorrect operation If the detent pin is not removed again when the grinding stone has been readjusted, it will be damaged during the next automatic grinding process. ▶ After readjusting the grinding stone, always lift the detent pin and rotate it by 90°.

- Pull the detent pin (5) out of the notch and rotate by 90°.
- Re-attach the pawl (2).
- Close the flap of the grinding device again.
- Reset the wear counter on the operating terminal, *refer to page 185*.
- After the first grinding process, retighten the ratchet wheel, tightening torque = 180 Nm.

If dimension Y is ≥ 160 mm, the grinding stone must be replaced, *refer to page 491*

27.6.3 Replacing grinding stone

If the grinding stone (1) is worn to such an extent that it can no longer be readjusted, the grinding stone must be replaced.

If the grinding stone (1) is replaced, the clamping rings (3) must also be replaced.

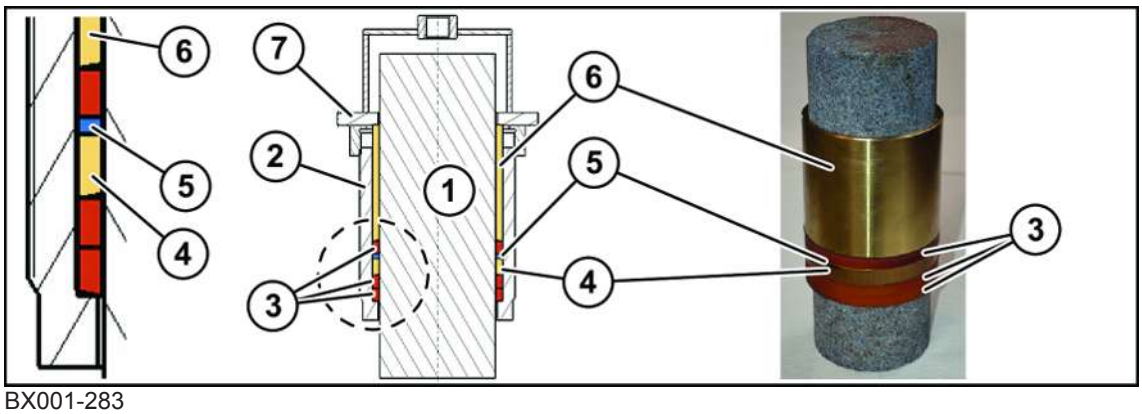

BX001-283

1	Grinding stone	5	Support disc
2	Threaded sleeve	6	Sleeve
3	Clamping ring	7	Gearwheel
4	Intermediate ring		

When installing the new grinding stone, ensure that the parts are correctly arranged:

- The clamping rings (3), the intermediate ring (4), the support disc (5) and the sleeve (6) must be mounted as shown in the figure.
- The bevelled edges of the intermediate ring (4) and the sleeve (6) must show downwards.

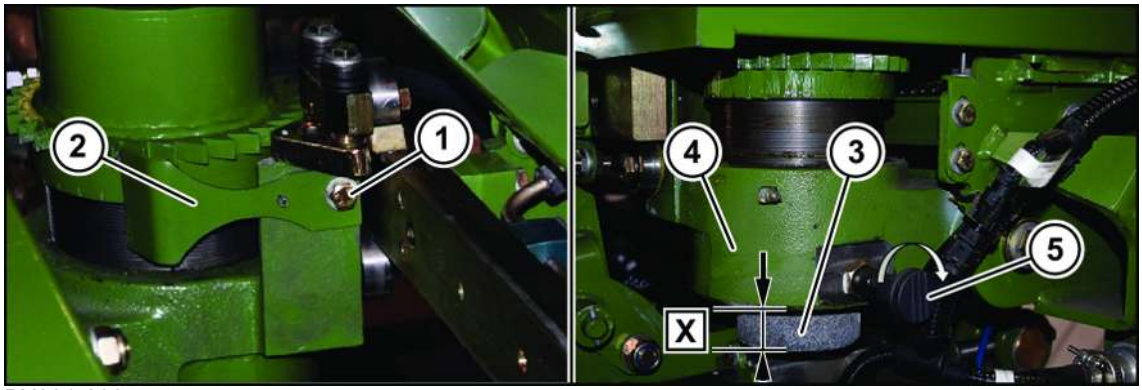

BX001-280

To prepare the grinding device for replacement of the grinding stone:

- ▶ Remove the screw (1).
- ▶ Remove the pawl (2).
- ▶ Measure and note down dimension X from the lower edge of the grinding stone (3) to the lower edge of the grinding slide (4).
- ▶ Rotate the detent pin (5) by 90° until it engages in the first notch.

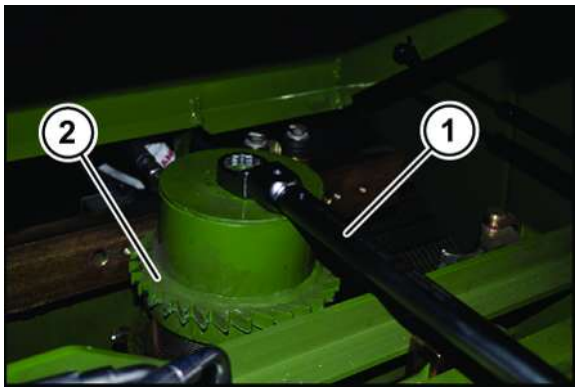

BX001-281

- ▶ Loosen the ratchet wheel (2) using a spanner W/F 30 (1) until the detent pin engages.
- ▶ Continue loosening the ratchet wheel (2) until the detent pin fully engages and locks the grinding stone adjustment.
- ▶ Continue loosening the ratchet wheel (2) and remove.
- ▶ Press out and remove the grinding stone.
- ▶ Remove the clamping rings.
- ▶ Insert a new grinding stone from above.

- Press down the grinding stone from above until dimension X-2 mm has been reached from the lower edge of the grinding stone to the lower edge of the grinding slide.
- Re-attach the ratchet wheel and tighten to a torque of 180 Nm.
- To ensure that the grinding stone does not touch the chopping blades, check the dimension X-2 mm.

NOTICE

Damage to chopping drum and grinding device due to incorrect operation

If there is no free travel to the chopping drum when the grinding stone has been readjusted, there is a risk of collision between the grinding stone and the chopping blade.

- After readjusting the grinding stone, check and observe dimension X – 2 from the lower edge of the grinding stone to the lower edge of the grinding slide.

NOTICE

Damage to the grinding device due to incorrect operation

If the detent pin is not removed again when the grinding stone has been readjusted, it will be damaged during the next automatic grinding process.

- After readjusting the grinding stone, always lift the detent pin and rotate it by 90°.

- Pull the detent pin out of the notch and rotate by 90°.
- Re-attach the pawl.
- Close the flap of the grinding device again.
- Reset the grinding cycle counter on the terminal, *refer to page 185*.
- After the first grinding process, retighten the ratchet wheel, tightening torque = 180 Nm.

➡ The process "Replace grinding stone" is complete.

27.7 Readjusting or changing chopping blades

WARNING

Risk of injury from sharp chopping blades and sharp screw bars (for version with MaxFlow chopping drum)

When performing maintenance work on the chopping drum, there is a risk of the operators being injured by the sharp chopping blades or the sharp screw bars.

- When working on the chopping drum, work particularly carefully and prudently.
- Wear protective gloves when working on the chopping drum.
- Turn the chopping drum clockwise using the chopping drum turning lever only *refer to page 495* and, when the required position has been reached, lock with the locking bolt, *refer to page 495*.

INFORMATION

To avoid imbalances in the chopping drum:

- ▶ the chopping blades and the screw bars must always be replaced in pairs.
  Replace both blades and both screw bars each with are located on the chopping drum offset by 180°
  (e.g. blade 1 and blade 6 in case of a chopping drum with 20 blades,
  blade 1 and blade 8 in case of a chopping drum with 28 blades,
  blade 1 and blade 10 in case of a chopping drum with 36 blades).
  The blades and screw-on strips which form a pair depend on the total number of blades.
- ▶ Mount a set of dismounted screw-on strips in the same order as before disassembly on the chopping drum again.

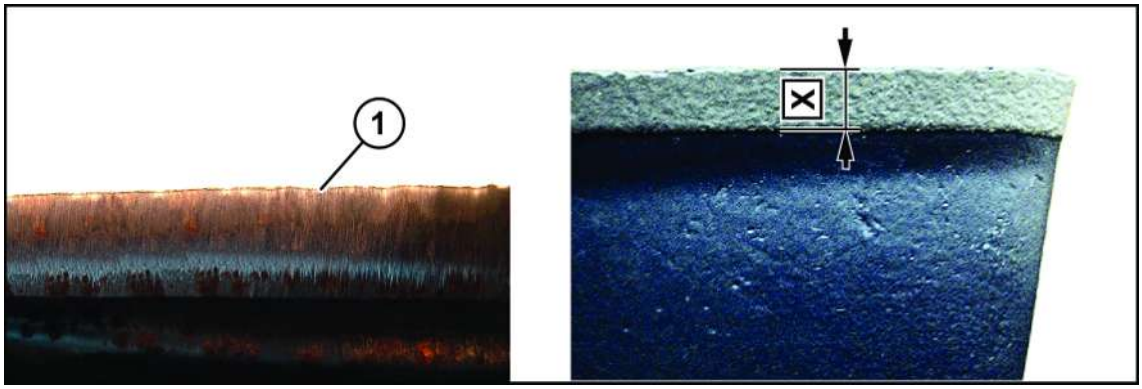

BX001-284

Worn chopping blades may result in an unsatisfactory chop quality. To keep wear as low as possible, the chopping blades must be ground correctly and regularly and the distance between the counterblade and the chopping blades (cutting gap) must be adjusted correctly and regularly, *refer to page 480*.

The chopping blades must be replaced if they can no longer be readjusted and the coating (a) under the chopping blade is worn. In the original state the coating “X” is 19 mm.

The chopping drum operates particularly efficiently if the maximum cutting radius and conveying space can be used. Therefore the chopping blades should be readjusted if the dimension “X” is less than 10-12 mm.

Preparatory activities:

- Remove the intake unit, *refer to page 468*.
- Shut down and secure the machine, *refer to page 34*.

Slackening the belt drive for intermediate gearbox chopping drum

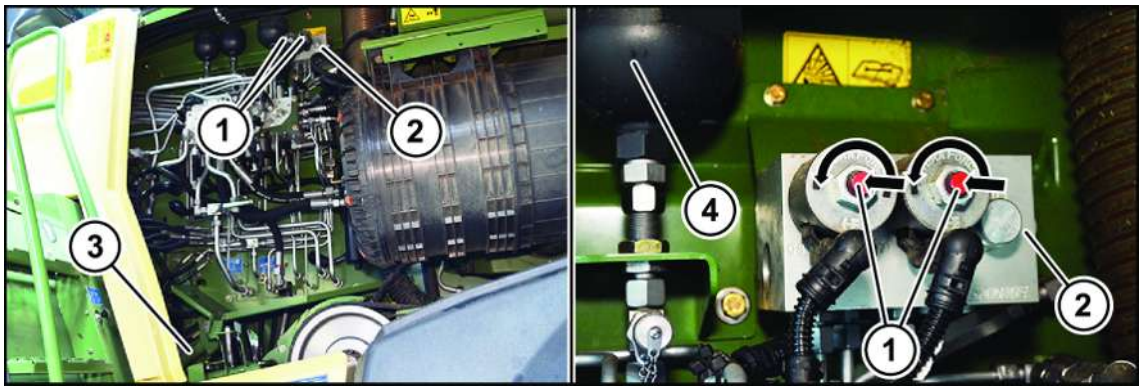

BX001-610

To be able to rotate the chopping drum using the turning lever, the belt drive for the "intermediate gearbox chopping drum" must be slackened.

- Open the left side hood.
- Press the valves (1) into the control block (2) and turn to the left until the valve heads automatically jump out.
- Check whether the belt tensioner (3) of the belt drive for the "intermediate gearbox chopping drum" has been run in and the belt drive has become slack.

If not:

- Start the engine and run at idling speed for several seconds.

The pressure tank (4) is filled, the belt tensioner (3) is relieved and the belt drive for the "intermediate gearbox chopping drum" has become slack.

Rotating chopping drum

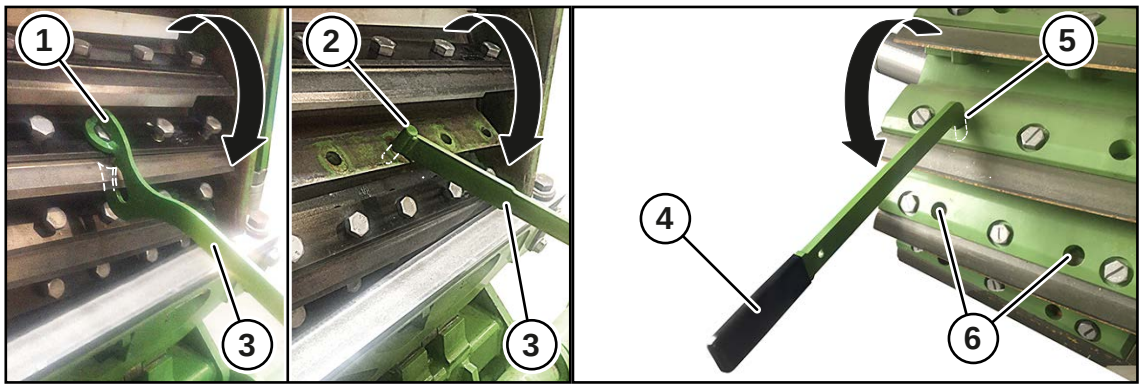

BX002-379 / BX002-380

The turning lever (3) for the biogas chopping drum has a holding fixture (1) at one for the hexagon head screws which are used to attach the chopping blades. At the opposite end the turning lever (3) for the biogas chopping drum has a holding fixture (2) which fits into the boreholes of the blade carriers.

The turning lever (4) for the MaxFlow chopping drum has a holding fixture (5) at the end for the boreholes of the blade carriers (6).

- Turn the chopping drum clockwise using the turning levers (3, 4) only.

After the maintenance work:

- Press the valve heads into the control block and turn clockwise.
- Close the left side hoods.

The belt tensioner of the belt drive for the "intermediate gearbox cutter drum" is tensioned again as soon as the engine is started.

Locking chopping drum

The locking device is on the right-hand side of the chopping drum

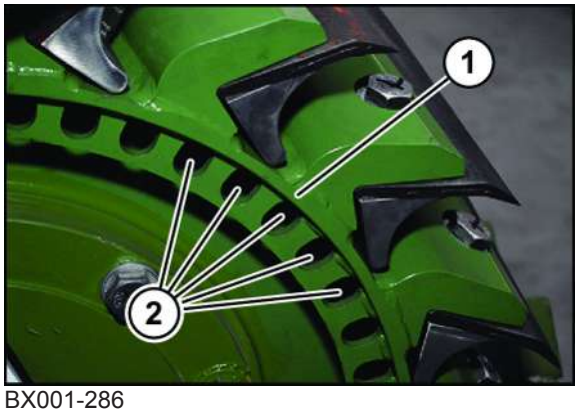

BX001-286

The chopping drum (1) has a locking hole (2) for each working position.

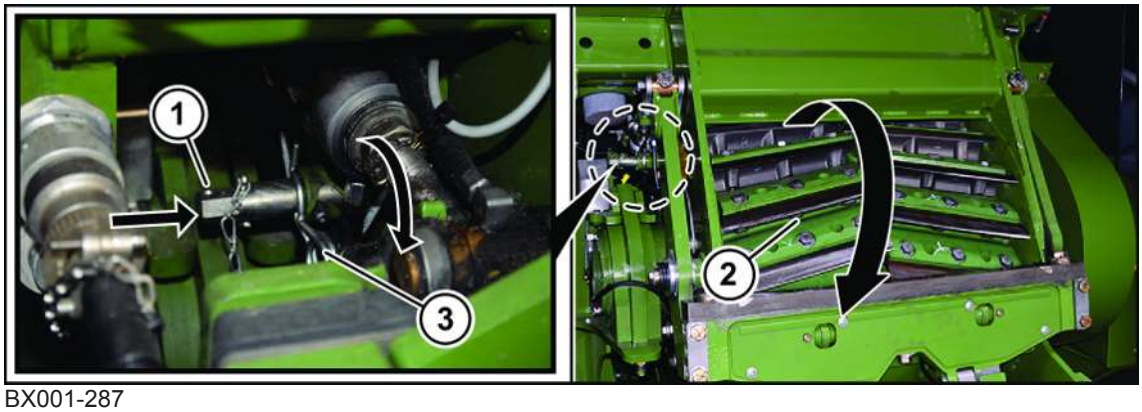

BX001-287

- Slide a spanner (width across flats 17) on the locking bolt (1).
- Pull out the spring cotter pin (3).
- Turn the chopping drum (2) into the desired working position.
- Use the spanner to push the locking bolt (2) towards the chopping drum up to the stop and to rotate it one quarter turn clockwise.

Setting the chopping blades (for version with MaxFlow chopping drum)

NOTICE

Damage to the machine caused by installation of defective screws

If the old screws are screwed in after changing the chopping blades, there is a risk that these screws may be damaged and fail during operation, possibly damaging the machine.

- When changing the blades, use new screws to fasten the chopping blades.

To sharpen the chopping blades with as few grinding cycles as possible, the chopping blades must be adjusted to the grinding device.

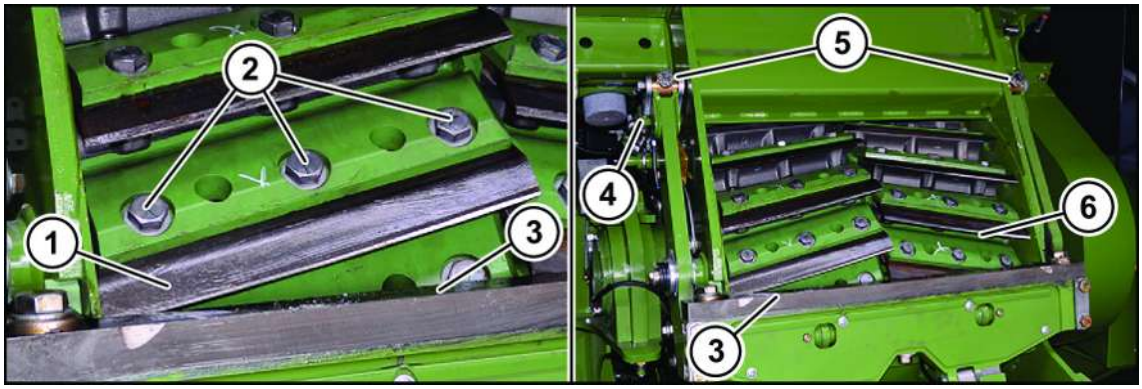

BX001-288

- Grind the chopping blades (1) by using the grinding device,*refer to page 480*.

> ***INFORMATION***
>
> If it is necessary to replace the counterblade, replace it before carrying out the following settings.

- Adjust the counterblade (3) with the spindle motors (4) via the grinding control unit in parallel with the ground area of the blades, *refer to page 484*

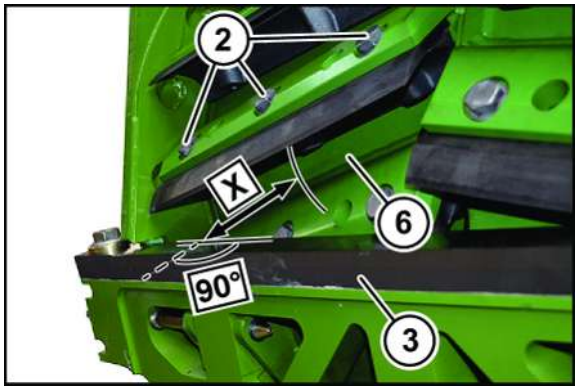

BX001-289

- Measure the distance “X” of counterblade (parallel to the upper edge of counterblade) to the drum casing left and right.
- Determine the difference between the both values.
- Adjust the distance from counterblade (3) to drum casing (6) (measured in parallel with upper edge of counterblades) via the grinding control unit to the dimension X = 87 – 89 mm. In doing so, consider the difference previously determined. This ensures that the counterblade is aligned in parallel to the blades.
- Loosen the centre screw (2) of the blade.

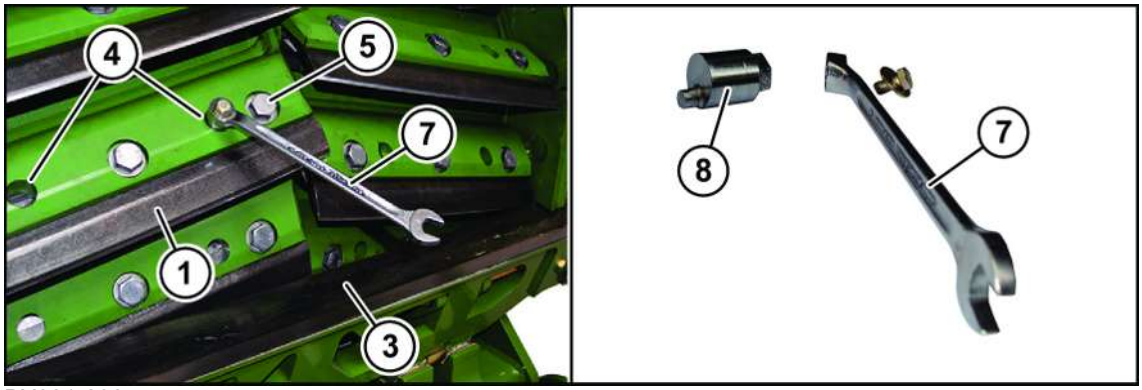

BX001-290

- Screw a ring spanner W/F17 (7) with screw and disc on the eccentric (8) included with delivery. The eccentric is located in direction of travel left on the chopping drum housing.
- Insert the eccentric into the borehole (4).
- Loosen the outer screws (5) just enough so that the blade (1) can be brought into position free of play by turning the eccentric.
- Adjust the blade (1) by moving the ring spanner (7). Set the distance from blade (1) to counterblade (3) to a dimension of 0.1 mm.
- Tighten all hexagon head screws of the blade using a spanner (torque 280 Nm).
- Loosen the locking of the chopping drum, turn the chopping drum by one row of blades and lock it again.
- Readjust the blades of the next row of blades.
- Continue in this manner until all rows of blades of the chopping drum are readjusted equally.
- Loosen the locking of the chopping drum.
- Set the grinding stone so that the distance between blade back and grinding stone is 0.5 mm, *refer to page 488*.
- Equally move away the counterblade a little on both sides.
- Mount intake unit, *refer to page 471*.
- Grind the chopping blades, *refer to page 480*.
- Readjust the counterblade, *refer to page 484*.

Adjusting the chopping blades (for version with 40 biogas chopping drum)

NOTICE

Damage to the machine caused by installation of defective screws

If the old screws are screwed in after changing the chopping blades, there is a risk that these screws may be damaged and fail during operation, possibly damaging the machine.

- When changing the blades, use new screws to fasten the chopping blades.

To sharpen the chopping blades with as few grinding cycles as possible, the chopping blades must be adjusted to the grinding device.

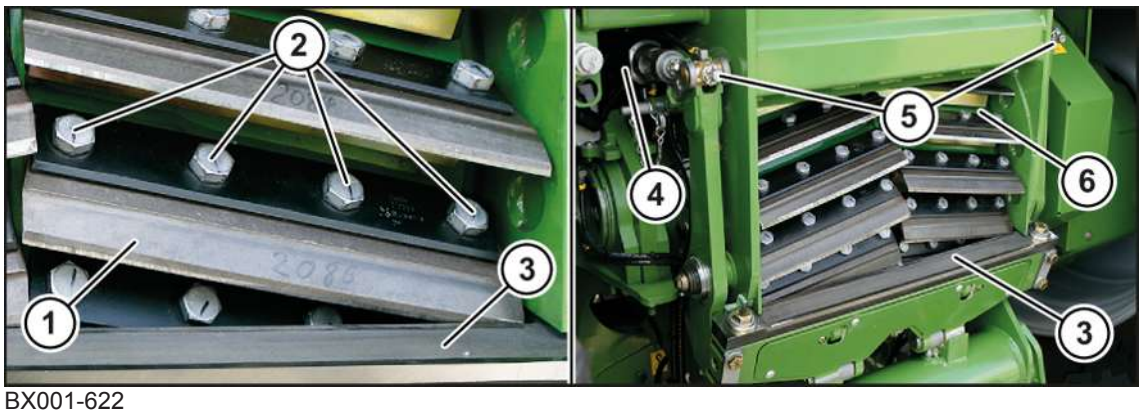

BX001-622

- Grind the chopping blades (1) using the grinding device, *refer to page 480*.

INFORMATION

If the counterblade has to be replaced, do this before making the following settings.

- Using the grinding control unit, set the counterblade (3) with the spindle motors (4) parallel to the ground surface of the blades, *refer to page 484*.

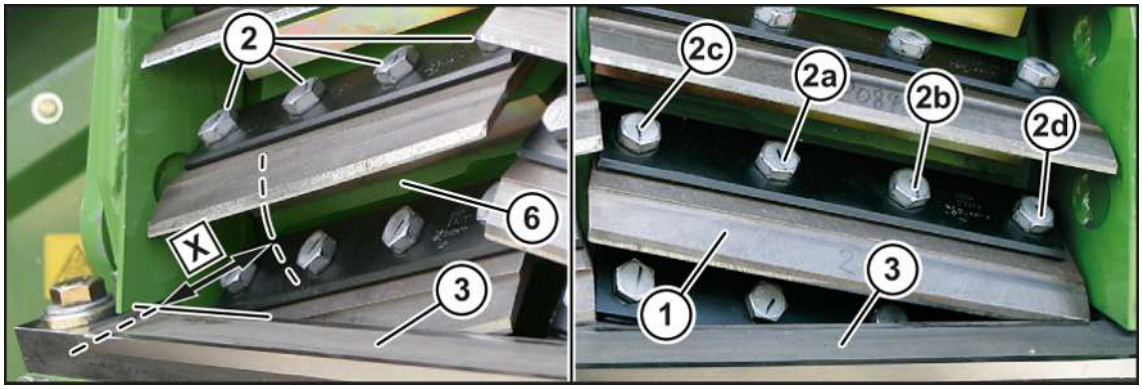

BX001-623

- Measure the distance "X" between the counterblade (parallel to the upper edge of the counterblade) and the drum casing on the left and right.
- Determine the difference between the two values.
- Using the grinding control unit, set the distance between the counterblade (3) and the drum casing (6) (measured parallel to the upper edge of the counterblades) to the dimension X=87–89 mm. In doing so, consider the difference determined beforehand. This ensures that the counterblade has been aligned parallel to the blades.
- Loosen all hexagon head screws (2) of a blade.
- Set the distance between the blade (1) and the counterblade (3) to 0.1 mm.
- Tighten the chopping blade (1) in the sequence 2a, 2b, 2c, 2d using a spanner (torque 280 Nm).
- Loosen the locking device on the chopping drum, rotate the chopping drum by one row of blades and lock again.
- Readjust the blades on the next row of blades.
- Continue in this manner until all rows of blades on the chopping drum have been readjusted equally.
- Unlock the chopping drum.
- Set the grinding stone until there is a gap of 0.5 mm between the blade back and the grinding stone, *refer to page 488*.
- Move the counterblade back a little, equally on both sides.
- Mount the intake unit, *refer to page 471*.
- Grind the chopping blades, *refer to page 480*.
- Re-adjust the counterblade, *refer to page 484*.

Replacing chopping blades (for version with MaxFlow chopping drum)

Worn and damaged chopping blades must be replaced.

⚠ WARNING

Risk of injury from sharp chopping blades and sharp screw bars (for version with MaxFlow chopping drum)

When performing maintenance work on the chopping drum, there is a risk of the operators being injured by the sharp chopping blades or the sharp screw bars.

- When working on the chopping drum, work particularly carefully and prudently.
- Wear protective gloves when working on the chopping drum.
- Turn the chopping drum clockwise using the chopping drum turning lever only *refer to page 495* and, when the required position has been reached, lock with the locking bolt, *refer to page 495*.

NOTICE

Damage to the machine caused by installation of dirty parts

If dirty chopping blades and screw bars are installed, there is a risk of the chopping blades becoming detached from the chopping drum and damaging components of the machine.

- Clean all parts before installing them.

NOTICE

Damage to the machine caused by installation of defective screws

If the old screws are screwed in after changing the chopping blades, there is a risk that these screws may be damaged and fail during operation, possibly damaging the machine.

- When changing the blades, use new screws to fasten the chopping blades.

INFORMATION

To avoid imbalances in the chopping drum:

- the chopping blades and the screw bars must always be replaced in pairs.
  Replace both blades and both screw bars each with are located on the chopping drum offset by 180°
  (e.g. blade 1 and blade 6 in case of a chopping drum with 20 blades,
  blade 1 and blade 8 in case of a chopping drum with 28 blades,
  blade 1 and blade 10 in case of a chopping drum with 36 blades).
  The blades and screw-on strips which form a pair depend on the total number of blades.
- Mount a set of dismounted screw-on strips in the same order as before disassembly on the chopping drum again.

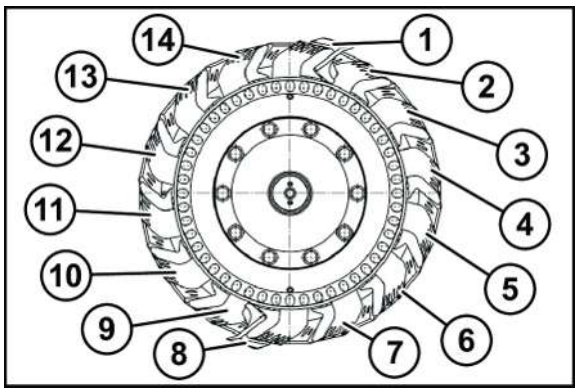

BX001-291

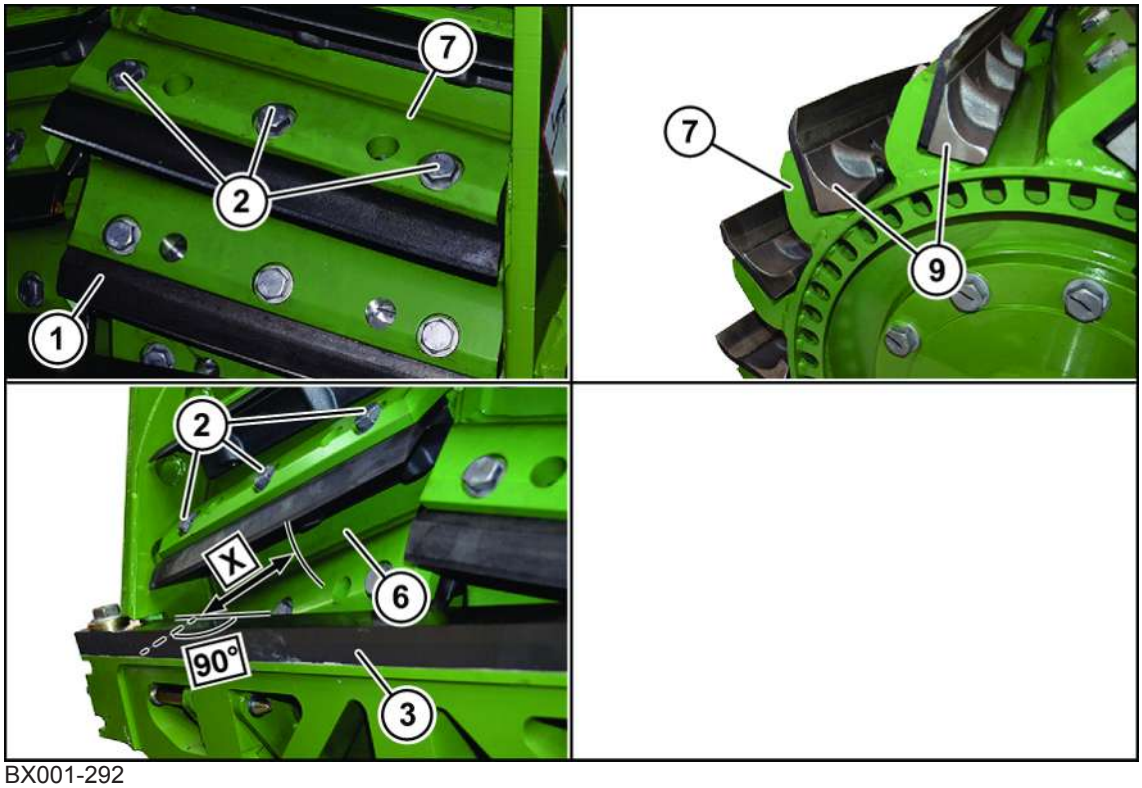

BX001-292

To replace the chopping blade:

- Grind the chopping blades (1) using the grinding device, *refer to page 480*.

> ***INFORMATION***
>
> If the counterblade has to be replaced, do this before making the following settings.

- Using the grinding control unit, set the counterblade (3) parallel to the ground surface of the blades, *refer to page 484*.
- Measure the distance "X" between the counterblade (parallel to the upper edge of the counterblade) and the drum casing on the left and right.
- Determine the difference between the two values.
- Using the grinding control unit, set the distance between the counterblade (3) and the drum casing (6) (measured parallel to the upper edge of the counterblades) to the dimension X=87 – 89 mm. In doing so, consider the difference determined beforehand. This ensures that the counterblade has been aligned parallel to the blades.
- Unscrew the hexagon head screws (2).
- Pull out the chopping blade forwards.
- Clean the blade carrier (7) and the screw bar (9).
- Check the screw bar.
- Replace damaged or heavily worn screw bar.

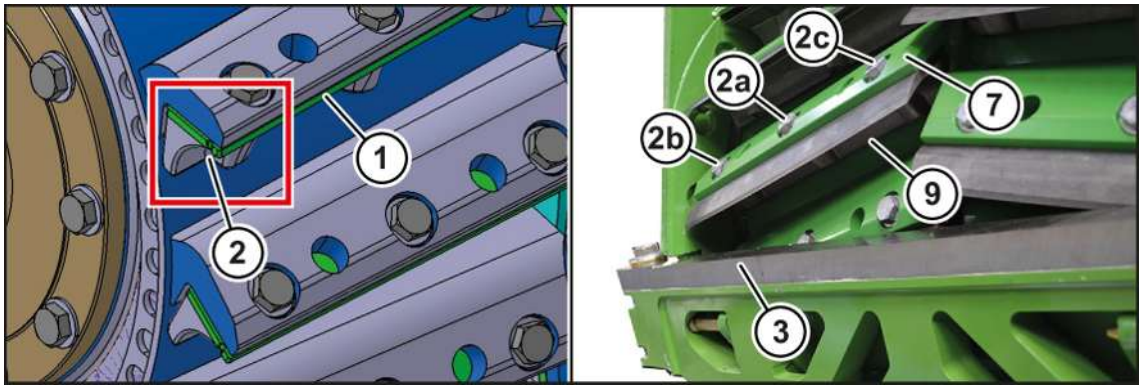

BX001-293

- When inserting dummy blades (1), pay attention to the installation position; the notch (2) must be outside and at the front, as seen in the direction of travel. The other attachment is, as described below, identical to the installation of the chopping blades.
- Insert a new chopping blade using new screws (2).
- Leave the middle screw (2a) loose.
- Screw a ring spanner (W/F 17) with a screw and disc on the supplied eccentric. The eccentric is located in direction of travel left on the chopping drum housing, *refer to page 496*.
- Insert the eccentric into the borehole of the blade carrier (7).
- Tighten the outer screws (2b, 2c) until the blade can be positioned backlash-free by turning the eccentric.
- Adjust the blade by moving the ring spanner. Set the gap between the blade and counterblade (3) to a dimension of 0.1 mm.
- Tighten the screws in the sequence 2a, 2b, 2c (from the inside to the outside) to a torque of 280 Nm.
- Loosen the locking device on the chopping drum, rotate the chopping drum by one row of blades and lock again.
- Readjust the blades on the next row of blades.
- Continue in this manner until all rows of blades on the chopping drum have been readjusted equally.
- Unlock the chopping drum.
- Set the grinding stone until there is a gap of 0.5 mm between the blade back and the grinding stone, *refer to page 488*.
- Move the counterblade back a little, equally on both sides.
- Mount the intake unit, *refer to page 477*.
- Grind the chopping blades, *refer to page 480*.
- Re-adjust the counterblade, *refer to page 484*.

Replace the chopping blade (for version with 40x biogas chopping drum)

Worn and damaged cutting blades must be replaced.

⚠ WARNING

Risk of injury from sharp chopping blades

When performing maintenance work on the chopping drum, there is a risk of the operators being injured by the sharp chopping blades.

- When working on the chopping drum, work particularly carefully and prudently.
- Wear protective gloves when working on the chopping drum.
- Turn the chopping drum clockwise using the chopping drum turning levers only *refer to page 495* and, when the required position has been reached, lock with the locking bolt, *refer to page 495*.

NOTICE

Damage to the machine caused by installation of dirty parts

If dirty chopping blades and screw bars are installed, there is a risk of the chopping blades becoming detached from the chopping drum and damaging components of the machine.

- Clean all parts before installing them.

NOTICE

Damage to the machine caused by installation of defective screws

If the old screws are screwed in after changing the chopping blades, there is a risk that these screws may be damaged and fail during operation, possibly damaging the machine.

- When changing the blades, use new screws to fasten the chopping blades.

INFORMATION

To avoid imbalances in the chopping drum:

- the chopping blades and the screw bars must always be replaced in pairs.
  Replace both blades and both screw bars each with are located on the chopping drum offset by 180°
  (e.g. blade 1 and blade 11 in case of a chopping drum with 40 blades).
  The blades and screw-on strips which form a pair depend on the total number of blades.
- Mount a set of dismounted screw-on strips in the same order as before disassembly on the chopping drum again.

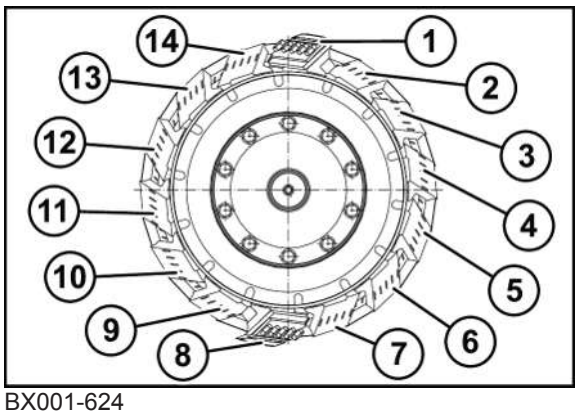

BX001-624

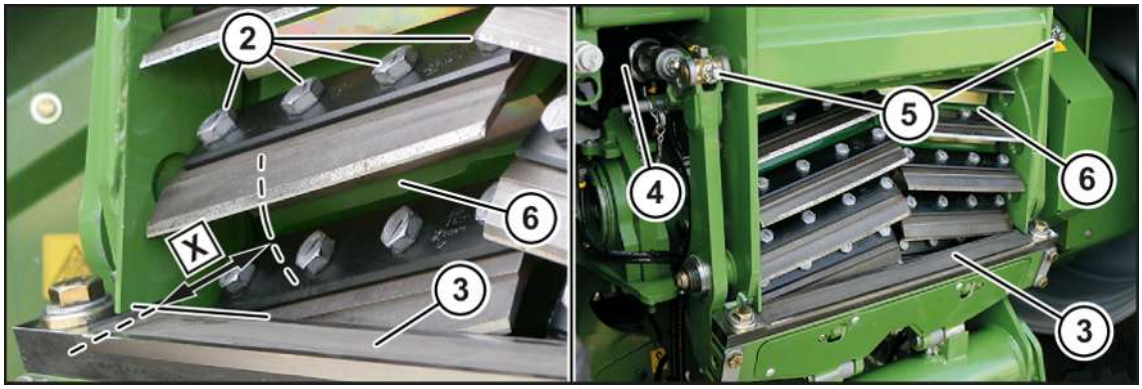

BX001-627

To replace the cutting blade:

- Grind the chopping blades with the grinding device, *refer to page 480*.

INFORMATION
If the counterblade has to be replaced, do this before making the following settings.

- Using the grinding control unit, adjust the counterblade (3) parallel to the ground surface of the blades, *refer to page 484*.
- Measure the distance "X" between the counterblade (parallel to the upper edge of the counterblade) and the drum casing (6) on the left and right.
- Determine the difference between the two values.
- Using the grinding control unit, set the distance between the counterblade (3) and the drum casing (6) (measured parallel to the upper edge of the counterblades) to the dimension X=87-89 mm. In doing so, consider the difference determined beforehand. This ensures that the counterblade has been aligned parallel to the blades.

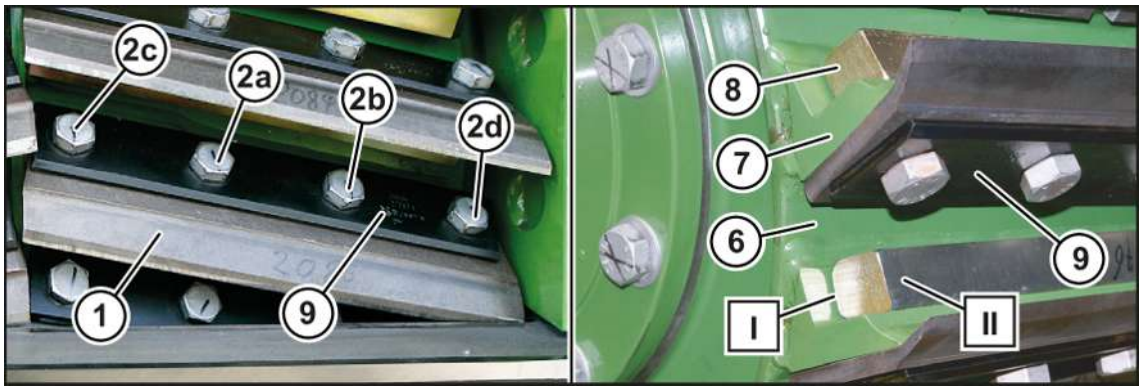

BX001-625

- Remove the hexagon head screws (2a, 2b, 2c, 2d).
- Pull out the chopping blade forward.
- Clean the blade carrier (7) and the pressure plates (9).
- Check the pressure plates (9).
- Replace pressure plates (9) if they are damaged or heavily worn.
- Insert the chopping blade (1) with new screws.

NOTICE
When installing the chopping blades (1), observe installation direction of the threaded bars (8). The area (I) with the rounded corners must be positioned on the chopping drum (6), the area (II) must be turned away from the chopping drum (6).

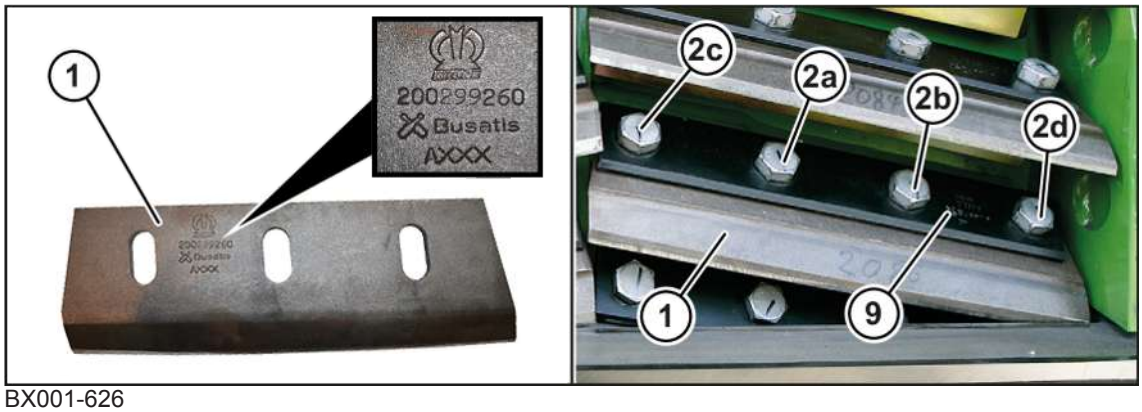

BX001-626

- Set the gap between the blade and the counterblade to 0.1 mm.
- Tighten the screws in the sequence 2a, 2b, 2c, 2d with a torque of 280 Nm.
- Loosen the locking device on the cutter drum, rotate the cutter drum by one row of knives and lock again.
- Replace the blades on the next row of knives.
- Continue in this manner until all rows of knives on the cutter drum have been replaced and readjusted equally.
- Unlock the chopping drum.
- Set the grinding stone until there is a gap of 0.5 mm between the blade back and the grinding stone, *refer to page 488*.
- Move the counterblade back a little, equally on both sides.
- Attach the intake unit, *refer to page 471*.
- Grind the chopping blade, *refer to page 480*.
- Readjust the counterblade, *refer to page 484*.

27.8 Working with half the number of chopping blades

The speed of the intake and the number of cutting blades determine the chop length.

EQG003-093

If the adjustable chop length range is inadequate and the chop length is still too short, the number of chopping blades can be reduced to half.

- Remove every second blade from both sides of the cutting drum.
- To guard the blade carriers, attach the supplied dummy blades (accessories), *refer to page 499*.
- Set the relevant number of blades on the terminal, *refer to page 182*.

27.9 Turning or replacing counterblade

⚠ WARNING

Risk of injury from sharp chopping blades and sharp screw bars (for version with MaxFlow chopping drum)

When performing maintenance work on the chopping drum, there is a risk of the operators being injured by the sharp chopping blades or the sharp screw bars.

- When working on the chopping drum, work particularly carefully and prudently.
- Wear protective gloves when working on the chopping drum.
- Turn the chopping drum clockwise using the chopping drum turning lever only *refer to page 495* and, when the required position has been reached, lock with the locking bolt, *refer to page 495*.

NOTICE

Damage to the machine by foreign bodies which get into the crop flow

If the counterblade or the counterblade support is not flat, the components could be damaged, small parts could get into the crop flow and damage components.

- Ensure that the counterblade and the counterblade support are clean and flat. If necessary, clean or replace the components that are not alright.

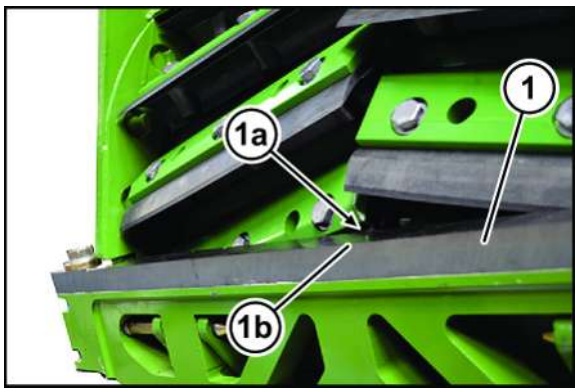

BX001-295

Both sides of the counterblade (1) can be used. If one or both sides (1a, 1b) of the counterblade are worn, the counterblade must be turned or replaced. If the forage harvester is operated with a worn counterblade, this will result in increased diesel consumption, unsatisfactory cutting quality and in a reduction in the downtime of the chopping blade. To essentially keep wear as low as possible, the gap between the counterblade and the chopping blades (cutting gap) must be adjusted correctly, *refer to page 480*.

Furthermore, the cutting blades must be correctly ground, *refer to page 493*.

Preparatory activities:

- Remove the intake unit, *refer to page 474*.

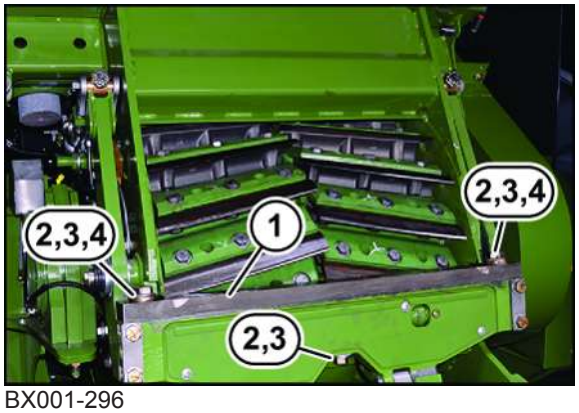

BX001-296

Turning/changing counterblade

- Grind the chopping blades with the grinding device, *refer to page 480*.
- Using the grinding control unit, adjust the counterblade (1) parallel to the ground surface of the blades, *refer to page 484*.
- Remove the hexagon head screws (2), the detent edged washers (3) and the washers (4).
- Pull the counterblade (1) forwards out of the support.
- Clean the skid surface area and the underside of the counterblade (1).

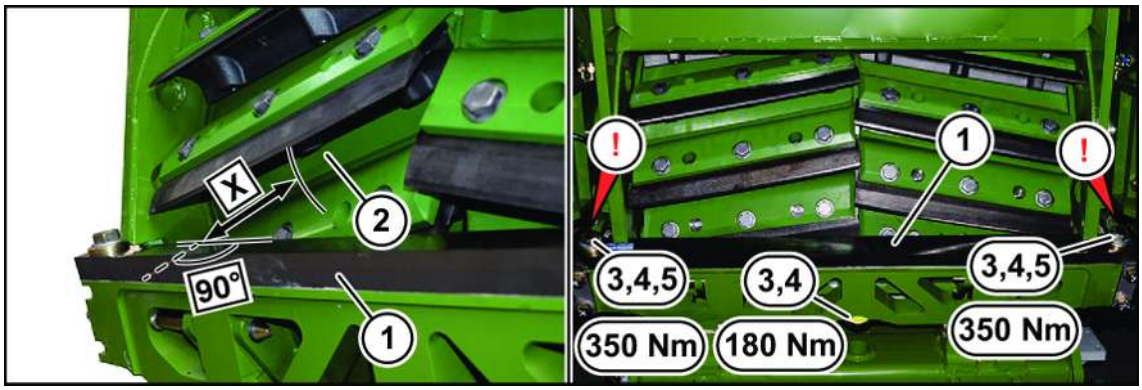

BX001-297

NOTICE
Damage to machine parts due to loose components If the counterblade is not securely attached, it may become detached and damage the blades on the chopping drum or the entire chopping drum. ▶ Secure the screw connections identified by ⓘ on the right and left of the machine with medium strength LOCTITE

Installing new counterblade

- Drive the counterblade support parallel to the cutter drum far enough so that the counterblade (1) can be attached.
- Position the new counterblade (1) on the counterblade support and attach hand-tight in the centre at the bottom using the hexagon head screws (3), the detent edged washers (4) and the washers (5).
- Align the counterblade (1) parallel to the ground blade backs on the counterblade support.

- Tighten all three screw connections on the counterblade using the indicated torque, see diagram BX001-297.
- Attach the intake unit, *refer to page 471*.
- Readjust the counterblade, *refer to page 484*.

27.10 Operating the mounting cart of the chopper unit (for "Chopper unit mounting cart" design)

27.10.1 Setting mounting cart

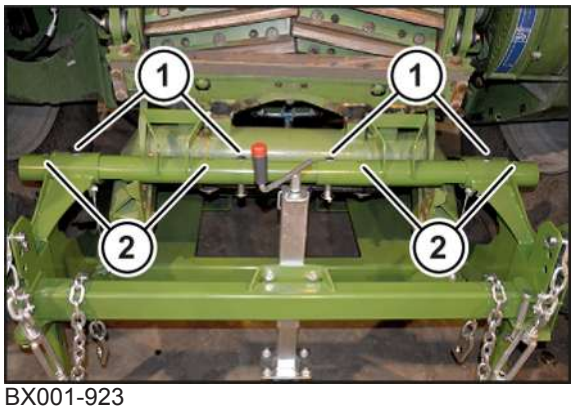

BX001-923

The retaining tubes of the mounting cart must be set according to the machine type.

The boreholes (2) must be used for machines with a chopping drum width of 630 mm.

The boreholes (1) must be used for machines with a chopping drum width of 800 mm.

Setting retaining tube

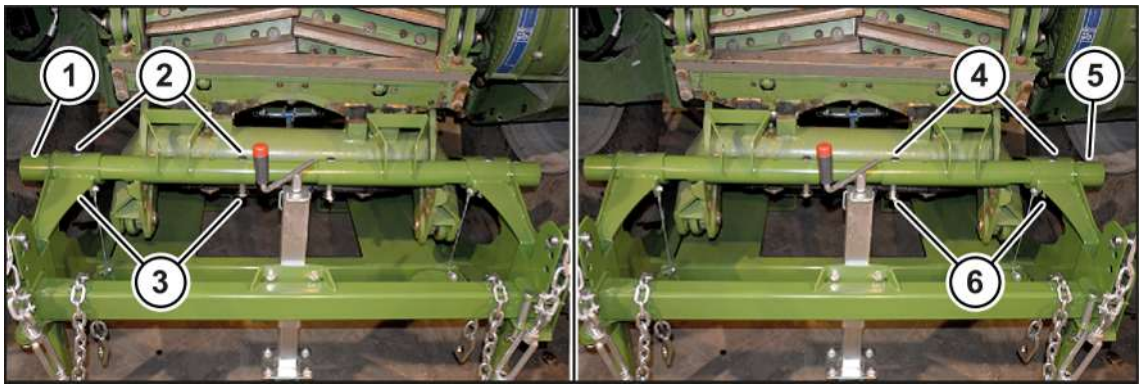

BX001-924

- Dismount the safety linch pins (3) and pull out the bolts (2) upwards.
- Push the right retaining tube (1) into the desired position.
- Mount the bolts (2) and secure them by means of the safety linch pins (3).
- Dismount the safety linch pins (6) and pull out the bolts (4) upwards.
- Push the left retaining tube (5) into the desired position.
- Mount the bolts (4) and secure them by means of the safety linch pins (6).

27.10.2 Parking mounting cart

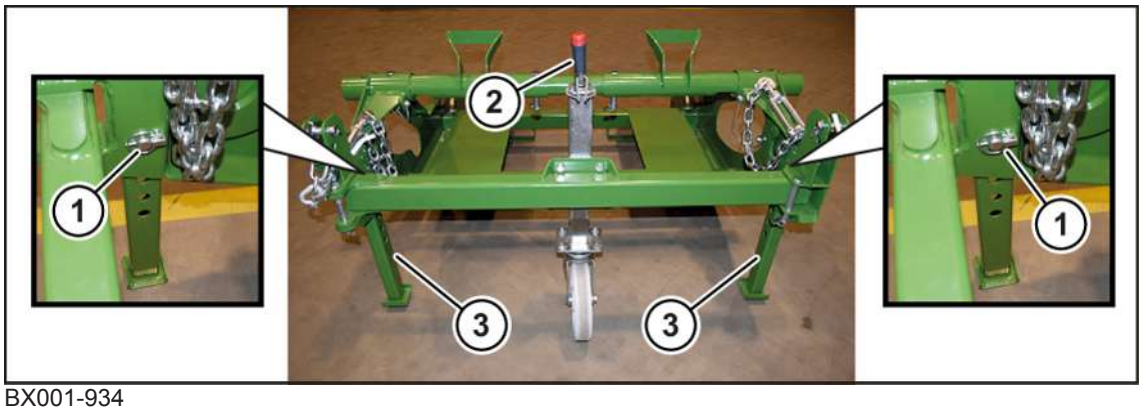

BX001-934

- In order to park the mounting cart with the removed chopping drum unit securely, remove the support jacks (3) and secure them with a bolt and a safety linch pin (1).
- Set the support wheel by means of the crank handle (2) so that the mounting cart is completely on the support jacks (3).

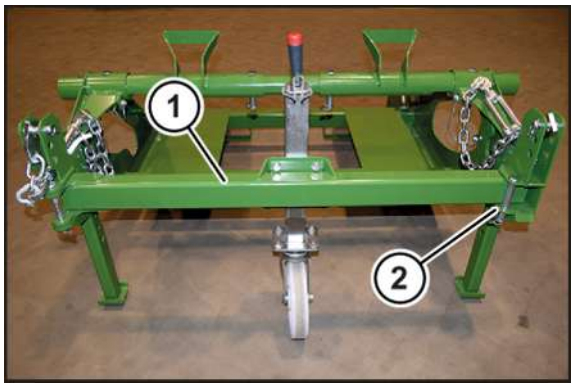

BX001-935

- In order to facilitate working at the chopping drum unit, dismount the linch pin and the bolt (2) and swivel the crossbar (1) to the side.

27.11 Turning or replacing conveyor bars of pre-compression roller

The pre-compression roller (1) is fitted with conveyor bars which have a smooth and a serrated side. The conveyor bars can be attached in such a way that either the smooth or the serrated side is used.

From experience the smooth side obtains the best results for grass operation and the serrated side for maize operation.

INFORMATION

The conveyor bars must be changed if the wear is so great that the conveyor bars are no longer higher than the crossbars on the pre-compression and feed roller.

INFORMATION

Due to metal detection, only fastening material made of anti-magnetic steel may be used. The screws must not be tightened with an impact wrench because of the magnetization effect as the metal detection triggers constantly if there are magnetized screws on the pre-compression roller.

Turning the conveyor bars on the pre-compression roller

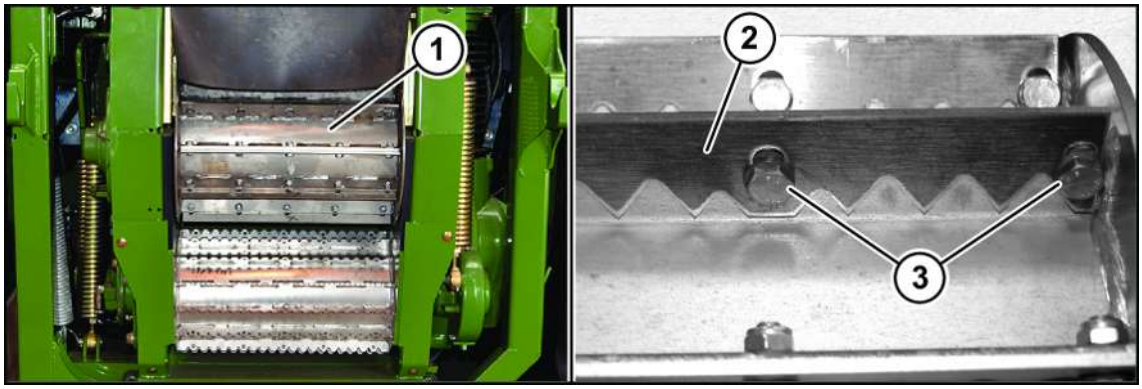

BXG000-086

- Remove the intake unit, *refer to page 468*.
- Shut down and secure the machine, *refer to page 34*.
- Remove the screws (3) from the conveyor bar (2).
- Turn the conveyor bar (2) and attach (tightening torque 35 Nm).

27.12 Changing conveyor bars on feed roller

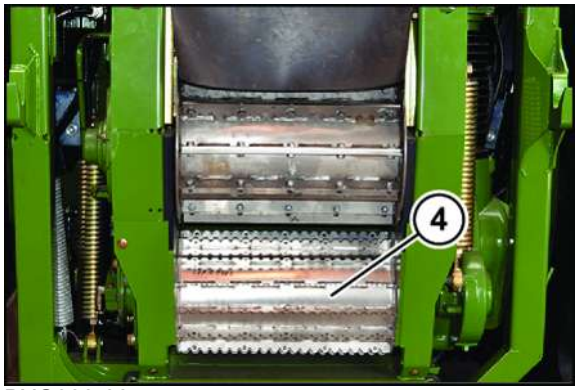

BXG000-087

The bottom feed roller (4) can also be fitted with conveyor bars.

These conveyor bars are used to protect the feed roller against wear and cannot be turned.

27.13 Adjusting the distance between the scraper and flat roller

⚠ *WARNING*

Damage to scraper and flat roller due to overheating

If the gap between the scraper and flat roller is too small, the scraper will exert pressure on the flat roller and overheating will result which could lead to fire. If there are damages or grooves on scraper or flat roller and if the gap between scraper and flat roller is too large, forage may accumulate there, heat up by friction and lead to fire.

- Check the scraper and the flat roller for damage and grooves.
- Adjust the gap between the scraper and the flat roller using tension springs and counter nuts until the scraper does not exert any pressure on the flat roller and the gap is not too large.

NOTICE

Machine damage caused by broken scraper

If the scraper is too thin, it may break, get into the crop flow and damage machine parts there.

- Check the thickness of the scraper according to maintenance table, *refer to page 414*.
- If the scraper is thinner than 24 mm, it must be replaced.

The adjustment is made on the removed intake unit.

The scraper must be adjusted, preferably with no gap, over the entire width of the flat roller.

The gap between the scraper and flat roller must be 0.3 mm to 0.6 mm

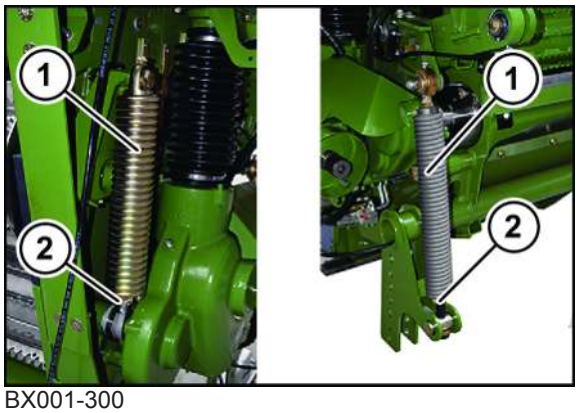

BX001-300

To relieve the tension springs:

- Loosen the counter nuts (2) on the tension springs (1) on the left and right machine sides.

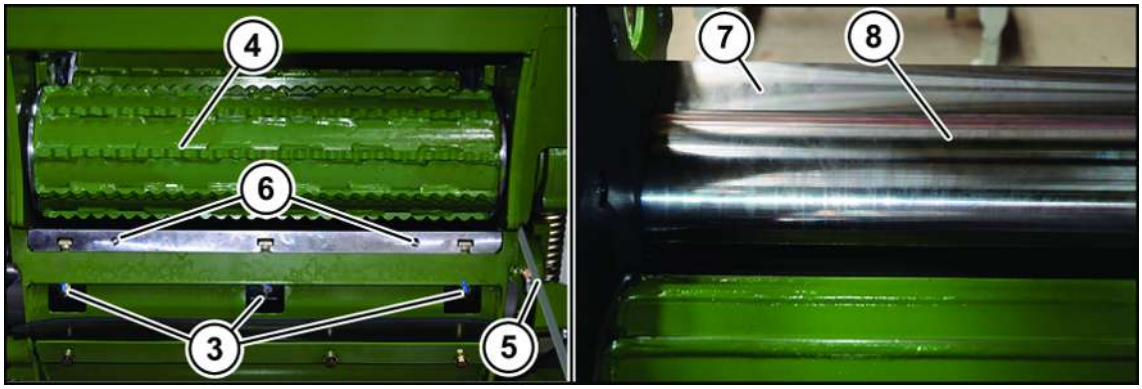

BX001-301

Setting distance between scraper and flat roller

- Loosen the 3 hexagon nuts (3).
- To check the gap between the scraper (7) and the flat roller (8) using a feeler gauge, press the compression roller upwards (4) using e.g. a mounting lever (5).

WARNING! Risk of injury due to the raised roller unit! Before measuring the gap, secure the roller unit from inadvertently dropping.

- Check the gap between the scraper (7) and the flat roller (8) using a feeler gauge.

If the gap is between 0.3 mm and 0.6 mm, the setting is correct.

If the gap is greater than 0.6 mm, the scraper must be readjusted.

- If required, readjust the scraper (7) evenly over the entire width by gently tapping it.

If the gap is between 0.3 mm and 0.6 mm, the setting is correct.

If the scraper is less than 0.3 mm, the scraper must be readjusted.

- If required, remove the scraper (7) with two hexagon head screws M12 in the forcing bores (6) evenly over the entire width of the flat roller.
- Check the gap between the scraper (7) and the flat roller (8) using a feeler gauge and readjust if required.

If the gap is between 0.3 mm and 0.6 mm, the setting is correct.

- Remove both hexagon head screws M12 from the forcing bores.

When the gap between the scraper and flat roller has been set

- Tighten the 3 hexagon nuts (3).
- Pretension the tension springs on both sides, *refer to page 513*.

27.14 Setting the gap compression roller-scraper

NOTICE

Machine damage caused by broken scraper

If the scraper is too thin, it may break, get into the crop flow and damage machine parts there.

- Check the thickness of the scraper according to maintenance table, *refer to page 414*.
- If the scraper is thinner than 24 mm, it must be replaced.

For an overview of the tightening torques, *refer to page 424*.

The setting is made on the removed intake unit.

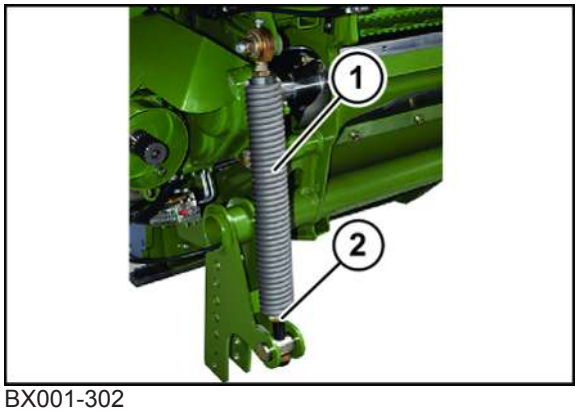

BX001-302

To relieve the rear tension springs:

- Loosen the counter nuts (2) on the rear tension springs (1) on the left and right machine sides.

To relieve the tension springs:

- Loosen the counter nuts (2) on the tension springs (1) on the left and right machine sides.

Adjusting the gap between the compression roller and scraper

The gap between the conveyor bars (1) of the compression roller and the scraper (3) must be X=3-8 mm.

- Check the dimension X between the conveyor bars (1) of the compression roller and the scraper (3).

If the dimension X is between 3 mm and 8 mm, the setting is correct.

If dimension X is < 3 mm, the gap X must be increased.

- Raise the top roller unit (4), with a mounting lever (5) for example.
- Place discs under the bump stops (2) of the intake unit.
- Measure the gap X.

If the gap a is X> 8 mm, gap a must be reduced.

- Raise the top roller unit (4), with a mounting lever (5) for example.
- Remove the discs from under the bump stops (2) of the intake unit.
- Measure the gap X.

When the distance between the compression roller and scraper has been set:

- Pretension the tension springs on both sides, *refer to page 513*.

27.15 Setting the tension springs of intake unit

For an overview of the tightening torques, *refer to page 424*.

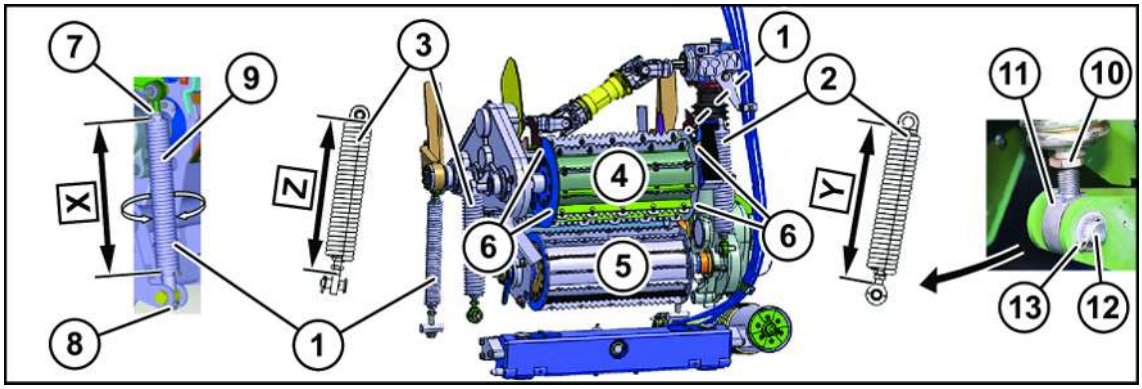

BX001-304

The rear tension springs on the left and right (1) must be pretensioned equally on both sides of the intake unit to the dimension X = 401 mm.

To pretension the tension springs if dimensions differ on the right and left sides of the machine:

- Loosen the counter nut (7).
- Loosen the screw (8).
- Turn the tension spring (9) until the dimension X = 401 mm has been reached.
- Tighten the screw (8).
- Tighten the counter nut (7).

The front tension spring on the left (2) and the front tension spring on the right (3) are not pretensioned.

The pre-compression roller (4) and the feed roller (5) can be adjusted parallel to each other using the front tension springs on the left and right.

To adjust the pre-compression roller (4) and the feed roller (5) parallel to each other on the right and left sides of the machine:

- Remove the cotter pin (13) and the bolt (12).
- Loosen the counter nut (10).
- Until the pre-compression roller (4) has been set parallel to the feed roller (5), adjust the spring length (Y, Z) using the threaded piece (11).

- Ensure that the rollers in the outside area (6) do not touch the wear plates.
- Tighten the counter nut (10).
- Insert the bolt (12) and secure with the cotter pin (13).

28 Maintenance - Crop Flow

⚠ WARNING

Risk of injury due to non-observance of relevant safety notices

If the relevant safety notices are not observed, persons may get seriously injured or killed.

▶ To avoid accidents, the basic safety instructions must be read and observed, *refer to page 19*.

⚠ WARNING

Risk of injury due to non-observance of safety instructions

If the relevant safety routines are not observed, persons may be seriously injured or killed.

▶ The safety routines must be read and observed to avoid accidents, *refer to page 34*.

To obtain the best possible crop flow, the wear plates of the individual components must be checked and, if required, replaced. The wear plates are worn if there are severe worn-out areas resulting in small retaining edges.

The following components must be checked:

- Intake unit
- Drum base
- Transfer shaft
- Grass channel
- Corn conditioner (wedge on right / left)
- Discharge accelerator (housing, rear wall)
- Channel support at top
- Spout

28.1 Access points to crop flow

The crop flow is accessed via the maintenance flaps, e.g. to eliminate crop blockages in the crop flow.

Before opening the maintenance flaps

▶ Shut down and secure the machine, *refer to page 34*.

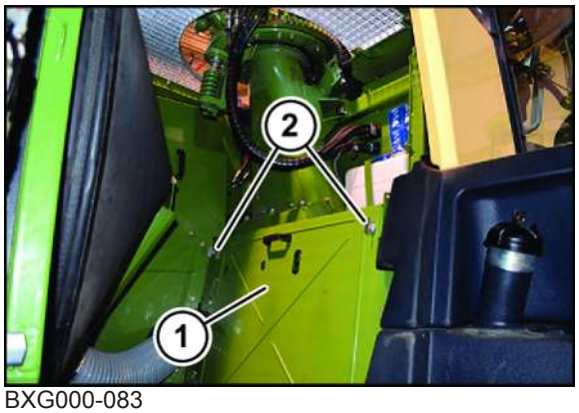

BXG000-083

To access the maintenance flaps of the lower crop flow, remove the cover (1).

▶ Loosen the quarter turn fasteners (2) and remove the cover (1).

28.1.1 Removing grass channel

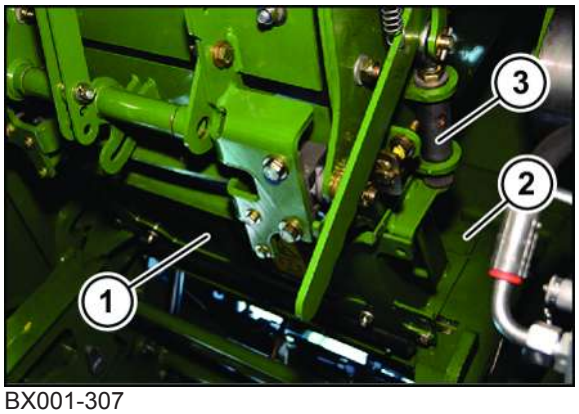

BX001-307

The grass channel (1) is held in the bottom of the transfer shaft in a cranked retaining sheet (2) and at the top by two guided retaining bolts (3) on the discharge accelerator.

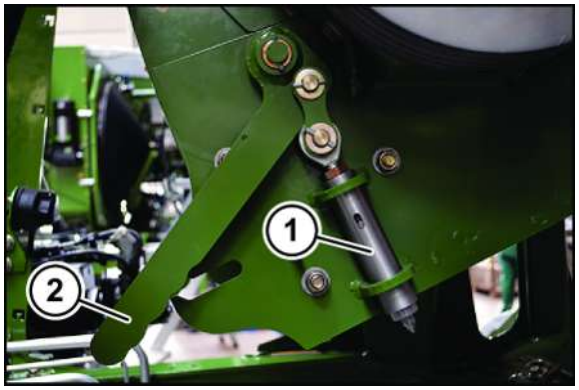

BX001-308

The retaining bolts (1) of the grass channel are attached to the right and left sides of the discharge accelerator and are each moved in their guides by a lever (2).

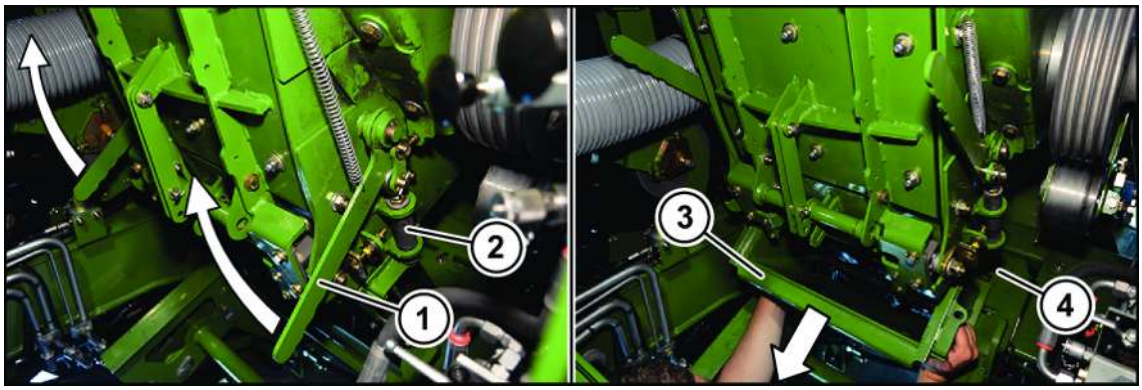

BX001-309

To remove the grass channel:

- Move the lever (1) upwards on the right and left sides of the machine.
- Pull the grass channel (3) backwards out of the retaining sheet (4).

28.1.2 Installing grass channel

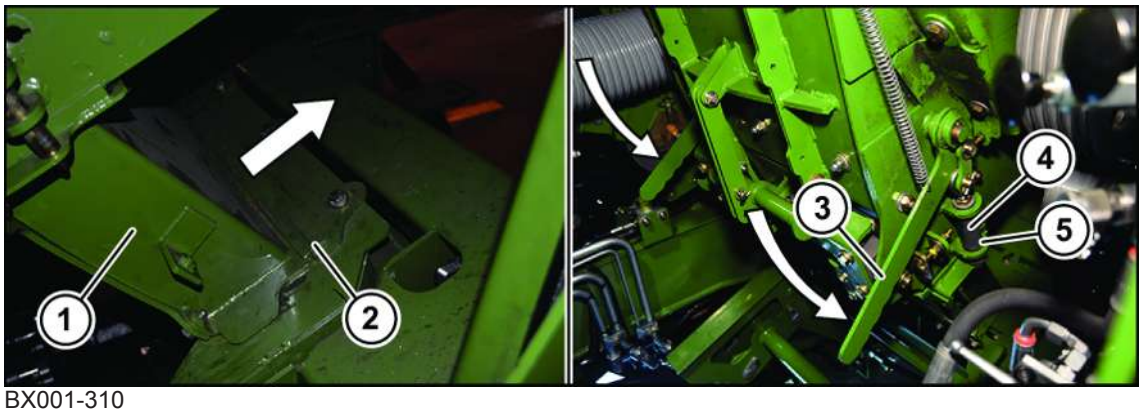

BX001-310

To install the grass channel:

- Push the grass channel (1) forwards between the discharge accelerator and transfer shaft until the rear flange of the grass channel runs into the retaining sheet (2).
- Move the lever (3) downwards and ensure that the bolt (4) runs into the hole pattern (5) in the grass channel on the right and left machine sides.

28.1.3 Opening maintenance flap transfer shaft

For an overview of the tightening torques, *refer to page 424*.

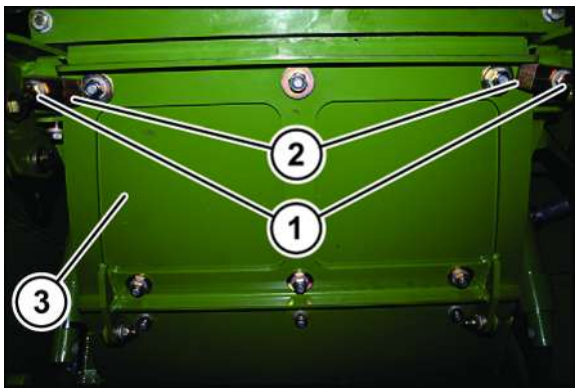

BXG000-085

- Loosen the hexagon head screws (1) and turn the clamping pieces (2) to the side.
- Fold down the maintenance flap (3).
- When the maintenance work is complete, fold up the maintenance flap (3), turn the clamping pieces (2) in front of the maintenance flap and secure with the hexagon head screws (1).

28.1.4 Removing rear wall of discharge accelerator

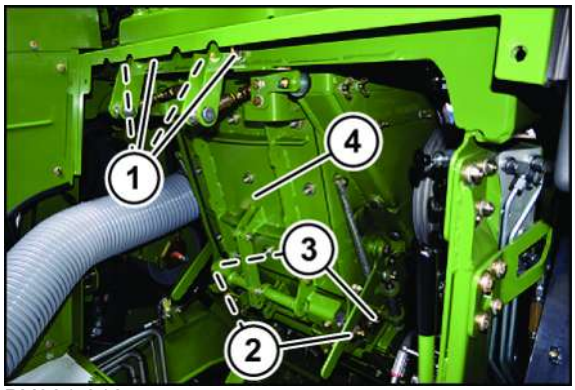

BX001-312

- Remove the hexagon head screws (1) on the holder of the rear wall of discharge accelerator.
- Loosen the hexagon head screws M16 (2).
- Unscrew hexagon nuts and threaded spindles (3).
- Remove rear wall of discharge accelerator (4).
- Install rear wall of discharge accelerator, *refer to page 518*.

28.1.5 Installing rear wall of discharge accelerator

For an overview of the tightening torques, *refer to page 424*.

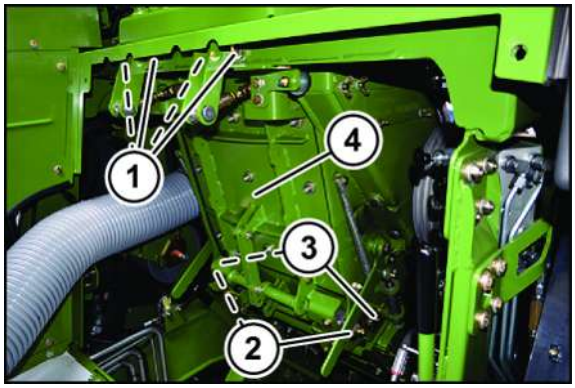

BX001-312

✓ The machine is shut down and safeguarded, *refer to page 34*.

- Insert rear wall of discharge accelerator (4).
- Mount hexagon nuts and threaded spindles (3).
- Tighten hexagon head screws M16 (2).
- Mount hexagon head screws (1) on the support of rear wall of discharge accelerator.
- Set rear wall of discharge accelerator,*refer to page 406*.

28.1.6 Removing maintenance flap in channel support

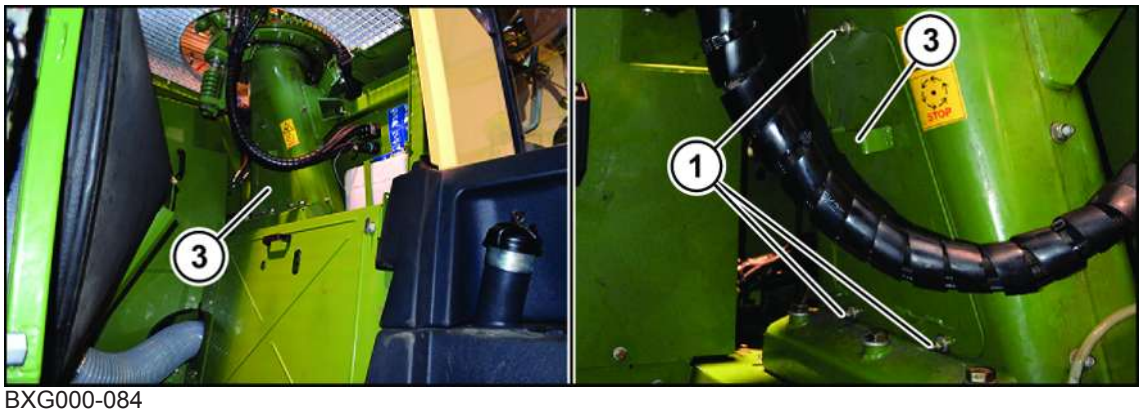

BXG000-084

- Screw out the hexagon head screws (1).
- Remove the maintenance flap (3).
- When the maintenance work is complete, attach the maintenance flap (3) and secure with the hexagon head screws (1).

28.1.7 Opening maintenance flap in the spout

⚠ WARNING

Ris of injury due to falling

There is a risk of falling when working at heights on the machine. As a result, people may be seriously injured or killed.

- Make sure you stand securely.
- Use a suitable fall protection.
- Secure the area below the assembly point against falling objects.

For an overview of the tightening torques, *refer to page 424*.

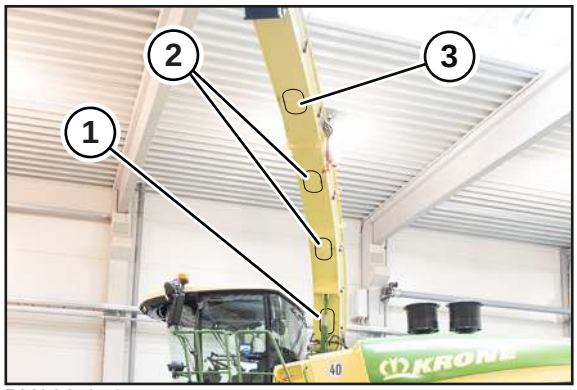

BX002-079

- Open the maintenance flap (1) and the maintenance flap (3) (version with "Spout extension") on the spout from the roof.
- To open the maintenance flaps (2), swivel the spout forwards on the left and lower until the maintenance flaps are accessible from the platform.

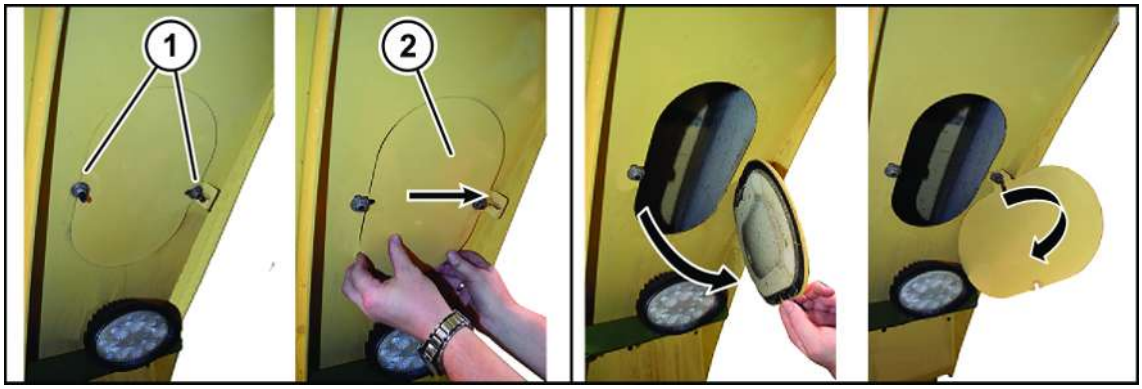

BX001-609

- Loosen the nuts (1) and push the maintenance flap (2) to the side.
- Open and turn the maintenance flap.
- When the maintenance work is complete, turn back and close the maintenance flap (2).
- Push the maintenance flap (2) into the original position and tighten the screws (1).

28.2 Maintenance corn conditioner

Before using the corn conditioner, the rollers should be checked for wear. Worn rollers no longer achieve the required conditioning quality and the crops are no longer accepted so well, possibly resulting in crop blockages.

BX001-315

- To check the wear of the rollers, the corn conditioner must be removed or must be moved all the way backwards on the swivel device.
- Place a ruler (1) on one tooth of the rollers.
- The gap between the roller and ruler should not be greater than X= 1 mm. Otherwise it is recommended to replace the rollers.

28.3 Maintenance discharge accelerator

28.3.1 Checking discharge scoops

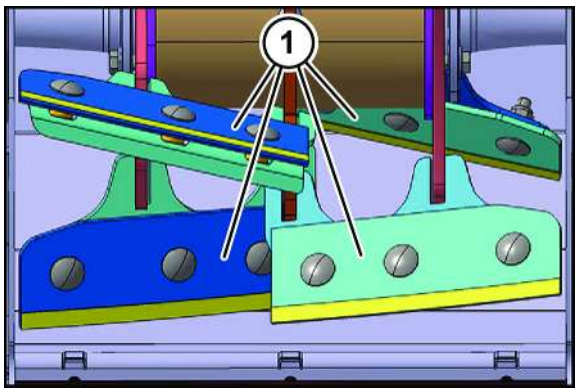

BXG000-094

- ▶ To check the discharge scoops (1), remove the maintenance flap from the channel support.
- ▶ Examine the discharge scoops:
  - There should be no major damage, e.g. caused by stones, resulting in forage wrapping around the discharge scoop.
  - The edge of the discharge scoops should not be severely eroded so that the distance to the rear wall is always even.

28.3.2 Removing/installing discharge scoops

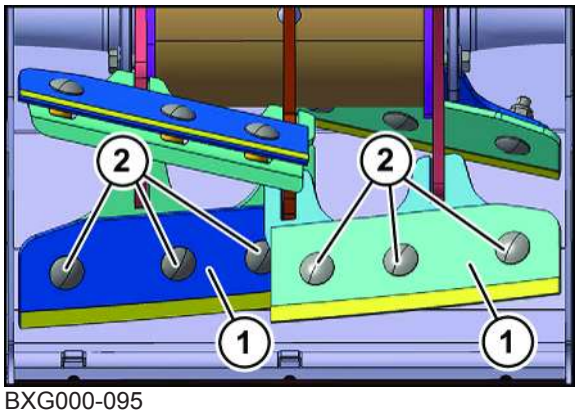

BXG000-095

Removing discharge scoops

Prerequisite:

- ✓ Rear wall of discharge accelerator has been removed, *refer to page 518*.
- ▶ To remove the discharge scoops, remove the screw connections (2).
- ▶ Remove discharge scoops (1).

Installing discharge scoops

NOTICE
Damage to discharge accelerator If the discharge scoops are not replaced in pairs, an imbalance may occur during operation and lead to subsequent damage on the machine. ▶ Always replace the discharge scoops in pairs and opposite each other.

- ▶ Clean supporting surface of the rotor.
- ▶ Fix new discharge scoops (1) with news screws (2) hand-tight.
- ▶ Pull the discharge scoops outwards (towards the rear wall) and tighten the screws (2) to a tightening torque of 95 Nm.
- ▶ Check distance of the scraper and adjust if required, *refer to page 522*.
- ▶ Mount rear wall of discharge accelerator.
- ▶ Check settings of the rear wall to the discharge scoops and adjust if required, *refer to page 406*.

28.3.3 Checking and adjusting discharge accelerator scraper

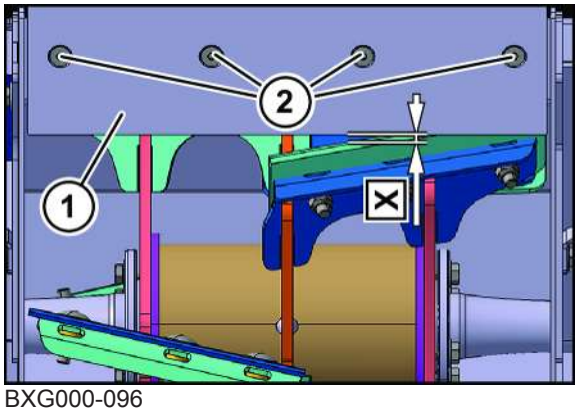

BXG000-096

Checking the scraper

- ▶ To check the scraper, remove the maintenance flap from the channel support.
- ▶ Examine the scraper:
  - There should be no major damage, e.g. caused by stones.
  - The edge of the scraper should not be severely eroded so that the gap to the discharge scoop is always even.

Replacing scraper:

- ✓ Rear wall of discharge accelerator has been removed, *refer to page 518*.
- ▶ To remove the scraper (1), remove the screws (2).
- ▶ Remove the scraper and replace with a new one.
- ▶ Attach the new scraper hand-tight using the two outer screws.
- ▶ Position the scraper so that the gap between the scraper and discharge scoop is evenly **X =1 mm** over the whole width.
- ▶ Screw in both middle screws and tighten with "Medium strength" threadlocker to a tightening torque of 39 Nm.

- Unscrew both outer screws and tighten with "Medium strength" threadlocker to a tightening torque of 39 Nm.
- Mount rear wall of discharge accelerator.
- Check settings of the rear wall to the discharge scoops and adjust if required, *refer to page 406*.

28.4 Setting corn conditioner

NOTICE
Damage to the adjusting motor caused by the impact screwdriver If the screw on the adjusting motor is turned with an impact screwdriver, the adjusting motor will be damaged. ▶ Manually turn the screw on the adjusting motor using an Allen key only.

For an overview of the tightening torques, *refer to page 424*.

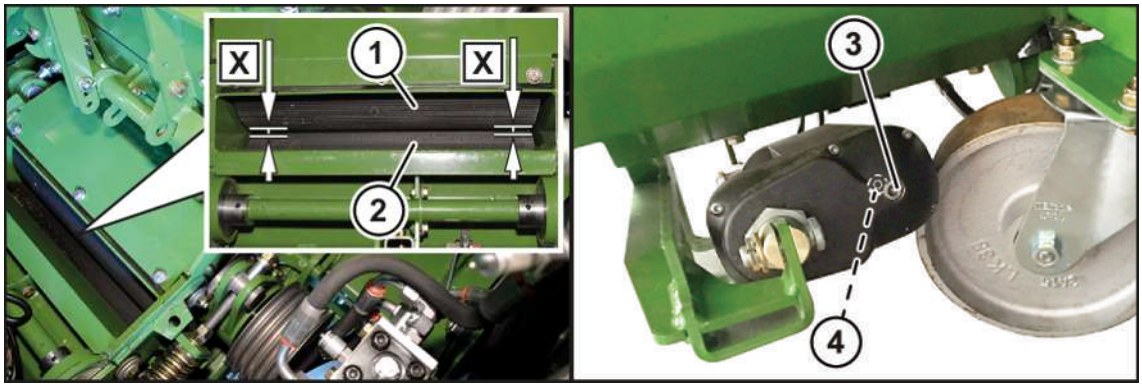

BX001-418 / BX002-049

If the measured roller distance X between the corn conditioner rollers (1, 2) differs from the information on the terminal or the distance X of the rollers on the left and right is not the same, the stops on the corn conditioner must be adjusted.

Before adjusting the corn conditioner, ensure that the adjusting motor of the corn conditioners has been fully extended:

- Using an Allen key W/F 6, remove the screw (3).
- Using an Allen key W/F 6, fully extend the adjusting motor by hand using the setting screw (4).
- Mount the screw (3).

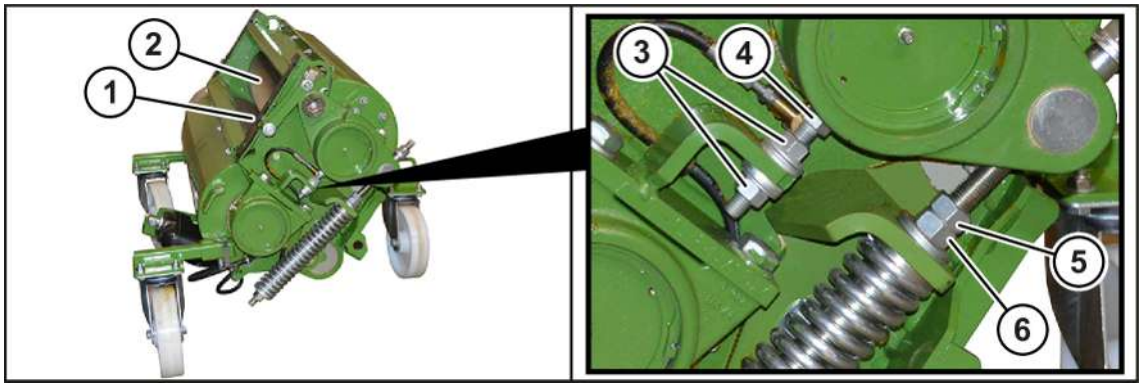

BX002-048

- Set the distance (X) of the corn conditioner rollers (1, 2) on the terminal to 0.5 mm, *refer to page 153*.
- Measure the distance (X) of the corn conditioner rollers (1, 2) using a feeler gauge on the left and right of the corn conditioner.

If the distance on both sides of the corn conditioner is X=0.5 mm, the setting is correct.

If the distance on both sides of the corn conditioner is not X=0.5 mm, the corn conditioner stops must be adjusted.

To adjust the stops on the corn conditioner, on one side of the corn conditioner first:

- Loosen the nuts (3).
- To remove the screw head from the housing, screw in the screw (4).
- Loosen the counter nut (5).
- Using the nut (6), adjust the distance of the corn conditioner rollers until the distance-is X=0.5 mm.
- Tighten the lock nut (5).
- Unscrew the screw (4) until the screw head is positioned on the housing.
- Tighten the nuts (3).
- Then repeat this process on the other side of the corn conditioner.

When the distance of the corn conditioner rollers has been set on both sides:

- Measure the distance (X) of the corn conditioner rollers (1, 2) using a feeler gauge on the left and right of the corn conditioner.

If the distance on both sides of the corn conditioner is X=0.5 mm, the setting is correct.

If the distance on both sides of the corn conditioner is not X=0.5 mm, the setting is not correct.

- Repeat the adjustment process.

29 Maintenance - Hydraulic System

⚠ WARNING

Risk of injury due to non-observance of relevant safety notices

If the relevant safety notices are not observed, persons may get seriously injured or killed.

- To avoid accidents, the basic safety instructions must be read and observed, *refer to page 19*.

⚠ WARNING

Risk of injury due to non-observance of safety instructions

If the relevant safety routines are not observed, persons may be seriously injured or killed.

- The safety routines must be read and observed to avoid accidents, *refer to page 34*.

⚠ WARNING

Hydraulic hoses are subject to ageing

Hydraulic hoses may wear depending on pressure, heat load and the effect of UV rays. People can be seriously injured or killed by damaged hydraulic hoses.

The date of manufacture appears on the hydraulic hoses. This way the age can be ascertained quickly.

Replacement of the hydraulic hoses is recommended after a lifetime of six years.

- Use original spare parts when replacing hoses.

NOTICE

Damage to the machine due to soiling of the hydraulic system

If foreign objects or liquids get into the hydraulic system, the hydraulic system may be severely damaged.

- Clean hydraulic connections and components before removal.
- Seal open hydraulic connections with protective caps.
- Ensure that foreign objects or liquids do not get into the hydraulic system.

NOTICE

Storing and disposing of oils and used oil filters

If oil and used oil filters are not stored and disposed of properly, the environment may be damaged.

- Store or dispose of used oil and oil filters according to statutory provisions.

29.1 Pressure limiting valves

The control blocks have been equipped with pressure limiting valves. These valves were preset in the factory and must not be changed.

NOTICE
The pressure limiting valves on the machine have been preset in the factory. Work on the pressure limiting valves may be performed by KRONE customer service only.

29.2 Hydraulic oil

NOTICE
Damage to the hydraulic system caused by non approved hydraulic oils If non-approved hydraulic oils or a mixture of different oils are used, the hydraulic system may be damaged. ▶ Never mix different types of oil. ▶ Never use engine oil. ▶ Use approved hydraulic oils only.

Filling quantities and types of oil, *refer to page 67*.

29.3 Maintaining hydraulic oil tank

For an overview of the tightening torques, *refer to page 424*.

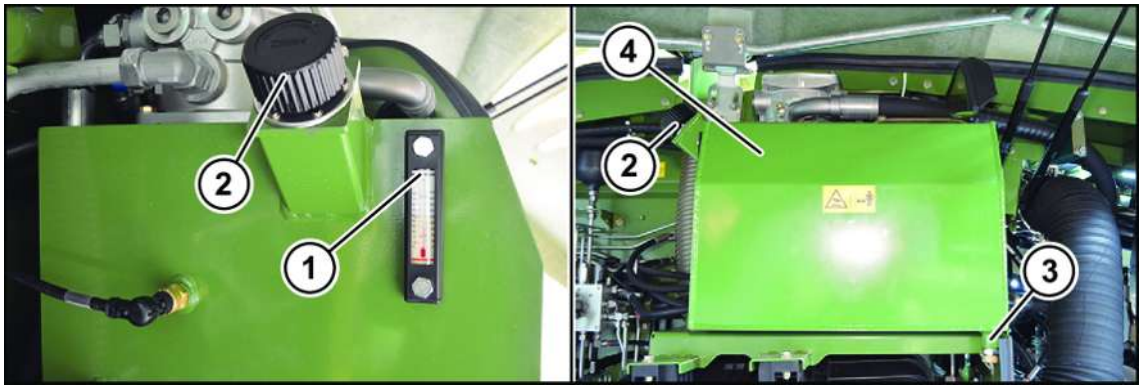

BXG000-035

▶ Comply with the safety routine "Safe execution of oil level check, oil and filter element exchange", *refer to page 35*.

Checking hydraulic oil tank level

▶ Move the spout to the parking position.

To check the oil level:

The hydraulic oil must be topped up to the middle of the inspection glass (1).

▶ If required, top up hydraulic oil via the oil filling pipe (2).

Changing oil in the hydraulic oil tank

- Move the spout to the parking position.
- Provide a collecting vessel (approx. 130 litres).
- Clean thoroughly around the oil drain sleeve (3).
- Place the end of the oil drain hose (enclosed with the machine) in the collecting vessel. Attach the other end of the hose to the oil drain sleeve (3) of the hydraulic oil tank (4). As a result, the oil drain valve is automatically opened and the hydraulic oil flows into the collecting vessel.
- Remove the drain hose.
- Top up the hydraulic oil in the hydraulic oil tank up to the middle of the inspection glass via the oil filling pipe (2). Amount and specification, *refer to page 67*.
- Run the diesel engine at a low idle speed for approx. 10 seconds.
- Turn off the diesel engine.
- Check the hydraulic oil tank level, top up the hydraulic oil if required.
- Repeat the process until the oil level no longer drops.

Changing hydraulic tank return suction filter

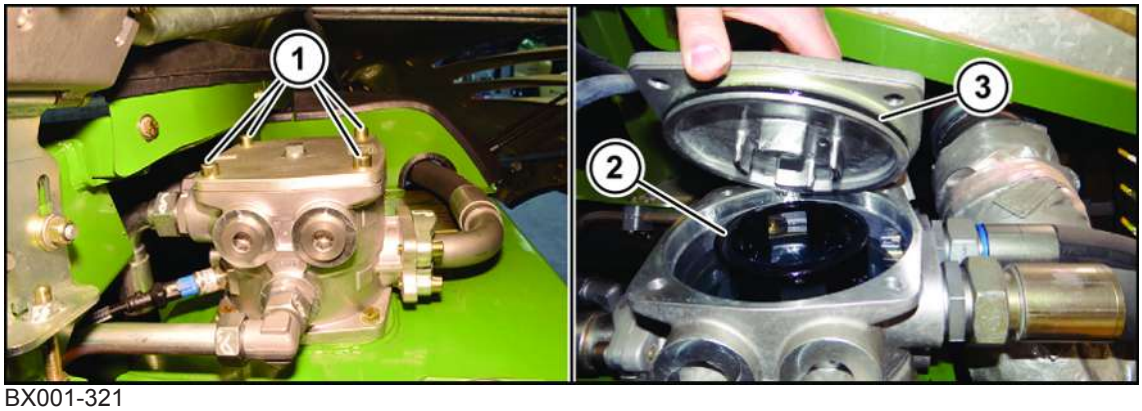

BX001-321

✓ The machine is shut down and safeguarded, *refer to page 34*.
- To drain the pressure from hydraulic oil tank, open the oil filling pipe of the hydraulic oil tank.
- Unscrew the screws (1) on the cover and remove the cover.
- Gently turn the filter separating plate and pull out with the attached filter element (2) and drain the hydraulic oil.
- Disassemble the removed unit into separating plate, filter element and pan.
- Clean housing, cover, separating plate and dirt collecting basket.
- Assemble new filter element, separating plate and pan.
- Wet the sealing surfaces and O-rings of the new filter element with oil and insert by gently turning it.
- Install a new O-ring seal (3) on the cover.
- Attach the cover and screw in the screws (1).
- Start diesel engine and let it run at idle speed.
- Vent the return suction filter.
- Check the return suction filter for leaks.

29.4 Changing the high-pressure filter

For an overview of the tightening torques, *refer to page 424*.

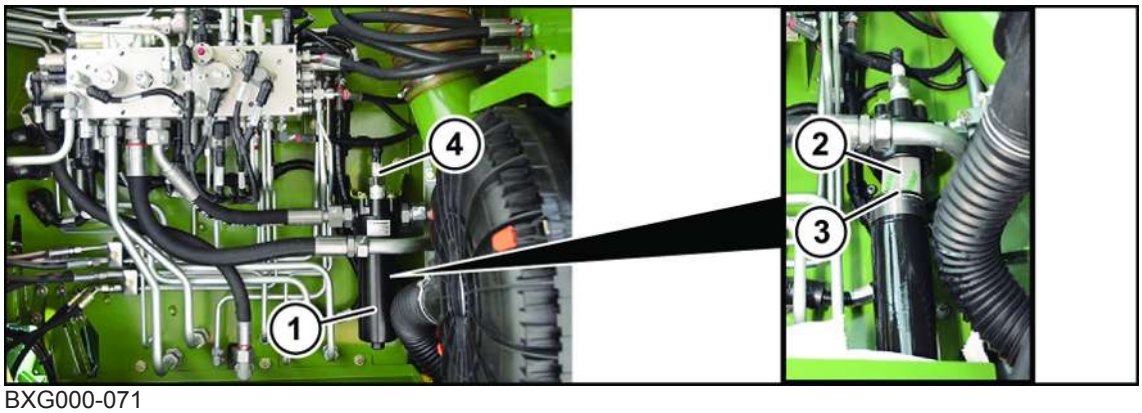

BXG000-071

The high-pressure filter (1) features an electrical contamination indicator (4).

Changing the high-pressure filter

✓ The machine is shut down and safeguarded, *refer to page 34*.

- Remove and clean the filter housing (1).
- By gently moving the filter element (2) back and forth, remove it downwards from the retainer piece and replace it with a new filter element.
- Check the O-ring seal (3) for damage and replace if required.
- Wet the thread and the sealing surfaces with hydraulic oil.
- Mount the filter housing (1).
- Start the diesel engine and check the screw connections of the high-pressure filter for leaks.

29.5 Checking hydraulic hoses

Hydraulic hoses are subject to natural aging. This limits their service life. The recommended service life is 6 years, including a maximum storage time of 2 years. The date of manufacture is printed on the hydraulic hoses. When checking hydraulic hoses, the state-specific conditions (e.g., BGVU) must be observed.

Performing a visual inspection

- Visually inspect all hydraulic hoses for damage and leaks and have them replaced by an authorised specialist if necessary.

30 Maintenance - Gearbox

⚠ WARNING

Risk of injury due to non-observance of relevant safety notices

If the relevant safety notices are not observed, persons may get seriously injured or killed.

- ▶ To avoid accidents, the basic safety instructions must be read and observed, *refer to page 19*.

⚠ WARNING

Risk of injury due to non-observance of safety instructions

If the relevant safety routines are not observed, persons may be seriously injured or killed.

- ▶ The safety routines must be read and observed to avoid accidents, *refer to page 34*.

✓ The machine is shut down and safeguarded, *refer to page 34*.

30.1 Overview of gearboxes

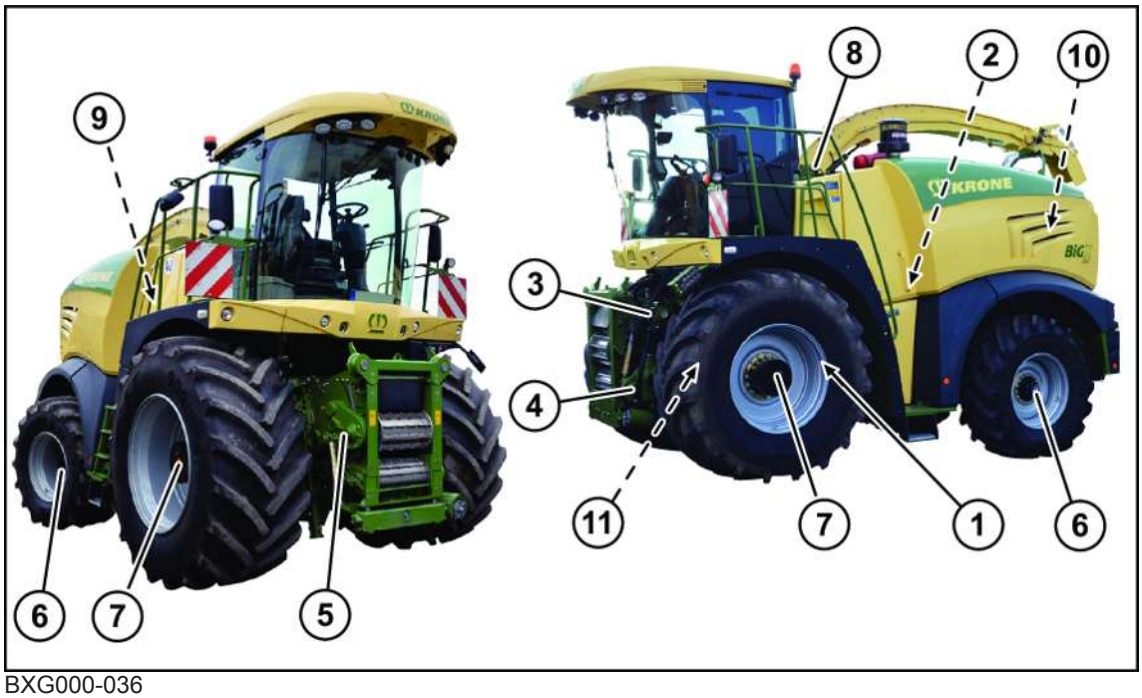

BXG000-036

1	Transfer gearbox	7	Front wheel motor
2	Intermediate gearbox	8	Rotary drive gearbox spout
3	Intermediate gearbox intake	9	Fan gearbox
4	Lower roller gearbox	10	Power take-off gear
5	Upper roller gearbox	11	VariLOC chop length gearbox
6	Rear wheel motor		

30.2 Maintaining transfer gearbox

BX001-324

- Comply with the safety routine "Safe execution of oil level check, oil and filter element exchange", *refer to page 35*.

Check oil level

- Unscrew the locking screw of the inspection hole (1).
  - ⇨ If the oil reaches up to the inspection hole (1):
  - Screw the locking screw into the inspection hole (1), tightening torque *refer to page 427*.
  - ⇨ If the oil does not reach up to the inspection hole (1):
  - Refill with fresh oil up to the inspection hole (1) via the inspection hole (1).
  - Screw the locking screw into the inspection hole (1), tightening torque *refer to page 427*.

Changing oil

- ✓ A suitable container is available for escaping oil.
- Unscrew the locking screw of the inspection hole (1) and the drain plug (2) and drain the oil.
- Mount the drain plug (2), tightening torque *refer to page 427*.
- Refill with fresh oil up to the inspection hole (1) via the inspection hole (1).
- Mount the locking screw of the inspection hole (1), Anziehdrehmoment *refer to page 427*.

30.3 Maintaining intermediate gearbox

NOTICE

Damage to the gearbox by foreign bodies in the gearbox oil.

If the low-pressure filter of gearbox oil cooling is not replaced whenever the oil is changed, foreign bodies could get into the gearbox oil and damage the gearbox.

- Whenever the oil is changed, also replace the low-pressure filter of gearbox oil cooling,*refer to page 531*.

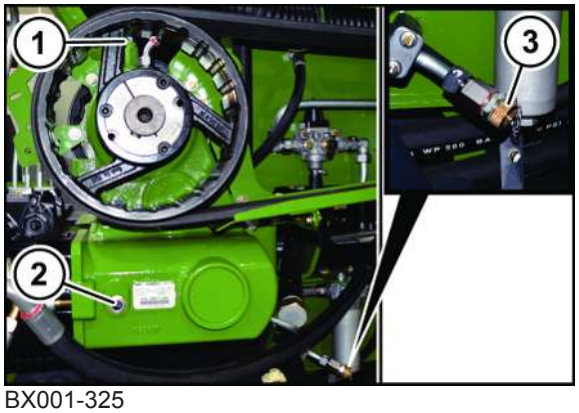

BX001-325

- Comply with the safety routine "Safe execution of oil level check, oil and filter element exchange", *refer to page 35*.

Checking oil level

- Start the diesel engine, switch on the main coupling, let both run approx. 1 min and then switch off the diesel engine.

The oil level must reach the middle of the viewing glass (2).

If the oil does not reach the middle of the viewing glass (2):

- Remove the locking screw from the oil filling hole (1).
- Top up oil via oil filling hole (1) until the middle of the viewing glass (2) is reached.
- Screw the locking screw into the oil filling hole (1), tightening torque *refer to page 427*.

Changing oil:

✓ A suitable container is available for escaping oil.

- Remove the locking screw from the oil filling hole (1).
- Remove the cap from the drain sleeve (3) and drain the oil.
- Attach the cap to the drain sleeve (3), tightening torque *refer to page 427*.
- Refill with fresh oil via the oil filling hole (1) up to the middle of the inspection glass (2).
- Screw the locking screw into the oil filling hole (1), tightening torque *refer to page 427*.

Changing the low-pressure filter

BXG000-028

Replacing the Filter Element

✓ A suitable container is available for escaping oil.

- ▶ Dismount the guard sheet (5).
- ▶ Remove and clean the filter housing (1).
- ▶ Remove the filter element (2) and replace with a new filter.
- ▶ Check the O-ring seals (3, 4) for damage and replace if required.
- ▶ Wet the thread and the sealing surfaces with hydraulic oil.
- ▶ Mount the filter housing (1) and tighten to 60 Nm.
- ▶ Mount the guard sheet (5).
- ▶ Charge the hydraulic system with pressure and check for leaks.

Checking oil level after changing the oil filter and low-pressure filter

- ▶ Start the diesel engine, switch on the main coupling, run both for 1 min and then switch off the diesel engine.
- ▶ Check the oil level on the intermediate gearbox.

When the oil reaches the middle of the inspection glass, the oil change on the intermediate gearbox is complete.

If the oil does not reach the middle of the inspection glass:

- ▶ Top up oil, *refer to page 530*

30.4 Maintaining intermediate gearbox intake

NOTICE
Damage to gearbox caused by incorrect amount of oil If the intake is not horizontal when checking the oil level and changing the oil, it may occur that there is too much or too less oil in the gearbox. ▶ Ensure that the intake housing cover is horizontal when checking the oil level and changing the oil.

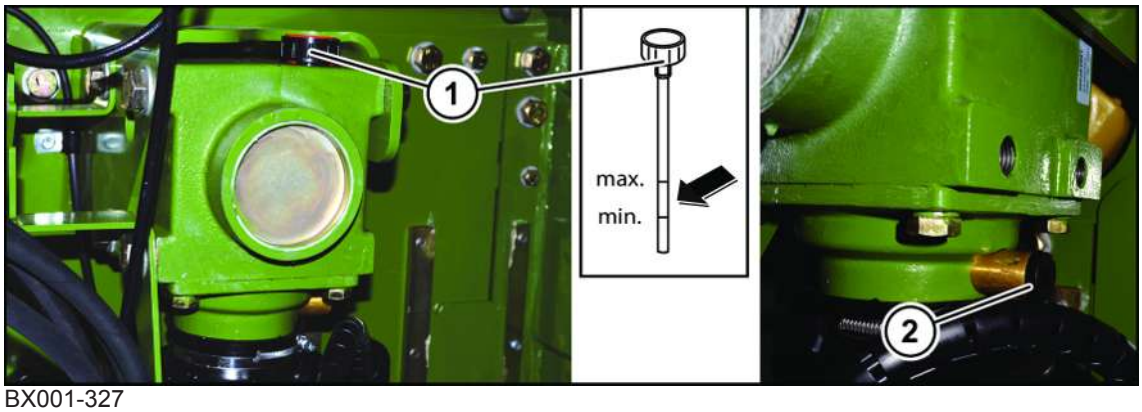

BX001-327

- ▶ Comply with the safety routine "Safe execution of oil level check, oil and filter element exchange", *refer to page 35*.

Check oil level

- Thoroughly clean the area around the oil dipstick (1).
- Pull out the oil dipstick (1), clean and push in all the way. Use a lint-free cloth to clean the oil dipstick.
- Pull out the oil dipstick (1) and check the oil level.
  - ⇨ If the oil level is indicated between the "min." and "max." marks:
  - Push in the oil dipstick (1).
  - ⇨ If the oil level is indicated below the "min." mark:
  - Refill the oil above the filling hole.
  - Check the oil level.

Change oil

- ✓ A suitable container is available for escaping oil.
- Turn out the oil dipstick (1).
- Unscrew the oil drain plug (2) and drain the oil.
- Screw in the drain plug (2), tightening torque *refer to page 427*.
- Fill in new oil through the filling hole.
- Check the oil level.

30.5 Maintaining bottom roller gearbox

NOTICE
Damage to gearbox caused by incorrect amount of oil If the intake is not horizontal when checking the oil level and changing the oil, it may occur that there is too much or too less oil in the gearbox. ▶ Ensure that the intake housing cover is horizontal when checking the oil level and changing the oil.

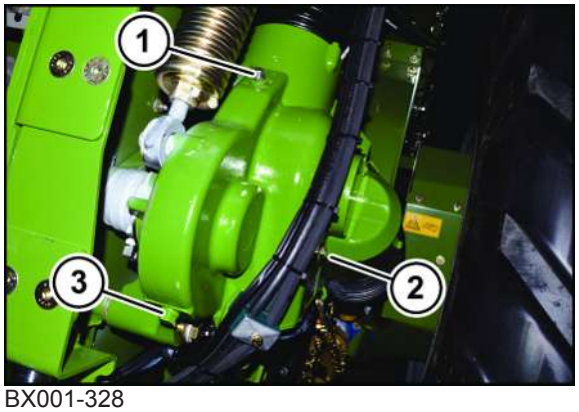

BX001-328

- Comply with the safety routine "Safe execution of oil level check, oil and filter element exchange", *refer to page 35*.

Checking oil level

- Start the diesel engine, switch on the main coupling, let both run approx. 1 min and then switch off the diesel engine.

The oil level must reach the middle of the viewing glass (2).

If the oil does not reach the middle of the viewing glass (2):

- ▶ Remove the locking screw from the oil filling hole (1).
- ▶ Top up oil via oil filling hole (1) until the middle of the viewing glass (2) is reached.
- ▶ Screw the locking screw into the oil filling hole (1), tightening torque *refer to page 427*.

Changing oil

- ✓ A suitable container is available for escaping oil.
- ▶ Unscrew the locking screw of the filling hole (1).
- ▶ Unscrew the drain plug (3) and drain the oil.
- ▶ Mount the drain plug (3), tightening torque*refer to page 427*.
- ▶ Top up new oil the via filling hole (1) up to the middle of the viewing glass (2).
- ▶ Screw in the locking screw of the filling hole (1) and tighten it firmly, Tightening torque *refer to page 427*.

30.6 Maintaining top roller gearbox

NOTICE
Damage to gearbox caused by incorrect amount of oil If the intake is not horizontal when checking the oil level and changing the oil, it may occur that there is too much or too less oil in the gearbox. ▶ Ensure that the intake housing cover is horizontal when checking the oil level and changing the oil.

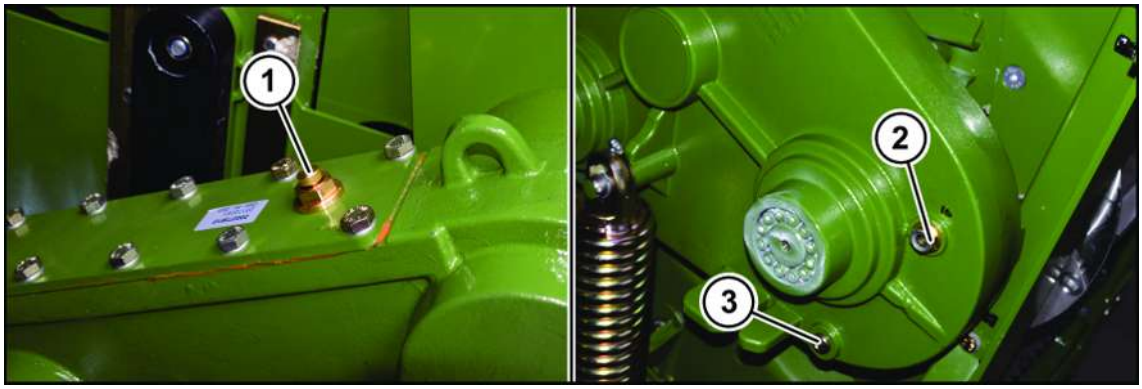

BX001-329

- ▶ Comply with the safety routine "Safe execution of oil level check, oil and filter element exchange", *refer to page 35*.

Checking oil level

- ▶ Start the diesel engine, switch on the main coupling, let both run approx. 1 min and then switch off the diesel engine.

The oil level must reach the middle of the viewing glass (2).

If the oil does not reach the middle of the viewing glass (2):

- ▶ Remove the locking screw from the oil filling hole (1).
- ▶ Top up oil via oil filling hole (1) until the middle of the viewing glass (2) is reached.
- ▶ Screw the locking screw into the oil filling hole (1), tightening torque *refer to page 427*.

Changing oil

- ✓ A suitable container is available for escaping oil.
- ▶ Unscrew the locking screw of the filling hole (1).
- ▶ Unscrew the drain plug (3) and drain the oil.
- ▶ Mount the drain plug (3), tightening torque*refer to page 427*.
- ▶ Top up new oil the via filling hole (1) up to the middle of the viewing glass (2).
- ▶ Screw in the locking screw of the filling hole (1) and tighten it firmly, Tightening torque *refer to page 427*.

30.7 Maintaining wheel hub gearbox

NOTICE

Damage to the wheel hub gearboxes caused by use of incorrect gearbox oil

When incorrect gearbox oil is used, the wheel hub gearboxes could be damaged during operation.

- ▶ Only use SHELL SPIRAX S4 CX 50 gearbox oil to refill or change the gearbox oil in the wheel hub gearboxes.
- ▶ If this gearbox oil is not available, contact your KRONE service partner.

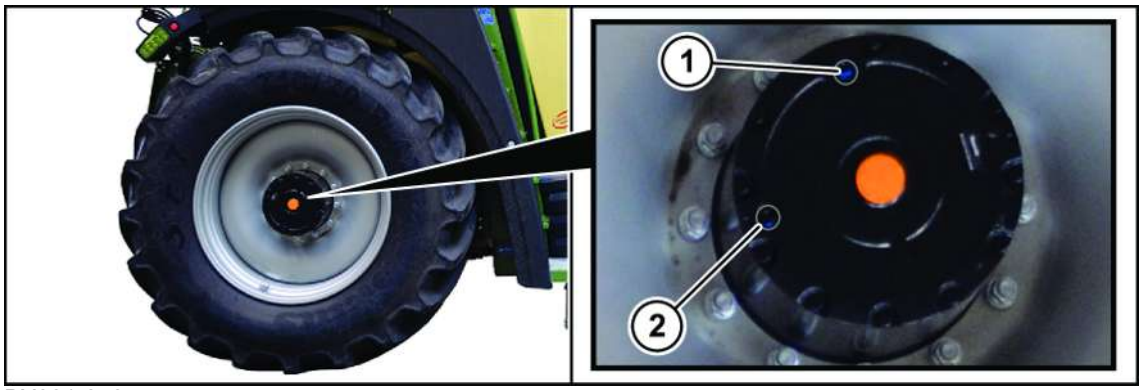

BX001-858

- ▶ Comply with the safety routine "Safe execution of oil level check, oil and filter element exchange", *refer to page 35*.

Checking oil level

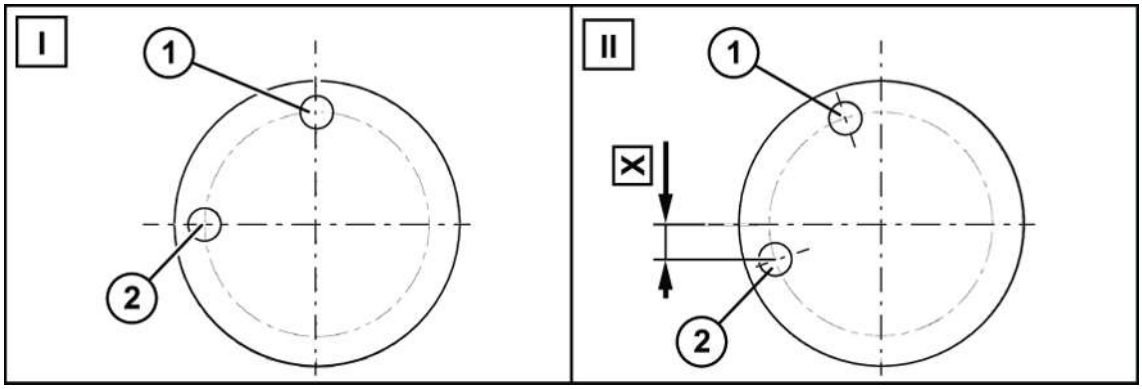

BX001-859

Check oil level on the front axle: Dimension X=40 mm.

Check oil level on the rear axle: Dimension X=30 mm.

✓ A suitable container is available for escaping oil.

▶ Position the wheel so that the filling hole (1) is in the top position (I).

▶ Thoroughly clean the area around the locking screw of the filling hole (1) and the locking screw of the inspection hole (2).

WARNING! Risk of scalding by hot gear oil escaping under pressure. Wear personal protective equipment such as gloves and safety glasses and carefully loosen the locking screw of the filling hole.

▶ To reduce the pressure, carefully remove the locking screw from the filling hole (1) from a lateral position.

⇨ The pressure in the wheel hub gearbox is reduced.

▶ Screw the locking screw into the filling hole (1).

▶ Position the wheel so that the centre of the locking screw of the inspection hole (2) is dimension X below the centre of the hub. To do this, position a spirit level horizontally in the centre of the hub and determine dimension X using a tape measure (II).

▶ Remove the locking screw from the inspection hole (2).

▶ Check whether the oil level reaches up to the inspection hole (2).

If the oil level reaches the inspection hole (2):

▶ Screw the locking screw into the inspection hole (2), tightening torque=60 Nm.

If the oil level does not reach the inspection hole (2):

▶ Remove the locking screw from the filling hole (1).

▶ Refill with fresh oil via the filling hole (1) until the oil level reaches the inspection hole (2).

▶ Screw the locking screw into the inspection hole (2) and the locking screw into the filling hole (1), tightening torque=60 Nm.

Change oil

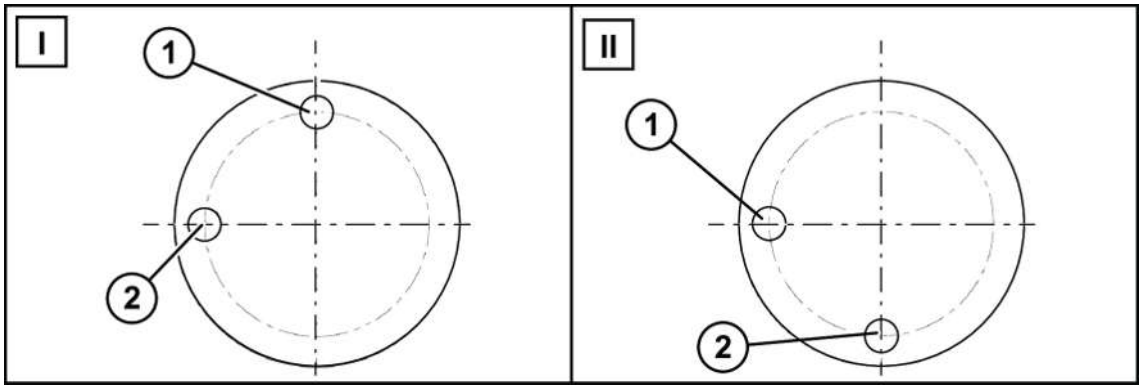

BX001-860

✓ A suitable container is available for escaping oil.

▶ Position the wheel so that the filling hole (1) is in the top position (I).

▶ Thoroughly clean the area around the screw plug of the filling hole (1) and the locking screw of the inspection hole (2).

WARNING! Risk of scalding by hot gear oil escaping under pressure. Wear personal protective equipment such as gloves and safety glasses and carefully loosen the locking screw of the filling hole.

▶ To reduce the pressure, carefully remove the locking screw from the filling hole (1) from a lateral position.

⇨ The pressure in the wheel hub gearbox is reduced.

▶ Screw the locking screw into the filling hole (1).

▶ Position the wheel so that the drain plug (2) is in the lowest position (II).

▶ Place a suitable container under the drain hole (2).

▶ Unscrew the locking screw of the filling hole (1), remove the drain plug (2) and drain the oil into the container.

▶ Position the wheel so that the centre of the locking screw of the inspection hole (2) is dimension X below the centre of the hub. To do this, position a spirit level horizontally in the centre of the hub and determine the dimension X using a measuring tape.

▶ Refill with fresh oil via the filling hole (1) until the oil level reaches the inspection hole (2).

▶ Screw the locking screw into the inspection hole (2) and the locking screw into the filling hole (1), tightening torque=60 Nm.

30.8 Maintaining spout rotary drive gearbox

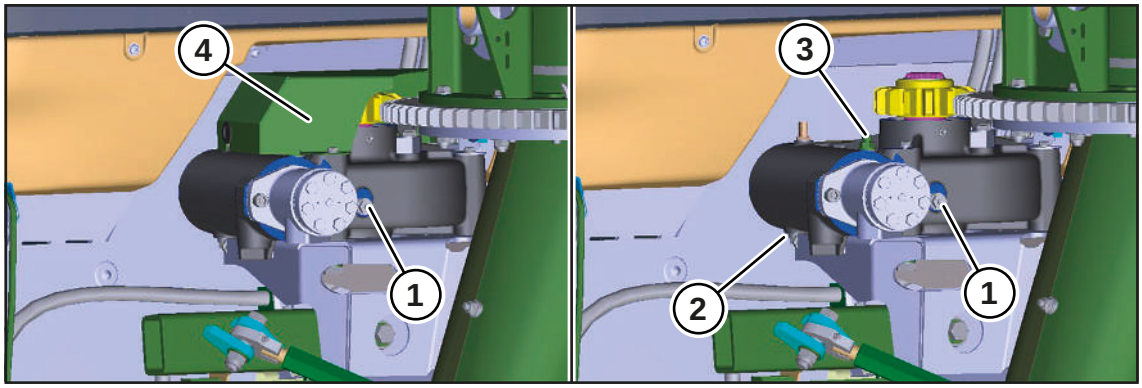

BX001-332

- Comply with the safety routine "Safe execution of oil level check, oil and filter element exchange", *refer to page 35*.

Checking oil level:

- Remove the locking screw from the inspection hole (1).
- Check whether the oil level reaches up to the inspection hole (1).

If the oil reaches the inspection hole:

- Screw the locking screw into the inspection hole (1), tightening torque *refer to page 427*.

If the oil does not reach the inspection hole:

- Dismount the ventilation filter (3).
- Top up new oil the via the filling hole (3) until the oil level has reached the inspection hole.
- Screw the locking screw into the inspection hole (1) and mount the ventilation filter (3), tightening torque *refer to page 427*.

Changing oil:

✓ A suitable container is available for escaping oil.

- Dismount the cover (4) and the ventilation filter (3).
- Provide a collecting vessel under the drain plug (2).
- Thoroughly clean the environment around the drain plug (2).
- Unscrew the drain plug (2) and drain the oil into the container.
- Mount the drain plug (2), tightening torque*refer to page 427*.
- Top up new oil via the filling hole (3) up to the inspection hole (2).
- Mount the ventilation filter (3), tightening torque*refer to page 427*.
- Mount the cover (4).

30.9 Maintaining fan gearbox

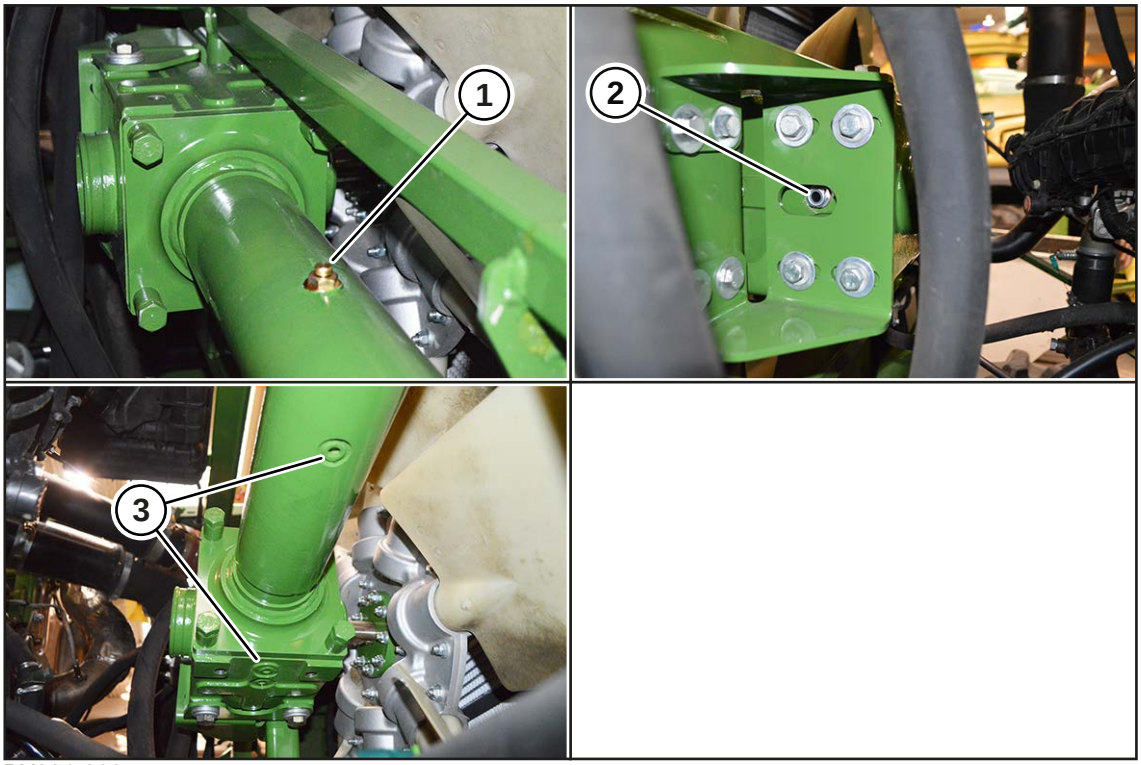

BX001-333

- Comply with the safety routine "Safe execution of oil level check, oil and filter element exchange", *refer to page 35*.

Checking oil level

- Start the diesel engine, switch on the main coupling, let both run approx. 1 min and then switch off the diesel engine.

The oil level must reach the middle of the viewing glass (2).

If the oil does not reach the middle of the viewing glass (2):

- Remove the locking screw from the oil filling hole (1).
- Top up oil via oil filling hole (1) until the middle of the viewing glass (2) is reached.
- Screw the locking screw into the oil filling hole (1), tightening torque *refer to page 427*.

Changing the oil

✓ A suitable container is available for escaping oil.

- Remove the locking screw from the oil filling hole (1).
- Unscrew the drain plugs (3) and drain the oil.
- Screw in the drain plugs (3), tightening torque *refer to page 427*.
- Refill with fresh oil via the oil filling hole (1) up to the middle of the inspection glass (2).
- Screw in the locking screw of the oil filling hole (1) and tighten it firmly, tightening torque *refer to page 427*.

30.10 Maintaining power take-off gear

NOTICE

An incorrect amount of oil will damage the power take-off gear

If the main frame of the precision forage harvester is not horizontal when checking the oil level and changing the oil, there is a risk that there will be too much or too little oil in the power take-off gear.

- Ensure that the main frame of the precision forage harvester is horizontal when checking the oil level and changing the oil.

The power take-off gear is located at rear left under the tailgate.

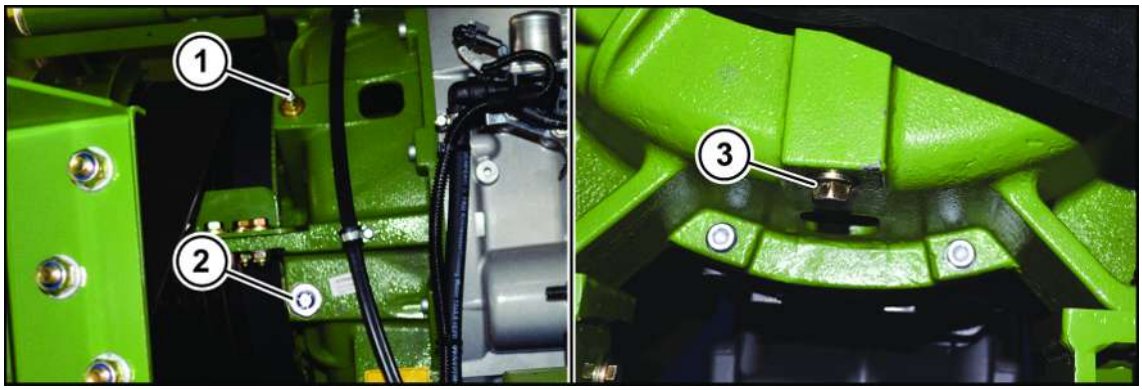

BX001-335

- Comply with the safety routine "Safe execution of oil level check, oil and filter element exchange", *refer to page 35*.

Checking oil level

- Start the diesel engine, switch on the main coupling, let both run approx. 1 min and then switch off the diesel engine.

The oil level must reach the middle of the viewing glass (2).

If the oil does not reach the middle of the viewing glass (2):

- Remove the locking screw from the oil filling hole (1).
- Top up oil via oil filling hole (1) until the middle of the viewing glass (2) is reached.
- Screw the locking screw into the oil filling hole (1), tightening torque *refer to page 427*.

Changing oil

- ✓ A suitable container is available for escaping oil.
- Unscrew the locking screw of the filling hole (1).
- Unscrew the drain plug (3) and drain the oil.
- Mount the drain plug (3), tightening torque*refer to page 427*.
- Top up new oil the via filling hole (1) up to the middle of the viewing glass (2).
- Screw in the locking screw of the filling hole (1) and tighten it firmly, Tightening torque *refer to page 427*.

30.11 Servicing VariLOC chop length gearbox

✓ The intake has been removed.

▶ Comply with the safety routine "Safe execution of oil level check, oil and filter element exchange", *refer to page 35*.

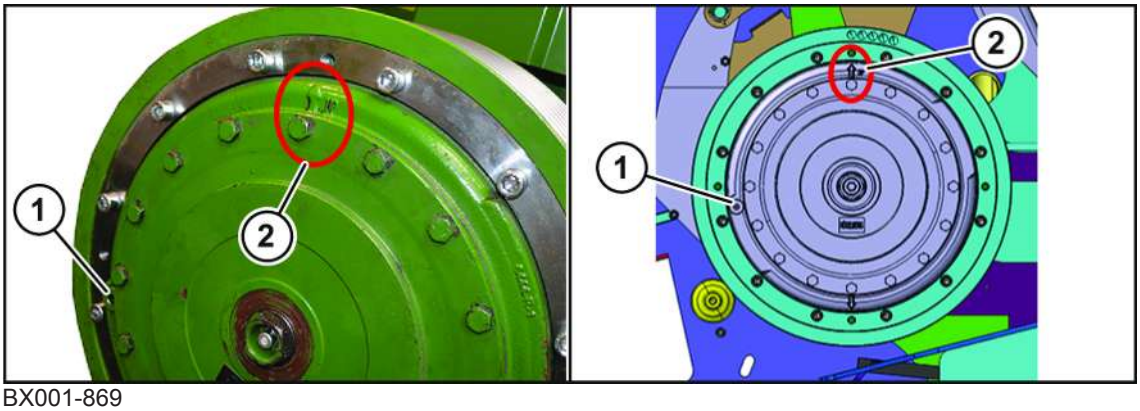

BX001-869

Checking oil level

✓ The machine is shut down and secured, *refer to page 34*.

✓ A suitable container is available for escaping oil.

▶ Turn the planetary gearbox so that the markings ⬆ and "UP" (2) are in the top position.

▶ Lock the cutter drum, *refer to page 495*.

▶ Thoroughly clean the area around the locking screw (1).

▶ Unscrew the locking screw (1).

▶ Check whether the oil level reaches up to the inspection hole (1).

If the oil reaches the inspection hole (1):

▶ Screw in the locking screw (1), *refer to page 424*.

If the oil does not reach the inspection hole (1):

▶ Refill with fresh oil up to the inspection hole (1) via the inspection hole (1).

▶ Screw in the locking screw (1).

▶ Unlock the chopping drum, *refer to page 495*.

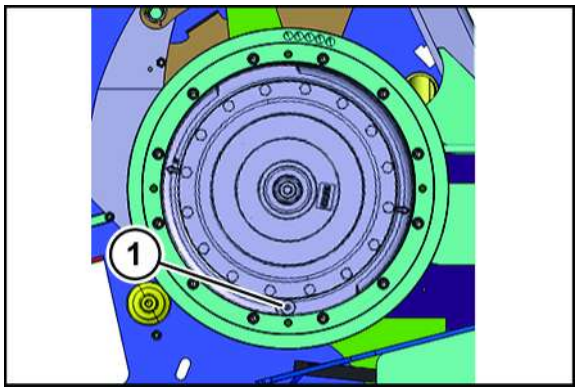

BX001-870

Changing oil

✓ The machine is shut down and secured, *refer to page 34*.

✓ A suitable container is available for escaping oil.

▶ Turn the pulley so that the locking screw (1) is in the lowest position.

▶ Lock the chopping drum.

▶ Thoroughly clean the area around the locking screw (1).

▶ Unscrew the locking screw (1) and drain the oil into the container.

▶ Loosen the locking of the chopping drum.

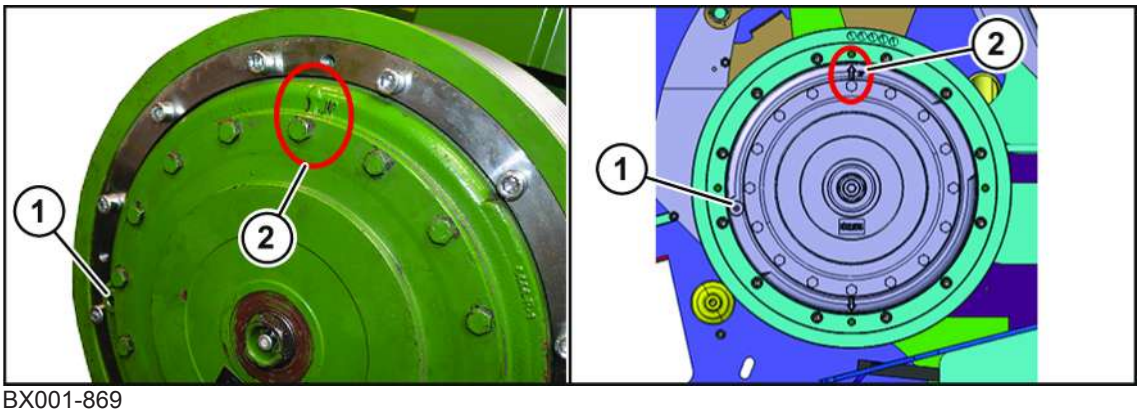

BX001-869

▶ Turn the planetary gearbox so that the markings ⬆ and “UP” (2) are in the top position.

▶ Lock the chopping drum.

NOTICE! Damage to the gearbox when using a mix a different oils. Make sure that different types of oil are not mixed when you top up the oil.

▶ Top up new oil via the inspection hole (1) until the inspection hole (1) is reached.

▶ Mount the locking screw (1).

▶ Loosen the locking of the chopping drum.

31 Maintenance – Electrics

⚠ WARNING

Risk of injury due to non-observance of relevant safety instructions

If the relevant safety instructions are not observed, persons may be seriously injured or killed.

- To avoid accidents, the relevant safety instructions must be read and observed, *refer to page 19*.

⚠ WARNING

Risk of injury due to non-observance of safety instructions

If the relevant safety routines are not observed, persons may be seriously injured or killed.

- The safety routines must be read and observed to avoid accidents, *refer to page 34*.

⚠ WARNING

Risk of injury due to exploding battery gas

If the booster cables are not connected properly, an explosion may occur. As a result, people may be seriously injured or killed or the electrical system could be damaged.

- Jump start the diesel engine with 24 volts only.
- First connect positive cable to positive pole of the external voltage source, then connect it to the positive pole of the left battery (C2) on machine side.
- Then connect negative cable to negative pole of external voltage source and then to negative pole of right battery (C1) on machine side.

⚠ WARNING

Danger to life due to exploding battery gas

Highly explosive battery gas may escape from the battery

- Keep ignition sources and naked flames away from the battery.
- Note the correct polarity when disconnecting and connecting the battery.

NOTICE

Damage to the electrical system due to incorrect polarity of the battery

Non-observance of the correct polarity between the battery and alternator may severely damage the electrical system.

- First connect the positive pole of the battery.
- Then connect the negative terminal of the battery.

NOTICE

Damage to electronic parts caused by voltage peaks

If the supply voltage is interrupted while the machine is running, voltage peaks could result. As a result, electronic components could be damaged.

- Switch off diesel engine.
- Switch off main battery switch.

INFORMATION

An overview of all control units, circuit boards and fuses can be found in the circuit diagram, which is part of the other applicable documents that was delivered with the machine.

31.1 Batteries

WARNING

Risk of injury due to a short circuit of the battery poles

When working on the batteries, carelessness may result in a short circuit of the battery poles. A high current flows that may result in an electric shock, burns or explosion of the batteries. As a result, people may be seriously injured.

- When working on the batteries, make sure the positive pole does not come into contact with the negative pole or the frame.
- Guard the battery poles with insulating caps against contact.

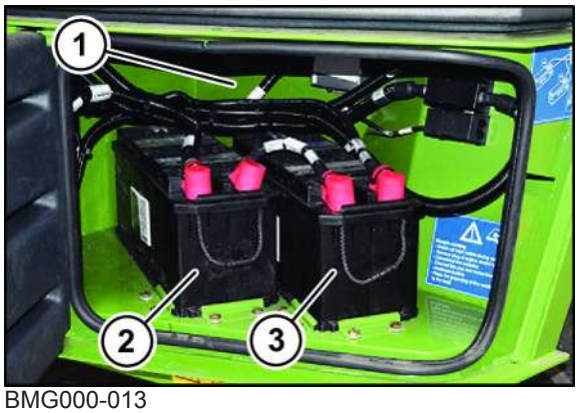

BMG000-013

1	Battery compartment	3	Battery (12 V)
2	Battery (12 V)		

The batteries (2) and (3) are in the battery compartment (1) behind the machine on the right.

Main battery switch

NOTICE

Damage to dosing unit in the mixing tube caused by overheating

The dosing unit may be damaged if it is not cooled after the engine is switched off. In order to guarantee sufficient cooling, wait for at least 5 minutes after the engine has been switched off before the main battery switch can be switched to “0” position.
To ensure that the dosing unit is cooled, respect the following procedure:

- Turn ignition key to “STOP” position.
- Wait for at least 5 minutes.
- Set the main battery switch to “0” position.

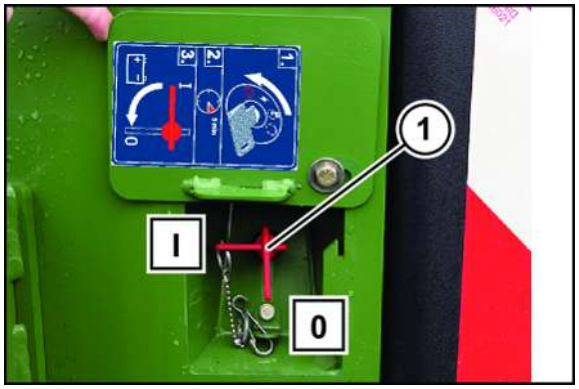

BXG000-038

The main battery switch (1) is used to close or interrupt the circuit for supplying the machine.

The main battery switch is located on the right rear side as seen in the direction of travel.

Switch position "I": The circuit is closed

Switch position "0": The circuit is interrupted

31.1.1 Cleaning and maintaining batteries

- To keep the battery surface clean and dry, clean the batteries with a damp or anti-static cloth only.
- Protect the battery terminals and connecting terminals from corrosion by applying terminal grease to the battery terminals and connecting terminals.
- Use a brush to remove any oxidation from the pole terminal.
- When batteries are removed and placed in storage, regularly check the charge state or use a charge maintenance device. If the open-circuit voltage is below 12.3 V, recharge the battery.
- Keep removed batteries cool, dry and charged.

31.1.2 Charging batteries

BMG000-015

The voltage of the machine wiring system is 24 V. Two 12-V batteries are connected in series to supply the vehicle electronics with 24 V.

To charge and maintain the charge, the batteries must be connected to a battery charger.

The voltage of the battery charger must correspond to the voltage of the wiring system (24 V). The vehicle electronics will be damaged if a battery charger with a higher or lower voltage is used.

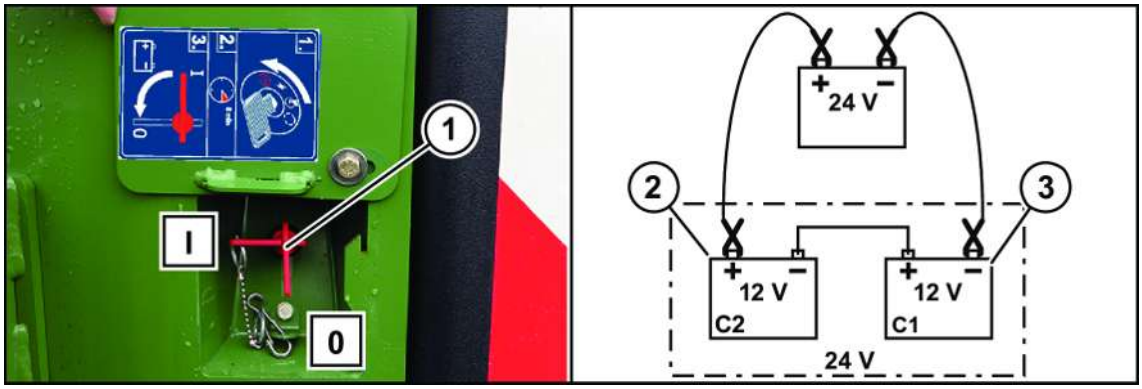

BXG000-070

✓ The machine is shut down and secured, *refer to page 529*.

▶ Open the battery compartment.

▶ Remove the insulating caps by loosening the cable ties.

▶ Connect the positive cable of the battery charger to the positive terminal on the left battery (C2) (2) on the machine side.

▶ Connect the negative cable of the battery charger to the negative terminal on the right battery (C1) (3) on the machine side.

▶ Switch on the battery charger

▶ When the batteries are charged, switch off the battery charger.

▶ First disconnect the negative cable from the negative terminal on the right battery (C1) (3).

▶ Then disconnect the positive cable from the positive terminal on the left battery (C2) (2).

▶ Attach the insulating caps and fix with cable ties.

▶ Close the battery compartment.

31.1.3 Replacing batteries

Disconnecting the batteries

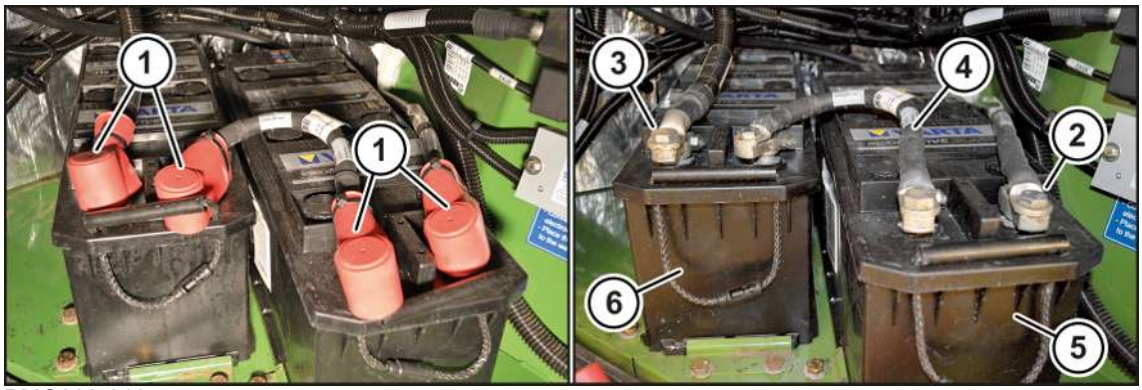

BMG000-016

✓ The machine is shut down and secured, *refer to page 34*.

✓ The battery compartment is open.

▶ Remove the insulating caps (1) by loosening the cable ties.

▶ Dismount the pole terminal (XC1/-) of the negative cable (2) from the negative pole of battery C1 (5).

▶ Dismount the pole terminal (XC2/+.1) of the positive cable (3) from the positive pole of battery C2 (6).

▶ Dismount the pole terminal (XC2/-) of the cable (4) from the negative pole of battery C2 (6).

▶ Dismount the pole terminal (XC1/+) of the cable (4) from the positive pole of battery C1 (5).

Removing the batteries

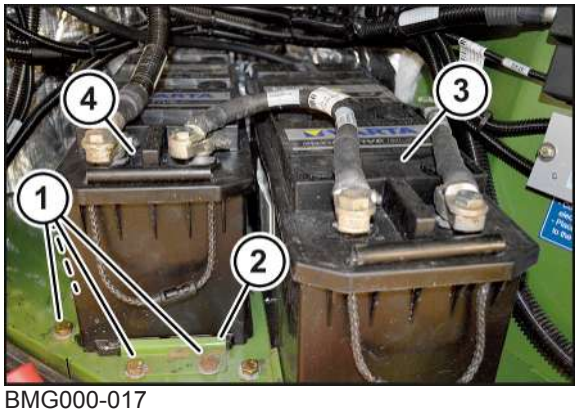

BMG000-017

Each battery weighs approx. 37 kg.

✓ The batteries are disconnected, *refer to page 546*.

▶ Remove the screws (1) and set the retaining sheet (2) down to the side.

▶ Remove battery C1 (3) and battery C2 (4) from the battery compartment.

Installing the batteries

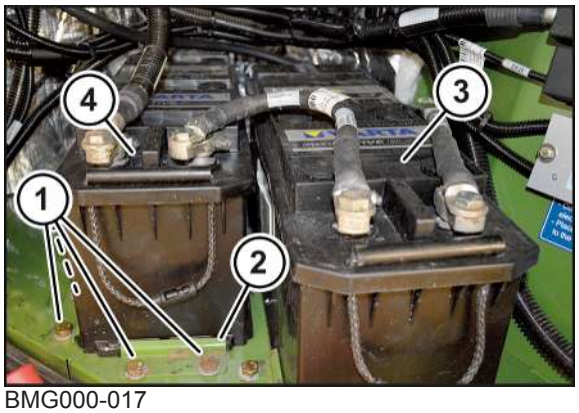

BMG000-017

▶ Insert battery C1 (3) and battery C2 (4) in the battery compartment.

▶ Insert the retaining plates (2) and mount the screws (1).

▶ Connect the batteries, *refer to page 548*.

Connecting a battery

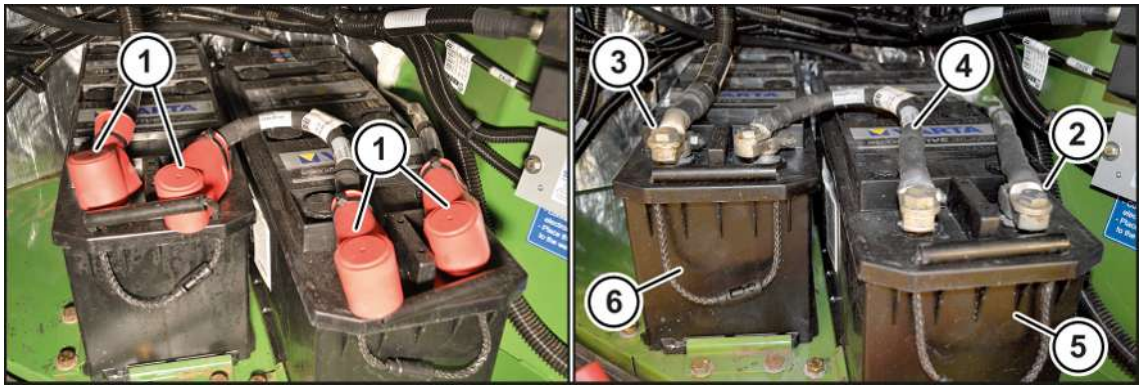

BMG000-016

- Mount the pole terminal (XC1/+) of the cable (4) on the positive pole of battery C1 (5) (tightening torque = 6 ±1 Nm).
- Mount the pole terminal (XC2/-) of the cable (4) on the negative pole of battery C2 (6) (tightening torque = 6 ±1 Nm).
- Mount the pole terminal (XC2/+.1) of the positive cable (3) on the positive pole of battery C2 (6) (tightening torque = 6 ±1 Nm).
- Mount the pole terminal (XC1/-) of the negative cable (2) on the negative pole of battery C1 (5) (tightening torque = 6 ±1 Nm).
- Attach the insulating caps (1) and fix with cable ties.
- Close the battery compartment.

31.2 Maintaining alternator

NOTICE

Machine damage due to improper handling

When installing/removing the batteries, an improper procedure may cause a short circuit. As a result, electronic components could be damaged.

- Interrupt the electrical power circuit via main battery switch and secure to prevent it from being switched on again.

BXG000-065

Checking/tensioning/replacing V-belt of the alternator

For the procedure see the supplied maintenance booklet, MTU Friedrichshafen.

If the alternator (1) fails or is not working satisfactorily

- Determine the possible cause of the error.
- Attempt to eliminate the possible cause according to the following list.

Fault: The charging warning light lights up.
Error messages under/overvoltage on the terminal.

Possible cause	Remedy
The output voltage of the alternator is too low.	▶ Have the alternator checked by a qualified service centre.
The connection cable to the alternator is loose.	▶ Tighten the cable connections to the appropriate tightening torque (see maintenance booklet, MTU Friedrichshafen).
The cable connections are corroded.	▶ Clean the cable connections on the alternator and battery.
Fuse F29 for the excitation voltage of the alternator is defective.	▶ Replace fuse F29.

If the damage cannot be repaired based on the suggestions, contact your KRONE dealer.

31.3 Maintaining starter

NOTICE

Machine damage due to improper handling

When installing/removing the batteries, an improper procedure may cause a short circuit. As a result, electronic components could be damaged.

- Interrupt the electrical power circuit via main battery switch and secure to prevent it from being switched on again.

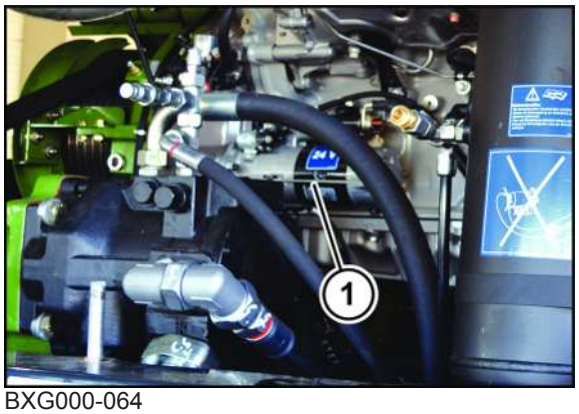

BXG000-064

If the starter (1) fails or is not working satisfactorily

- Determine the possible cause of the error.
- Attempt to eliminate the possible cause according to the following list.

Fault: The starter fails or does is not working satisfactorily.

Possible cause	Remedy
The connection cable to the starter is loose.	▶ Tighten the cable connections to the appropriate tightening torque (see maintenance booklet MTU).
The cable connections are corroded.	▶ Clean the cable connections on the starter and engine.
The magnetic switch of the starter is defective	▶ Have the starter checked by a qualified service centre.

If the damage cannot be repaired based on the suggestions, contact your KRONE dealer.

32 Maintenance - Lubrication

⚠ WARNING

Risk of injury due to non-observance of relevant safety instructions

If the relevant safety instructions are not observed, persons may be seriously injured or killed.

- To avoid accidents, the relevant safety instructions must be read and observed, *refer to page 19*.

⚠ WARNING

Risk of injury due to non-observance of safety instructions

If the relevant safety routines are not observed, persons may be seriously injured or killed.

- The safety routines must be read and observed to avoid accidents, *refer to page 34*.

NOTICE

Environmental damage caused by consumables

If consumables are not stored and disposed of properly, they may escape into the environment. As a result, the environment will be damaged, even by small quantities.

- Store the consumables in suitable containers according to the statutory provisions.
- Dispose of used consumables according to statutory provisions.

NOTICE

Damage to bearing points

When using lubricating greases not approved and when mixing different lubricating greases, the lubricated parts may be damaged.

- Only use approved lubricating greases, *refer to page 69*.
- Do not use graphite-containing lubricating greases.
- Do not mix different lubricating greases.

32.1 Lubricating universal shafts

BX001-343

1	Universal shaft drive intake	3	Universal shaft header
2	Universal shaft upper roller gearbox	4	Double joint

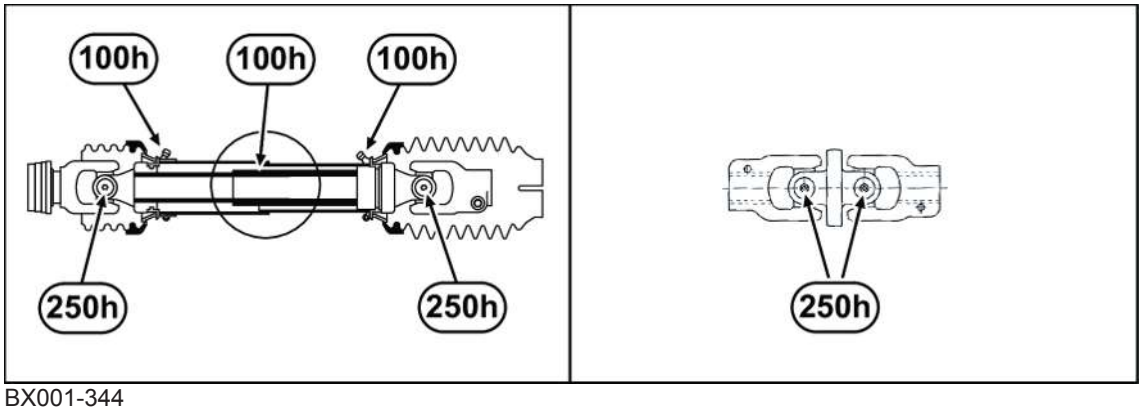

BX001-344

- Follow the operating instructions of the universal shaft manufacturer.
- Lubricate the universal shafts and the double joint at the intervals indicated in the drawings using a multi-purpose grease.

32.2 Lubrication chart - machine

The information on maintenance intervals is based on average load of the machine. In case of an increased load and under extreme working conditions, the time periods must be reduced. The types of lubrication are marked by means of icons in the lubrication chart, refer to table.

Type of lubrication	Lubricant	Comment
Grease 	Multi-purpose grease	▶ Apply two strokes of lubricating grease from the grease gun per grease nipple. ▶ Remove excess lubricating grease at the grease nipple.

Machine and cutting drum

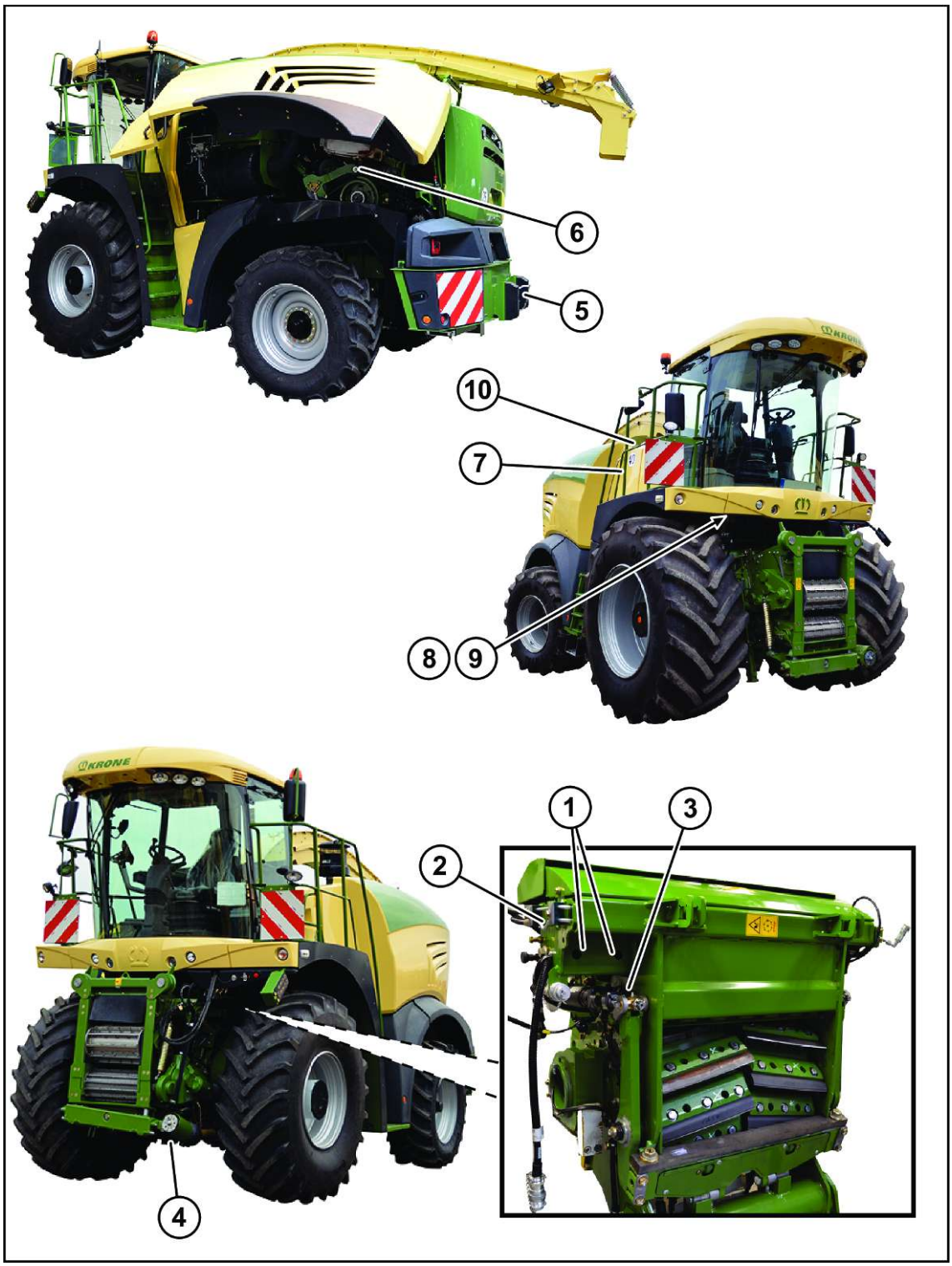

BXG000-066

Every 100 operating hours		
1) 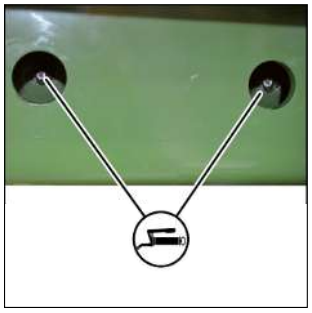	2) 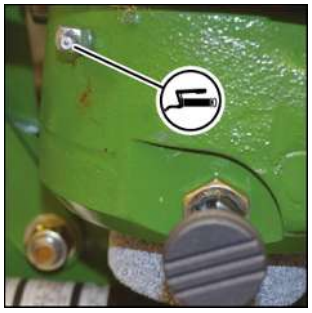	4) 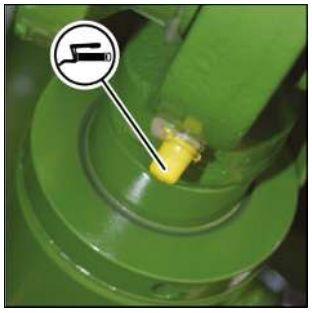
5) 	6) 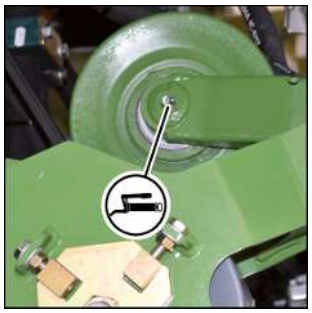	7) 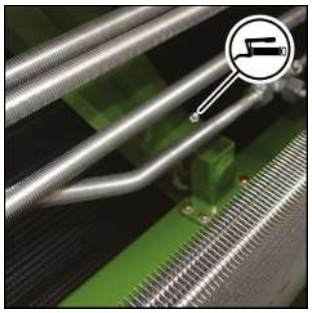
8) 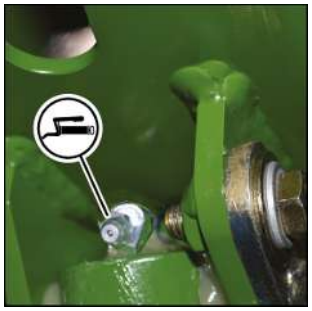	9) 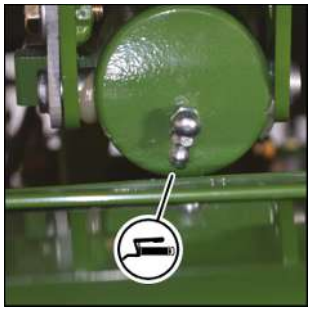	10) 

After cleaning with water		
3) 		

Corn conditioner

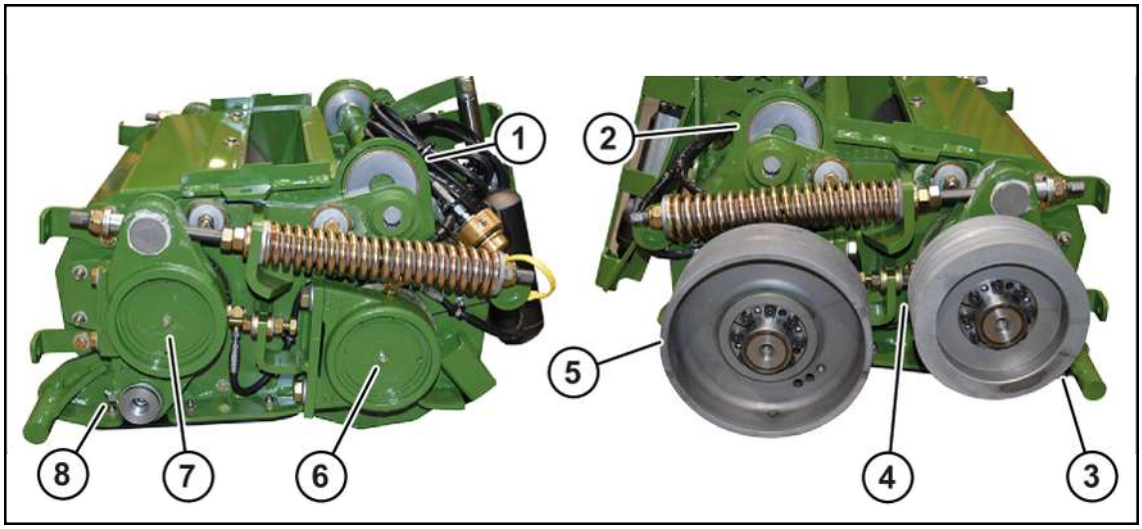

BX001-356

Every 100 operating hours		
1) 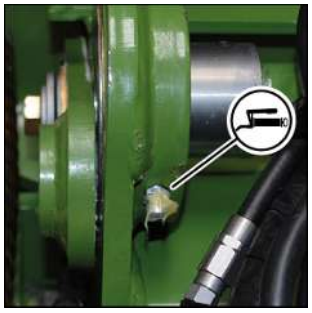	2) 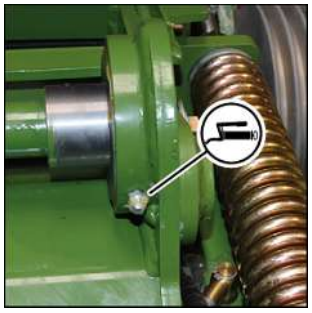	3) 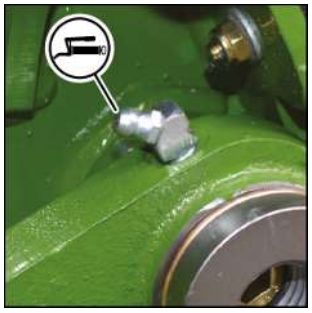
8) 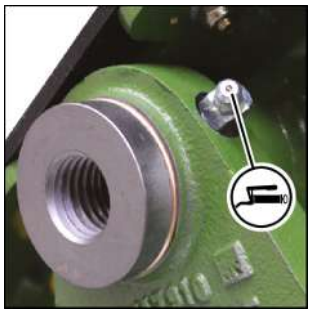		

After cleaning with water		
4) 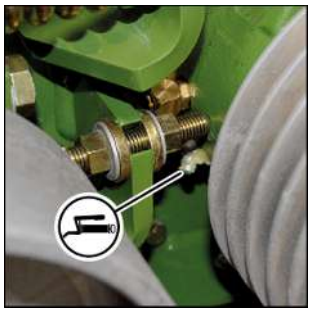	5) 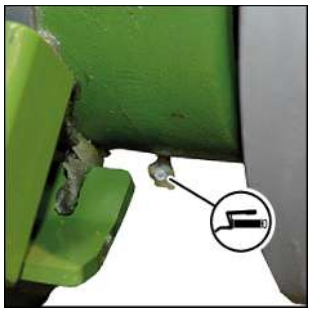	6) 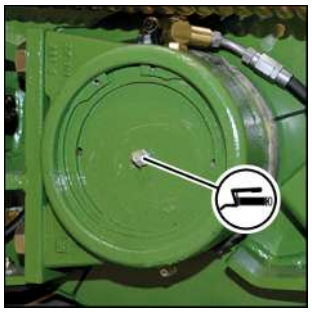
7) 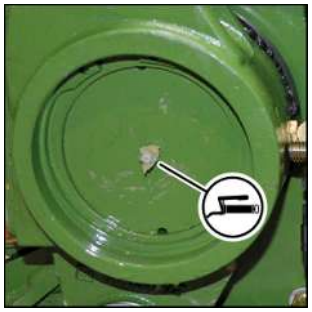		

Intake

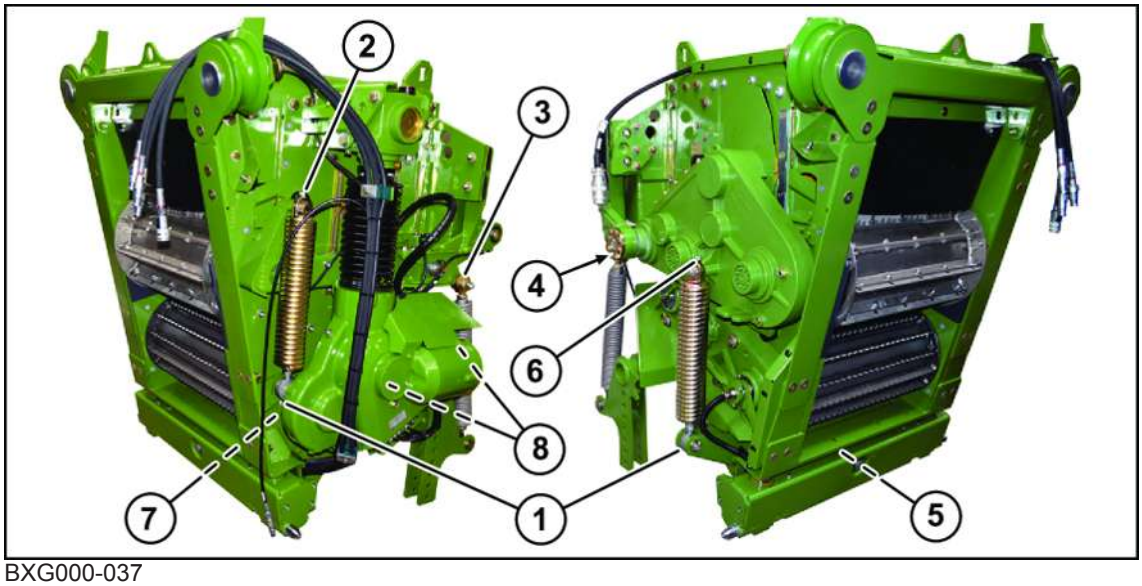

BXG000-037

Every 100 operating hours		
1) 	2) 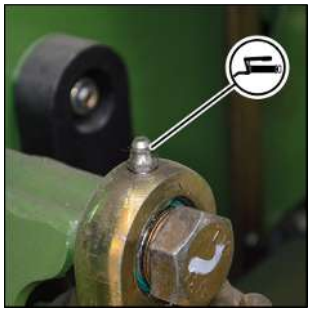	3) 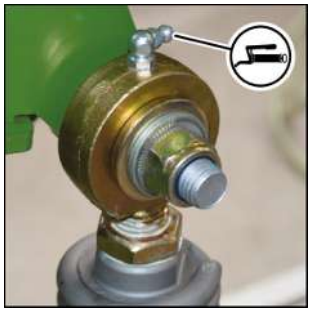
4) 	5) 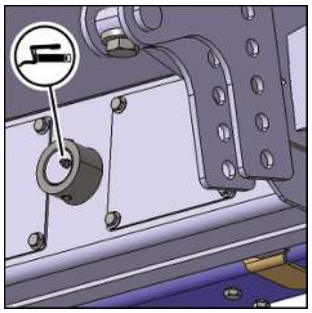	6) 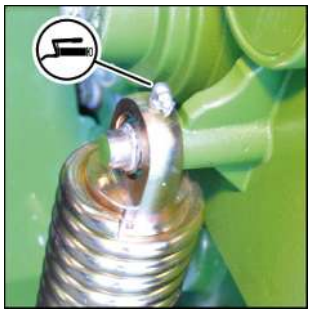
7) 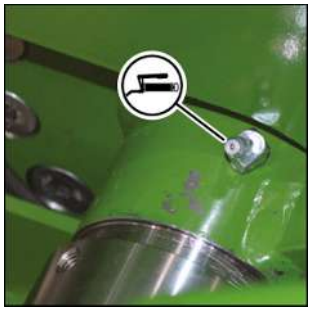	8) 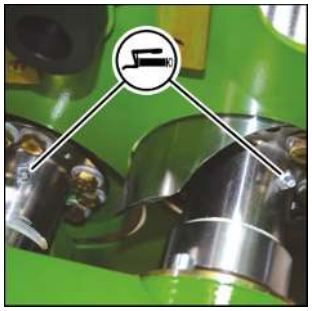	

33 Maintenance – Central Lubrication System

⚠ *WARNING*

Risk of injury due to non-observance of relevant safety instructions

If the relevant safety instructions are not observed, persons may be seriously injured or killed.

- To avoid accidents, the relevant safety instructions must be read and observed, *refer to page 19*.

⚠ *WARNING*

Risk of injury due to non-observance of safety instructions

If the relevant safety routines are not observed, persons may be seriously injured or killed.

- The safety routines must be read and observed to avoid accidents, *refer to page 34*.

NOTICE

Damage to the machine due to the use of incorrect and contaminated lubricants

Unauthorised or contaminated lubricants in the central lubrication system will cause faults in the central lubrication system and damage the bearing positions.

- When working on the central lubrication system, use clean and suitable tools.
- Use authorised lubricants only.
- Ensure that dirt or dirty lubricant cannot get into the central lubrication system.

33.1 Overview of the Distributor Blocks of the Central Lubrication System

INFORMATION

The distributor blocks have one grease nipple each (red cap) for lubrication with a grease gun if required.

The lubrication point can be identified by the numbers on the lubrication lines to the distributor blocks.

BX001-374

Distributor block	Lubrication point	
1) Main distributor 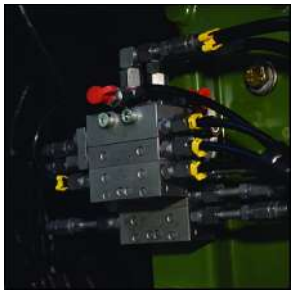	1	Discharge accelerator bearing on right
	2	Discharge accelerator bearing on left
	3	Channel support slewing ring at front
	8	Channel support slewing ring at front
2) Drives 	4	Bearing spout on right
	5	Flange-mounted bearing header
	6	Flange-mounted bearing intake
	7	Tensioning arm main belt
	9	Bearing spout on left
	12	Tension roll main belt

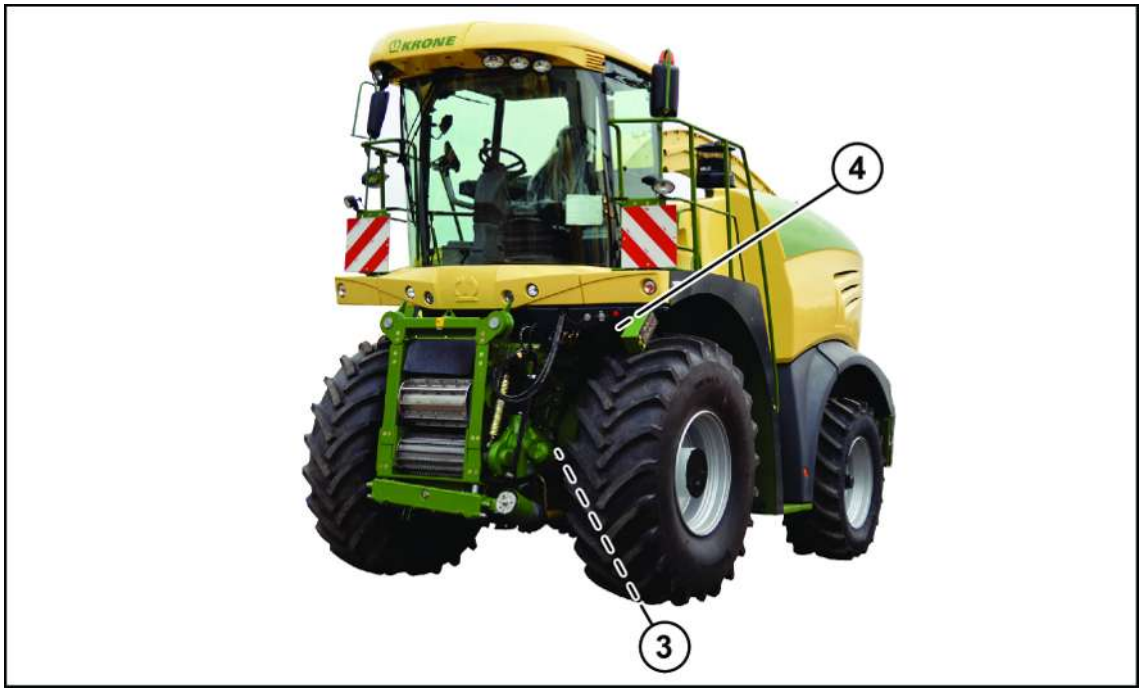

BX001-367

Distributor block	Lubrication point	
3) Chopper unit 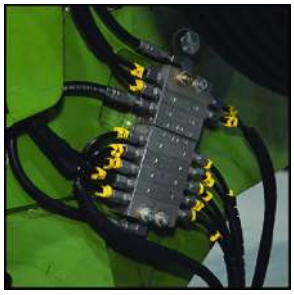	21	Drum bearing on right
	22	Bushing frame bearing on right
	23	Spindle counterblade adjustment on right
	24	Axial bearing on right at rear
	25	Axial bearing on right at front
	26	Drum base on left
	27	Tension anchor on left
	28	Drum bearing on left
	29	Bushing frame bearing on left
	30	Spindle counterblade adjustment on left
	31	Axial bearing at front on left
	32	Axial bearing at rear on left
	33	Drum base on right
	34	Tension anchor on right
4) Corn conditioner 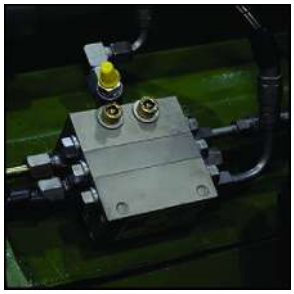	52	Bearing corn conditioner at rear on left
	53	Bearing corn conditioner at front on left
	54	Bearing corn conditioner at rear on right
	55	Bearing corn conditioner at front on right

BX001-380

Distributor block	Lubrication point	
5) Intake 	35	Lower roller at rear on left
	36	Lower roller in middle on left
	37	Lower roller at front on left
	38	Roller at rear on right
	39	Roller in middle on right
	40	Roller at front on right
	41	Roll on right
	42	Rocker arm on right
	43	Rocker arm on left at front
	44	Rocker arm on left at rear
	45	Upper roller on left at rear
	46	Upper roller on left in middle
	47	Upper roller on left at front
	48	Roll on left
	49	Upper roller on right at rear
	50	Upper roller on right in middle
	51	Upper roller on right at front

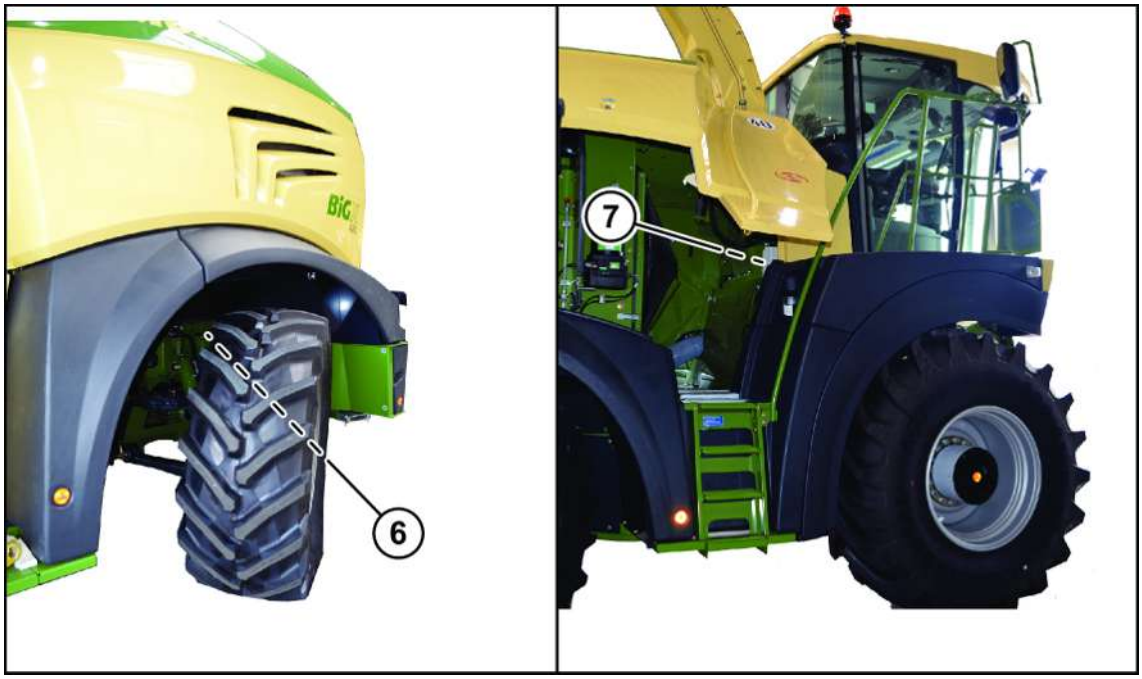

BX001-382

Distributor block	Lubrication point	
6) Rear axle 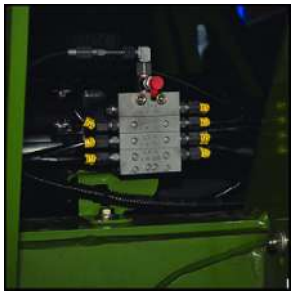	14	Bushing tensioning arm fan drive
	15	Tension roll main belt at rear
	16	Upper steering knuckle on right
	17	Lower steering knuckle on right
	18	Bushing tensioning arm main belt at rear
	19	Upper steering knuckle on left
	20	Lower steering knuckle on left
7) Sub-distributor corn conditioner 	10	Deflection roll drive corn conditioner
	11	Bearing tensioning arm corn conditioner
	13	Tension roll corn conditioner

33.2 Lubricants

To ensure problem-free operation of the central lubrication system, we recommend using the following greases which we have tested. Sodium soap greases must not be used in the on-road or off-road area because of their solubility in water. Grease can be changed from conventional grease to bio-degradable greases (and vice-versa) for the products listed here without resulting disadvantage.

Standard commercial greases or greases recommended by the vehicle or grease manufacturer are used as lubricants. Greases should still exhibit adequate suction and flow performance at –25 °C (max. flow pressure 700 mbar). They must not have a tendency to bleed out, as this may result in depositions in the lines during extended operation.

MoS2 greases (up to 5% molybdenum disulphide) can be conveyed with progressive pumps and distributor blocks.

Lubricant types NLGI class 2

Manufacturer	Type designation	Saponification	Minimum conveying temperature
AGIP	Autol Top 2000	Spec. Ca	–10 °C
ARAL	Long-term grease H	Li	–25 °C
BECHEM	High–Lub L4742	Li	–20 °C
BP	Energrease LS EP 9346	Li	–25 °C
	Energrease LS-EP2	Li	–20 °C
CASTROL	Spheerol EP L2	Li	–20 °C
ESSO	Exxon multi-purpose grease	Li	–20 °C
ELF	ELF Multi 2	Li	–20 °C
FINA	EP multi-purpose grease	Li	–20 °C
FUCHS	LZR 2	Li	–25 °C
KROON OIL	Lithep Grease	Li	–10 °C
MOBIL	Mobilux EP 2	Li	–15 °C
Mobilgrease	MB 2	Li	–20 °C
MOGUL	LV 1 EP	Li	–25 °C
ÖMV	ÖMV Signum M283	Li/Ca	–25 °C
OPTIMOL	Olit EP 2	Li	–25 °C
SHELL	Retinax EP L2	Li	–20 °C
TEXACO	Multifak EP2	Li	–15 °C
TOTAL	Multis EP2	Li	–20 °C
Zeller & Gmelin	Divinol multi-purpose grease 2	Li	–20 °C

Lubricating greases with fast bio-degradable times

Manufacturer	Type designation	Saponification	Minimum conveying temperature
ARAL	BAB EP 2	Li/Ca	-20 °C
AVIA	Syntogrease	Li	-25 °C
BECHEM	UWS VE 42	Li/Ca	-25 °C
DEA	Dolon E EP2	Li/Ca	-20 °C
FINA	Biolical EP S2	Li/Ca	-25 °C
FUCHS	Plantogel 0120S	Li	-25 °C
LUBRITECH	Stabyl Eco EP2	Li/Ca	-20 °C

Manufacturer	Type designation	Saponifica-tion	Minimum conveying temperature
ÖMV	ÖMV ecodur EP2	Ca	-25 °C
TEXACO	Starfak 2	Ca	-20 °C
Zeller & Gmelin	Divinol E2	Li	-25 °C

33.3 Filling the lubricant tank

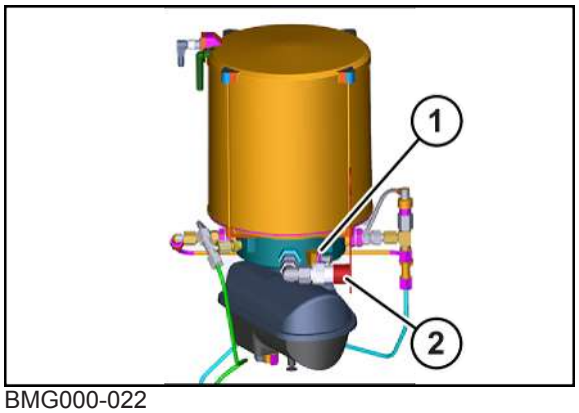

BMG000-022

The lubricant tank can be filled via the conical grease nipple (1) or via the connector (2).

There are two different ways to top up the container by means of a standard grease gun:

- directly via conical grease nipple (1)
- via filler neck screwed in instead of conical grease nipple

Topping up lubricant tank via a filler neck

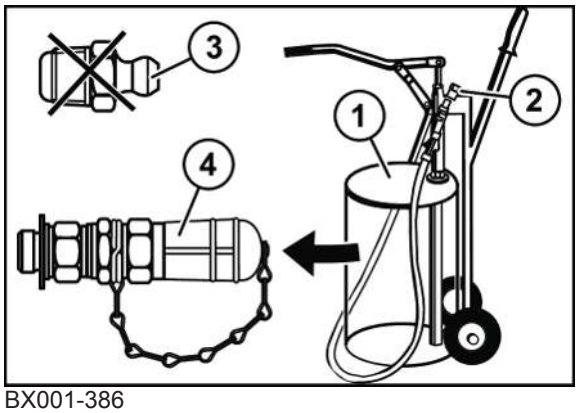

BX001-386

✓ The machine is shut down and safeguarded, *refer to page 34*.

▶ Dismount the conical grease nipple (3) on the lubricant tank and mount the filler neck 27 001 594 * (4).

▶ Mount the coupling sleeve 27 001 595 * (2) on the filling pump (1).

Topping up lubricant tank using a filling cylinder

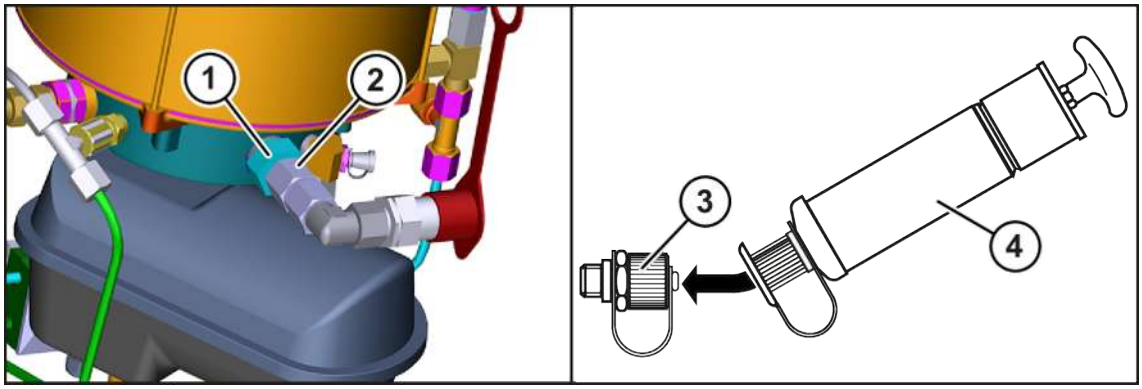

BMG000-023

- Dismount the double nipple (1) on the reducer (2).
- Mount the connecting piece 27 001 998 * (3) with seal ring.
- To fill, remove the protective caps on the connecting piece (3) and on the filling cylinder 940 393 * (4).

33.4 Check filling level

NOTICE
Damage to the machine due to lack of lubrication If the machine is not adequately lubricated, the affected components will be damaged. ▶ Ensure that the lubricant tank of central lubrication system is always adequately full.

- Visually check the filling level by the transparent lubricant tank.

The following error message appears in the terminal when the lubricant tank is empty:

- “Lubrication tank of central lubrication” empty

To ensure that the machine can be lubricated sufficiently again:

- Stop the machine and refill the lubricant tank.

33.5 Starting intermediate lubrication

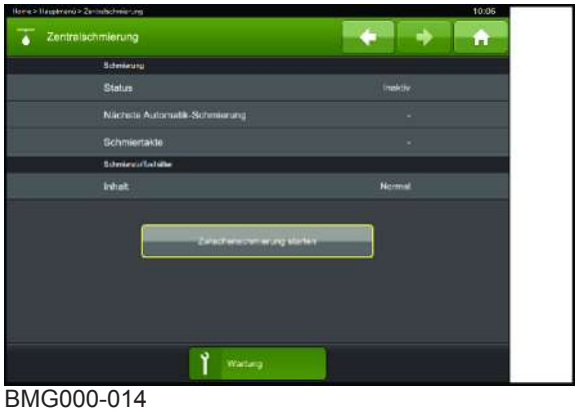

BMG000-014

The lubrication interval is preset ex works. The factory setting is 600 s for the interval duration and 18 for the number of clock cycles per lubrication interval (corresponds to a grease quantity of 20 ml).

To start intermediate lubrication manually:

- Open the “Central Lubrication” → “Maintenance” menu on the terminal and press the “Start intermediate lubrication” key.

The central lubrication system performs intermediate lubrication.

33.6 Searching for the error in the central lubrication system

Jam in the system or at a connected lubrication point

- Unscrew the outlet screw connections from the main distributor to the subdistributor one after the other. If lubricant suddenly exits under pressure when one of the outlet screw connections is loosened, the connected subdistributor is blocked. If lubricant does not exit from any of the outlet screw connections, the main distributor is blocked. Clean or replace the main distributor.
- Reinstall the outlet screw connections.
- Loosen the outlet screw connections on the blocked subdistributor. If lubricant suddenly exits under pressure when unscrewing one of the outlet screw connections, the connected lubrication point is blocked. If lubricant does not exit from any of the outlet screw connections, the subdistributor is blocked. Clean or replace the blocked subdistributor.
- Remove the blockage at the lubrication point.

34 Malfunction, cause and remedy

⚠ WARNING

Risk of injury due to non-observance of relevant safety notices

If the relevant safety notices are not observed, persons may get seriously injured or killed.

- ▶ To avoid accidents, the basic safety instructions must be read and observed, *refer to page 19*.

⚠ WARNING

Risk of injury due to non-observance of safety instructions

If the relevant safety routines are not observed, persons may be seriously injured or killed.

- ▶ The safety routines must be read and observed to avoid accidents, *refer to page 34*.

34.1 Electrics/electronics BiG X defective

INFORMATION

An overview of all control units, circuit boards and fuses can be found in the circuit diagram, which is part of the other applicable documents that was delivered with the machine.

If any error messages occur, follow the instructions on the terminal. If the error cannot be alleviated, contact your distributor.

You will find basic information and overviews about the electrical/electronic components on the following pages.

Components may only be repaired or replaced by a qualified service centre. Contact your distributor.

- Explanations about cable breaks and short circuits, *refer to page 569*.
- Overview of fuses, *refer to page 571*.
- Overview of the control units, *refer to page 575*.
- Overview of the sensors, *refer to page 577*.
- Overview of the actuators, *refer to page 581*.

34.1.1 Cable break, short circuit

Short circuit to ground

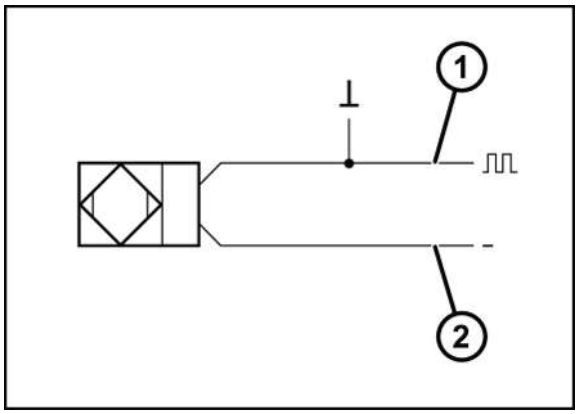

BX001-689

1	Signal line	2	Ground line

If the signal voltage is under the specified value, a short circuit to ground has occured.

Possible cause: The cable is damaged and has made contact with the vehicle body.

Cable break

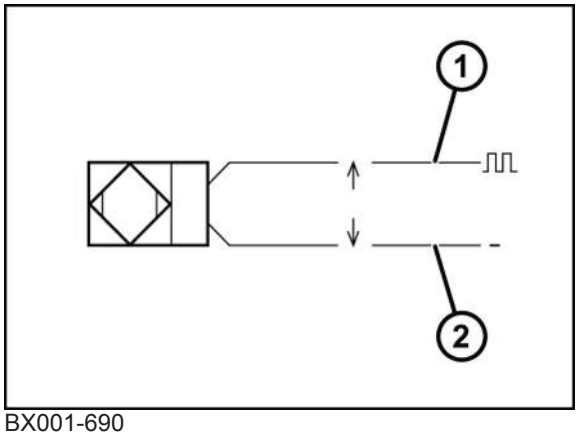

BX001-690

1	Signal line	2	Ground line

If the input signal has not been recorded, there is a broken cable.

Possible cause: The cable is not connected or it is damaged or severed (torn off).

Short circuit

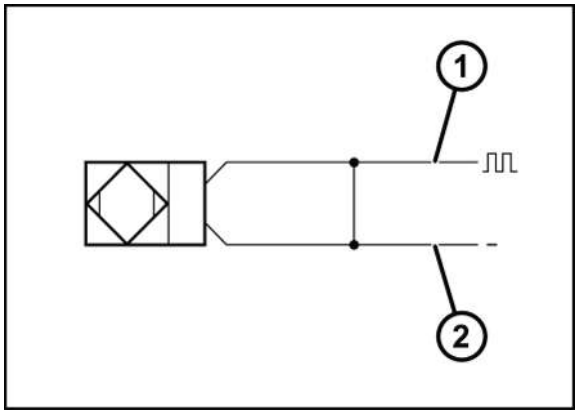

BX001-691

1	Signal line	2	Ground line

There is a connection between the supply voltage (plus and minus) or the signal voltage and ground. A short circuit is present.

Possible cause: The cable is damaged and the supply lines to the sensors are connected to each other.

Short circuit to supply voltage

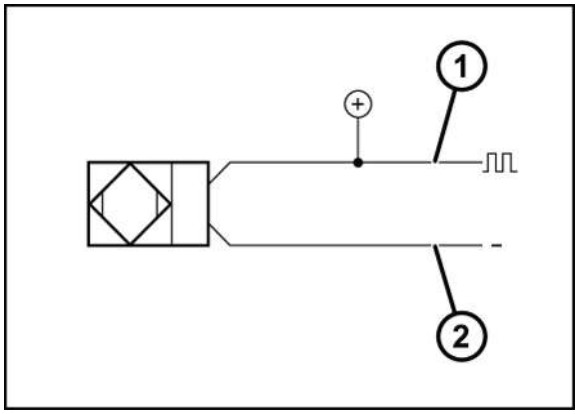

BX001-692

1	Signal line	2	Ground line

If the voltage on the signal line is above the value range that is valid for the sensor, there is a connection to the other live line.

Possible cause: A supply line is connected to the sensor signal line.

34.1.2 Overview fuses

The fuses of “Distributor power supply with fuses” are located on right-hand machine side in the bumper, in the battery compartment.

BX001-706

ED	Designation	ED	Designation
F1	Distributor supply with fuses	F1.F4	Power supply cabin electronics
F1.F2	Batteries	F1.F5	Reserve
F1.F3	Power supply cabin power		

The "central electrical system" circuit board is located in the console in the cabin, *refer to page 575*.

The values for the fuses are on the circuit diagram.

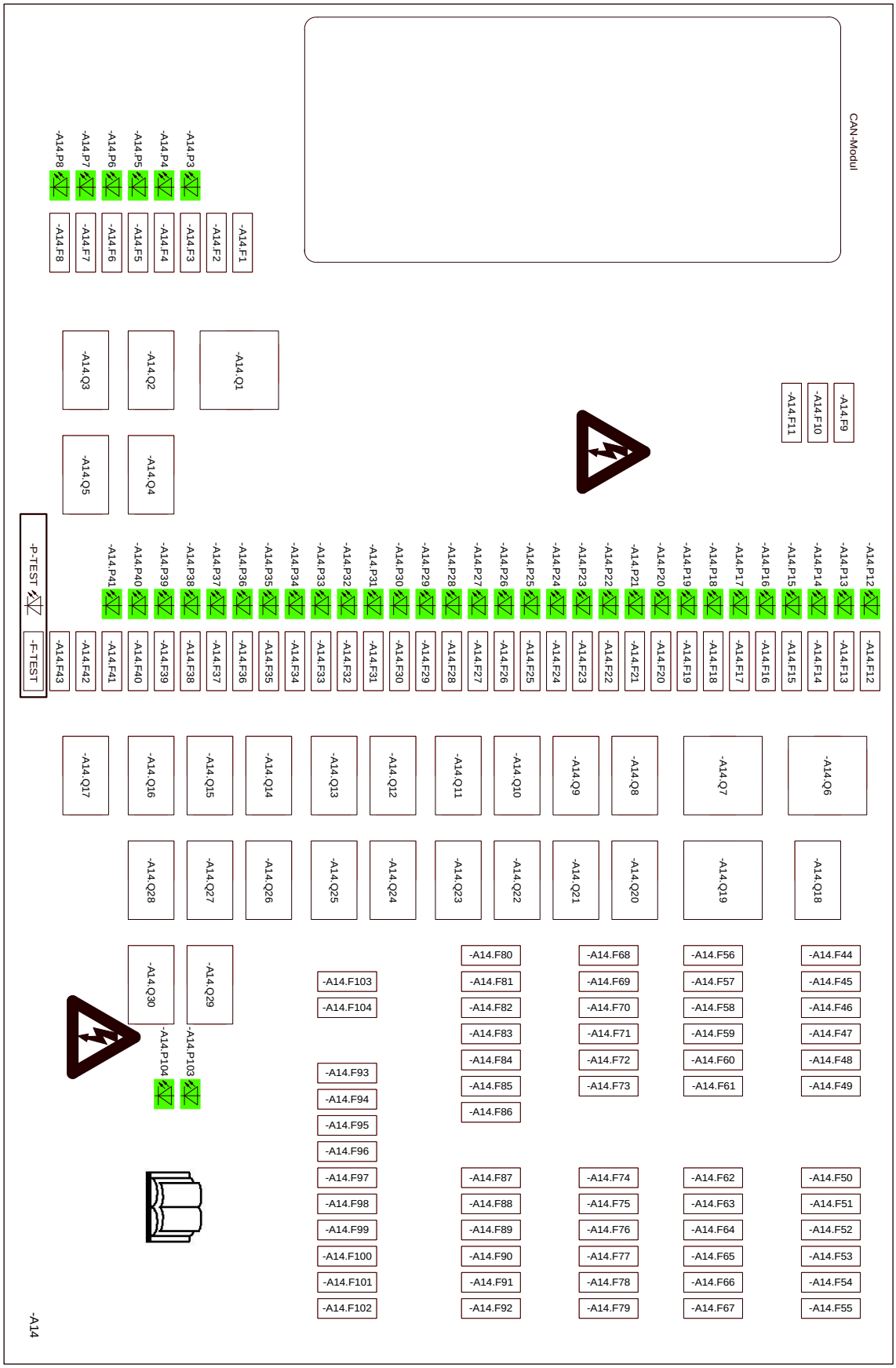
CAN-Modul
-A14.F1
-A14.F2
-A14.F3
-A14.P3
-A14.F4
-A14.P4
-A14.F5
-A14.P5
-A14.F6
-A14.P6
-A14.F7
-A14.P7
-A14.F8
-A14.P8
-A14.Q1
-A14.Q2
-A14.Q3
-A14.Q4
-A14.Q5
-A14.F9
-A14.F10
-A14.F11
-A14.P12
-A14.F12
-A14.P13
-A14.F13
-A14.P14
-A14.F14
-A14.P15
-A14.F15
-A14.P16
-A14.F16
-A14.P17
-A14.F17
-A14.P18
-A14.F18
-A14.P19
-A14.F19
-A14.P20
-A14.F20
-A14.P21
-A14.F21
-A14.P22
-A14.F22
-A14.P23
-A14.F23
-A14.P24
-A14.F24
-A14.P25
-A14.F25
-A14.P26
-A14.F26
-A14.P27
-A14.F27
-A14.P28
-A14.F28
-A14.P29
-A14.F29
-A14.P30
-A14.F30
-A14.P31
-A14.F31
-A14.P32
-A14.F32
-A14.P33
-A14.F33
-A14.P34
-A14.F34
-A14.P35
-A14.F35
-A14.P36
-A14.F36
-A14.P37
-A14.F37
-A14.P38
-A14.F38
-A14.P39
-A14.F39
-A14.P40
-A14.F40
-A14.P41
-A14.F41
-A14.F42
-A14.F43
-F-TEST
-P-TEST
-A14.Q6
-A14.Q7
-A14.Q8
-A14.Q9
-A14.Q10
-A14.Q11
-A14.Q12
-A14.Q13
-A14.Q14
-A14.Q15
-A14.Q16
-A14.Q17
-A14.Q18
-A14.Q19
-A14.Q20
-A14.Q21
-A14.Q22
-A14.Q23
-A14.Q24
-A14.Q25
-A14.Q26
-A14.Q27
-A14.Q28
-A14.F44
-A14.F45
-A14.F46
-A14.F47
-A14.F48
-A14.F49
-A14.F50
-A14.F51
-A14.F52
-A14.F53
-A14.F54
-A14.F55
-A14.F56
-A14.F57
-A14.F58
-A14.F59
-A14.F60
-A14.F61
-A14.F62
-A14.F63
-A14.F64
-A14.F65
-A14.F66
-A14.F67
-A14.F68
-A14.F69
-A14.F70
-A14.F71
-A14.F72
-A14.F73
-A14.F74
-A14.F75
-A14.F76
-A14.F77
-A14.F78
-A14.F79
-A14.F80
-A14.F81
-A14.F82
-A14.F83
-A14.F84
-A14.F85
-A14.F86
-A14.F87
-A14.F88
-A14.F89
-A14.F90
-A14.F91
-A14.F92
-A14.F93
-A14.F94
-A14.F95
-A14.F96
-A14.F97
-A14.F98
-A14.F99
-A14.F100
-A14.F101
-A14.F102
-A14.F103
-A14.F104
-A14.Q29
-A14.Q30
-A14.P103
-A14.P104
-A14

BX001-699

BMK	Designation	BMK	Designation
A14.F1	ISOBUS: 12V power supply	A14.F56	Motor control module MCM 2.1
A14.F3	Silage additives unit	A14.F57	Motor control module MCM 2.1
A14.F5	Built in-socket 3-pole, cooling box socket	A14.F58	Voltage converter T1
A14.F7	Socket ISOBUS In-cab	A14.F59	Voltage converter T2
A14.F8	Silage additives unit	A14.F60	Voltage converter T3 (optional)
A14.F13	Automatic climate control, evaporator fan, fan/PWM	A14.F62	KMB 1: voltage group 1
A14.F14	Diagnostics socket: OBD, Krone	A14.F63	KMB 1: voltage group 2
A14.F15	Quick-stop valve	A14.F64	KMB 2: voltage group 1
A14.F16	CB radio, radio	A14.F65	KMB 2: voltage group 2
A14.F17	Driver's seat	A14.F66	KMB 3: voltage group 1
A14.F19	Cigarette lighter	A14.F67	KMB 3: voltage group 2
A14.F25	Operating terminal, USB printer	A14.F68	Exhaust gas control unit ACM 2.1 evo
A14.F26	Voltage converter: switch-on signal	A14.F69	Exhaust gas control unit ACM 2.1 evo
A14.F27	Automatic climate control, steering column, radio	A14.F70	Exhaust gas control unit ACM 2.1 evo
A14.F28	Lifting unit control, KMB 1 - 4, KMC	A14.F74	Function module cabin voltage group 1
A14.F29	Drive computer, alternator, motor control modules, exhaust gas control unit	A14.F75	Function module cabin voltage group 2
A14.F30	Function modules, camera system, steering column, supply sensors DRC, KRONE SmartConnect	A14.F76	Function module cabin voltage group 3
A14.F31	Armrest, manual operation, light control unit	A14.F77	Function module cabin voltage group 4
A14.F32	AutoScan, moisture measurement, metal detection	A14.F78	Front function module: voltage group 1
A14.F34	Auto-loading system	A14.F79	Front function module: voltage group 2
A14.F39	Right wiper	A14.F80	CB radio, interior lamp main light, radio, door switch
A14.F40	Front wiper	A14.F81	Lifting unit control, light control unit
A14.F41	Left wiper	A14.F87	Front function module: voltage group 3
A14.F42	Alternator: D+	A14.F88	Front function module: voltage group 4
A14.F43	Central electrical system circuit board	A14.F89	Rear function module: voltage group 1
A14.F44	Drive computer	A14.F90	Rear function module: voltage group 2
A14.F45	Drive computer	A14.F91	Rear function module: voltage group 3

BMK	Designation	BMK	Designation
A14.F46	Drive computer	A14.F92	Rear function module: voltage group 4
A14.F47	KMB 4: voltage group 1	A14.F93	Front function module, rear function module
A14.F48	KMB 4: voltage group 2	A14.F94	Function module cabin, KMC: electronics supply
A14.F50	KMC: voltage group 1	A14.F95	Lifting unit control, KMB 1- 4
A14.F51	KMC: voltage group 2	A14.F96	Armrest, steering column, momentary switch ladder lighting, ignition lock
A14.F52	KMC: voltage group 3	A14.F98	Drive computer, motor control module CPC4
A14.F53	KMC: voltage group 4	A14.F99	Diagnostics socket: ISOBUS, OBD, Krone
A14.F54	KMC: voltage group 5	A14.F100	Auto-loading system
A14.F55	KMC: voltage group 6		

34.1.3 Overview of control units

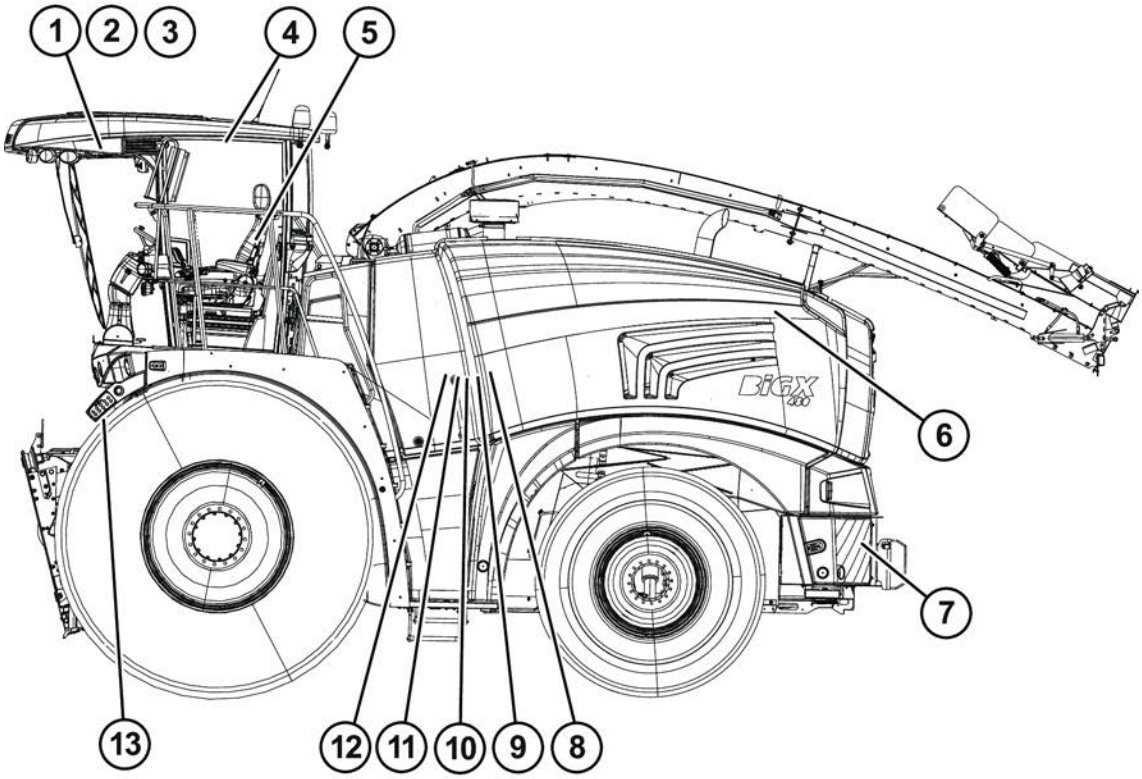

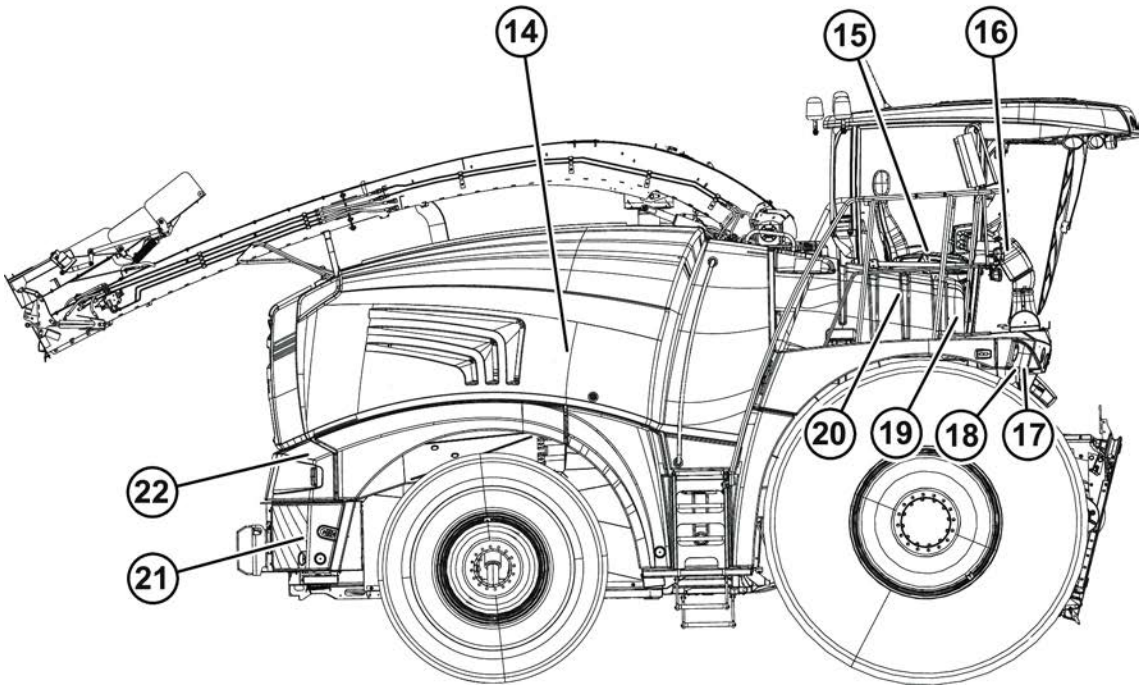

BX001-694

Pos	ED	Designation	Pos	ED	Designation
1	A1	Automatic climate control	12	A13	KRONE Motor Bridge 4 (KMB4)
8	A2	Drive computer (DRC)	20	A14	Circuit board central electrical system (CE)
9	A3	Operating control (KMC)	3	A16	Radio
10	A4	KRONE Motor Bridge 2 (KMB2)	15	A17	Armrest

Pos	ED	Designation	Pos	ED	Designation
5	A5	Driver’s seat	14	A18	Motor control unit (MTU MCM 2)
7	A6	KRONE Motor Bridge 3 (KMB3)	19	A19	Common Powertrain Controller (CPC 4)
11	A7	Lifting unit control (LUC)	22	A20	Exhaust aftertreatment (ACM2.1 evo)
13	A8	Grinding control unit (GC)	16	A21	Steering column
17	A9	Function module front (FM)	18	A22	KRONE Motor Bridge 1 (KMB1)
21	A10	Function module rear (FM)	6	A23	Urea dosing unit
4	A11	Function module cabin (FM)		A30	Camera system
2	A12	Light control unit (LC)		A32	ForageCam

34.1.4 Overview sensors

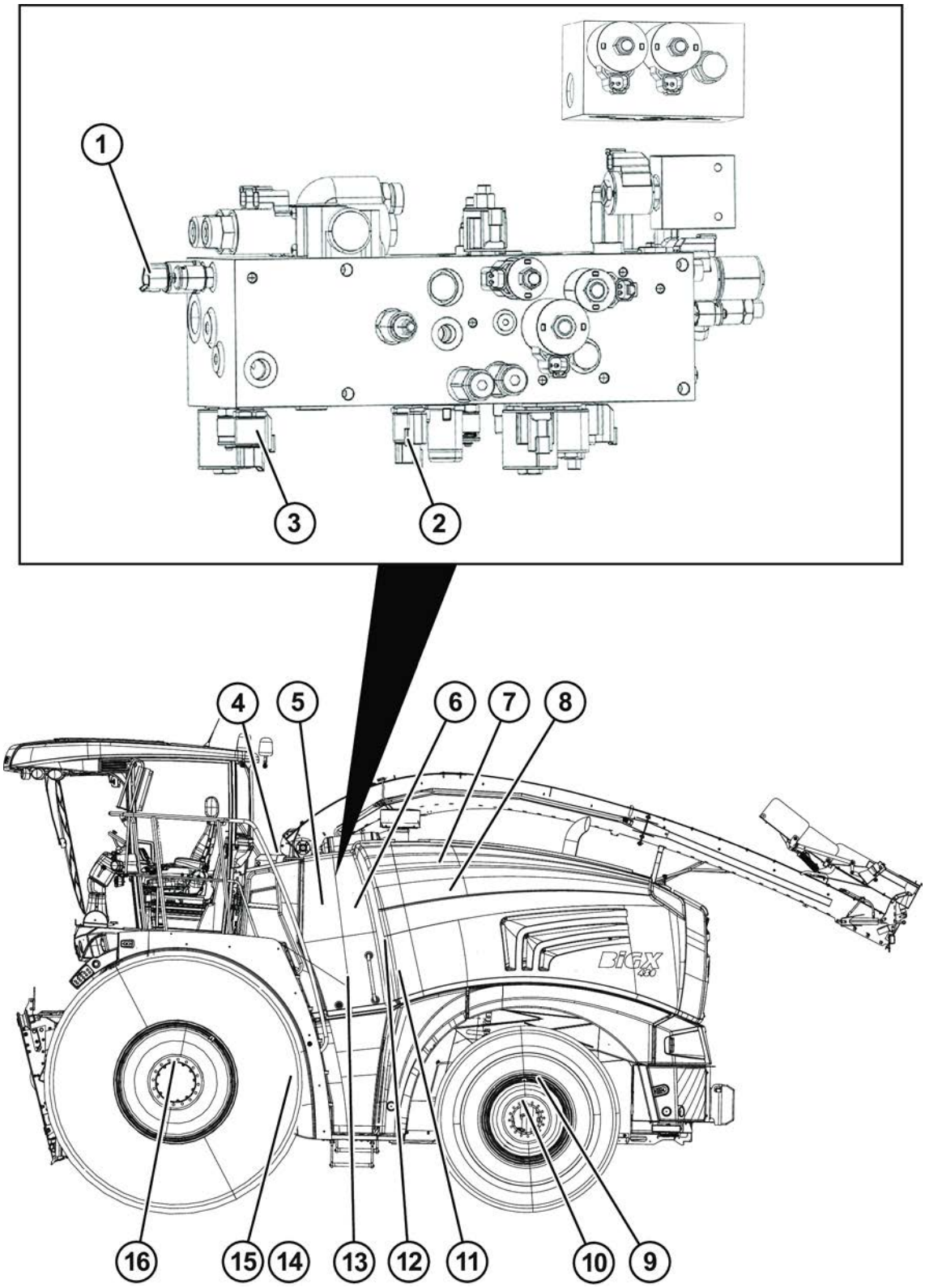

BX001-697

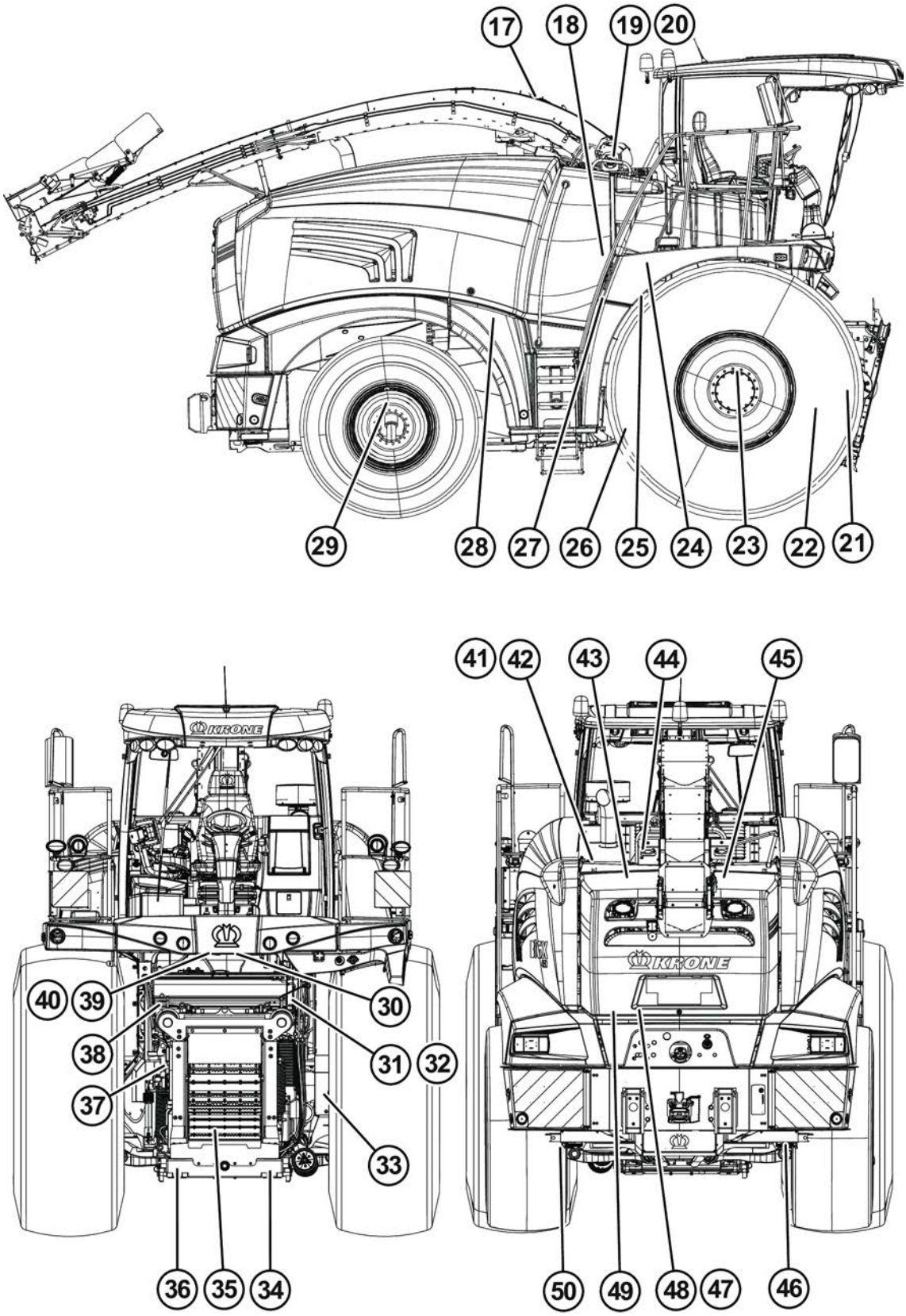
17
18
19
20
29
28
27
26
25
24
23
22
21
41
42
43
44
45
40
39
38
37
30
31
32
33
36
35
34
50
49
48
47
46

BX001-698

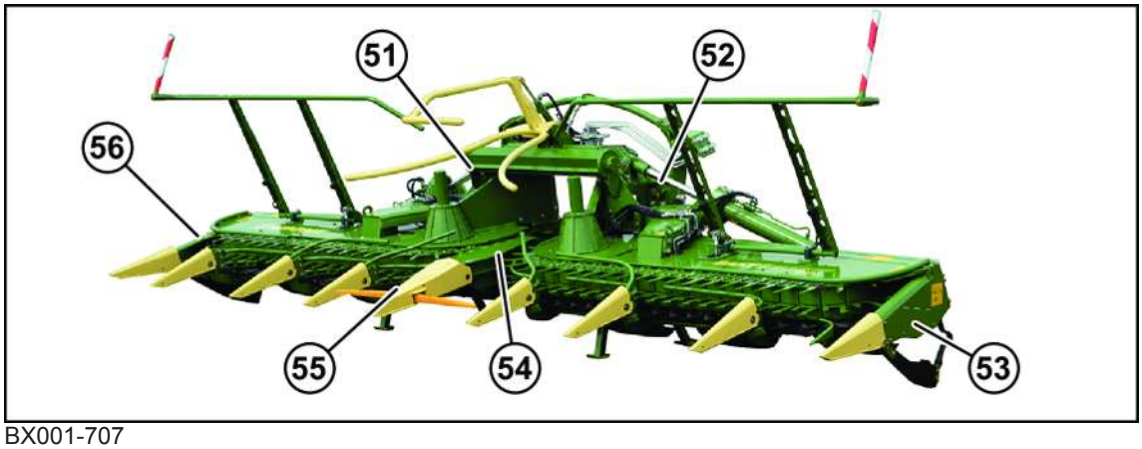

BX001-707

Pos	ED	Designation	Pos	ED	Designation
	B2	Automatic climate control pressure	12	B42	Air filter contamination 1
48	B5	Pressure pump MA	19	B44	Spout position centre
47	B6	Pressure pump MB	20	B45	Spout position bottom
2	B7	Brake tank pressure	4	B46	Spout rotation pulses
27	B8	Parking brake pressure	34	B47	Pendulum frame position left
39	B9	Service brake pressure	36	B48	Pendulum frame position right
49	B10	Swivel angle pump	52	B49	Position header left (2-part EasyCollect)
16	B11	Speed front left	51	B50	Position header right (2-part EasyCollect)
23	B12	Speed front right	28	B51	Filling level fuel tank
10	B13	Speed rear left	33	B54	Chopping drum speed
29	B14	Speed rear right	13	B55	Main belt release
9	B15	Steering angle rear left	11	B56	Gearbox oil pressure
40	B16	Brake pedal angle	6	B57	Work hydraulics oil filter
45	B17	Rear-view camera	50	B58	Position axle level left
44	B18	Additional camera	46	B59	Position axle level right
	B20	Ambient temperature	14	B60	Header speed
17	B22	Moisture measurement	15	B61	Intake speed
35	B23	Metal detection	22	B62	Path sensor CropControl
54	B24	AutoScan (EasyCollect)		B63	Charge pressure CropControl
	B25	Cooling water filling level	21	B64	Acceleration sensor RockProtect
38	B26	Grinding stone position right	26	B65	Additional axle pressure
31	B27	Position grinding stone left		B66	Filling level sensor/quality sensor
32	B28	Grinding flap closed	43	B68	Mixing tube temperature
18	B30	Discharge accelerator	41	B71	NOx in front of catalytic converter
1	B31	Lifting unit pressure	42	B72	NOx behind catalytic converter
37	B32	Lifting unit position	3	B73	Prioritization steering
53	B33	Lifting unit height left	24	B74	Filling level of silage additives

Pos	ED	Designation	Pos	ED	Designation
56	B34	Lifting unit height right	25	B75	Silage additives flow
54	B35	Flexible row tracer		B77	ForageCam
30	B38	Pressure steering		B78	Camera
7	B39	Return suction filter	5	B96	Central lubrication cycle switch
8	B40	Oil tank filling level			

34.1.5 Overview actuators

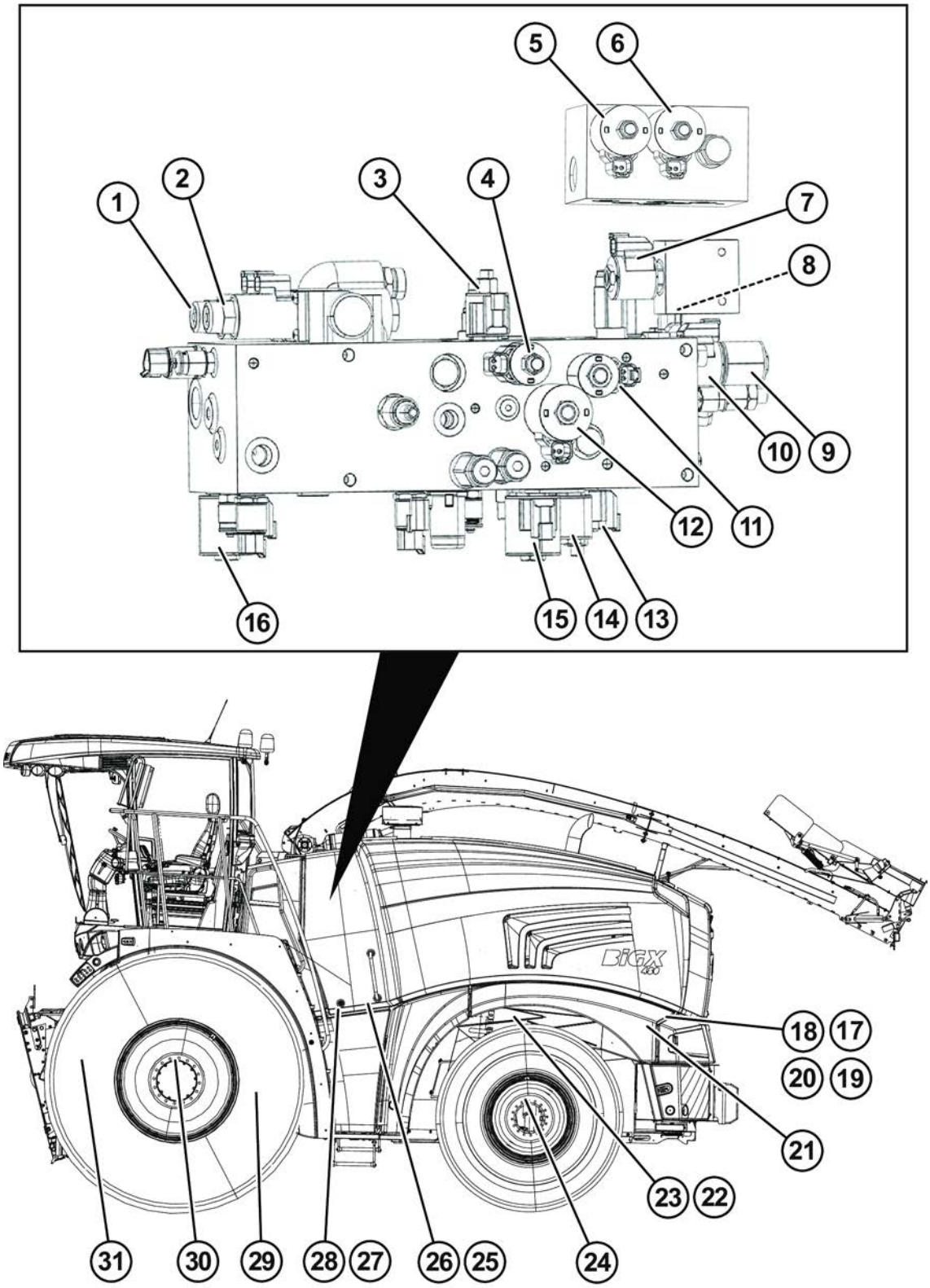

BX001-695

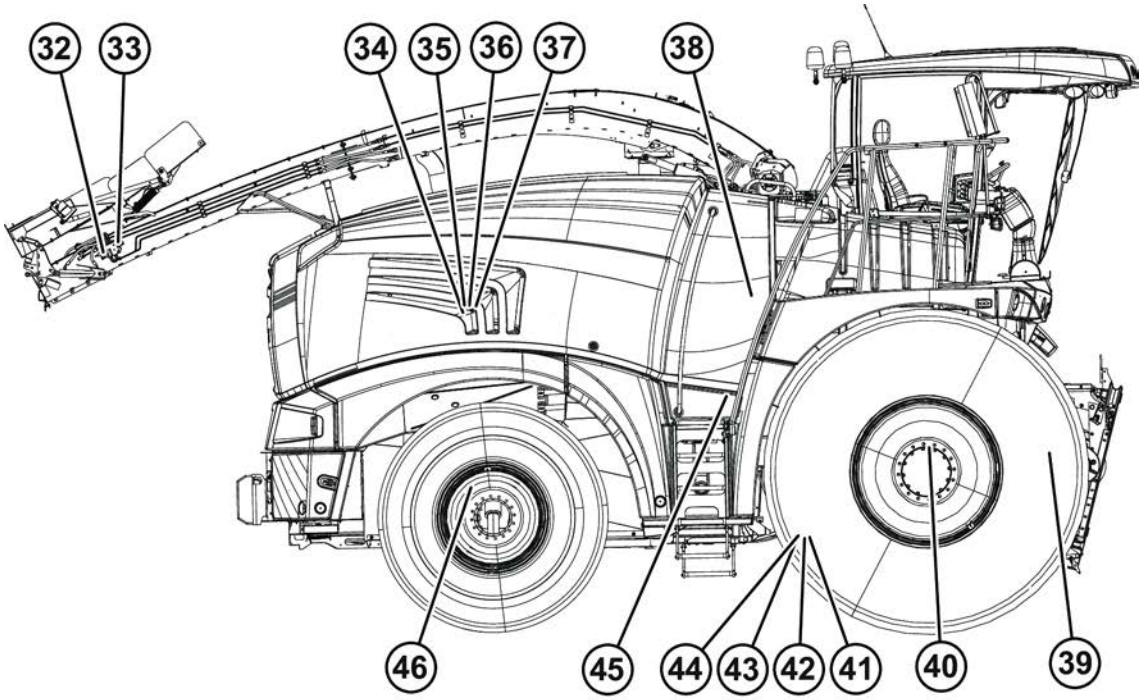
32
33
34
35
36
37
38
46
45
44
43
42
41
40
39

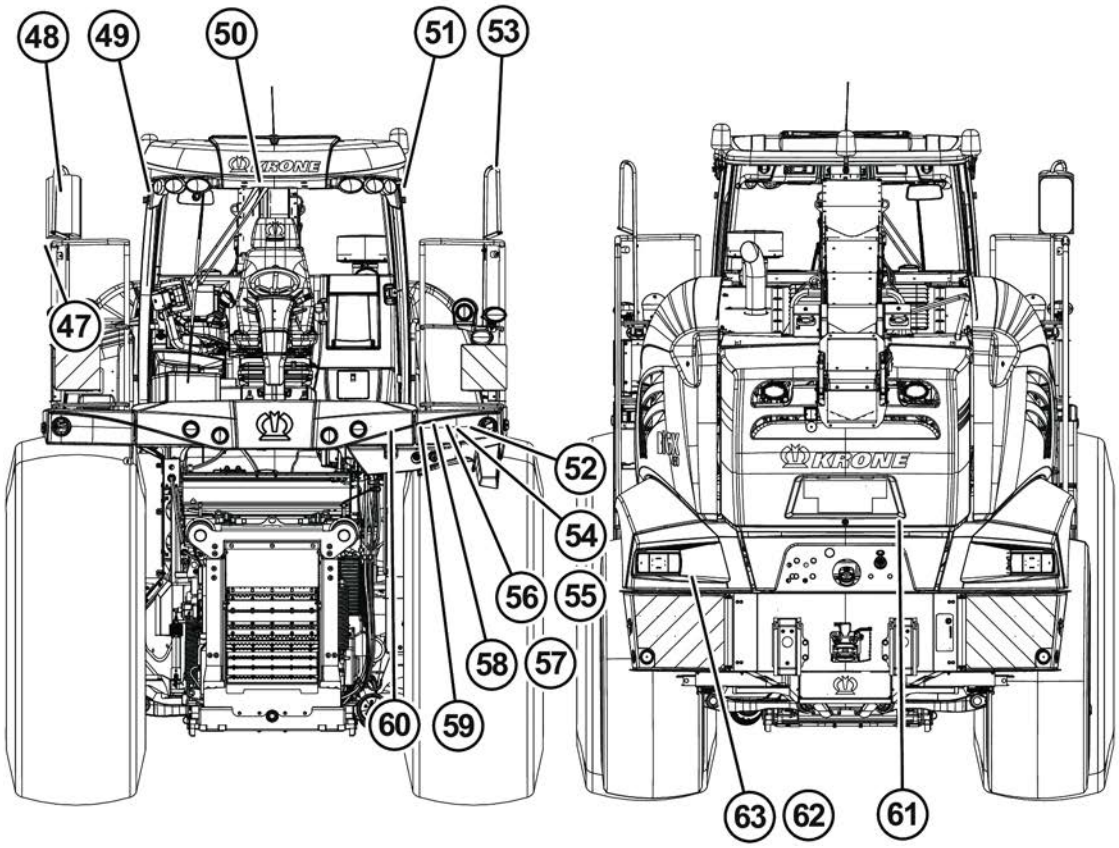
48
49
50
51
53
47
52
54
56
55
58
57
60
59
63
62
61

BX001-696

Pos	ED	Designation	Pos	ED	Designation
15	K3	Pilot valve turn spout	40	K13	Wheel motor front right
	K9	Evaporator blower fan/PWM	24	K14	Wheel motor rear left
62	K10	Drive pump forward	46	K15	Wheel motor rear right
63	K11	Drive pump backward		K16	Parking brake
30	K12	Wheel motor front left			

Pos	ED	Designation	Pos	ED	Designation
50	M1	Wiper front	31	M9	Engine counterblade left
51	M2	Wiper left	39	M10	Engine counterblade right
49	M3	Wiper right	38	M11	Engine discharge accelerator (optional)
21	M4	Starter		M12	Windscreen water pump
47	M5	Wide-angle mirror right	45	M13	Engine corn conditioner
	M6	Automatic climate control	52	M15	Mirror left
48	M8	Mirror right			

Pos	ED	Designation	Pos	ED	Designation
3	Q1	Lower spout	57	Q48	Raise plant divider/lower holding-down clamp
4	Q2	Raise spout	58	Q49	Lower plant divider/lower hold-ing-down clamp
12	Q3	Rotate spout right/left	55	Q50	Fold out header/support wheel out
7	Q4	Main drive brake intake	56	Q51	Fold in header/support wheel in
14	Q5	Lower spout flap	53	Q52	Grinding stone right/left
11	Q6	Raise spout flap	54	Q53	Grinding stone stop
8	Q7	Chopping drum main coupling	25	Q55	Intake forward
5	Q8	Tension main belt	26	Q56	Intake backward
32	Q13	Fold out spout extension	27	Q57	Header forward
33	Q14	Fold in spout extension	28	Q58	Header backward
61	Q16	Main battery switch	29	Q59	Quick stop
	Q17	Solenoid valve heating	34	Q62	Valve Steer autopilot right
59	Q29	Grinding flap open	35	Q63	Steer autopilot left
	Q31	Storage switch grass/maize	36	Q64	Lock autopilot right
	Q32	Lifting unit accumulator	37	Q65	Lock autopilot right
	Q33	Engine cleaning 1	60	Q67	Unlocking header
17	Q35	Auxiliary hydraulics 1 up	22	Q69	Lift/lower axle level
18	Q36	Auxiliary hydraulics 1 down	23	Q70	Lock axle level regulation
19	Q37	Auxiliary hydraulics 2 up	6	Q71	Release main belt
20	Q38	Auxiliary hydraulics 2 down	41	Q73	Lift additional axle
9	Q39	Turn pendulum frame left	42	Q74	Lower additional axle
10	Q40	Turn pendulum frame right	43	Q75	Lock additional axle 1

Pos	ED	Designation	Pos	ED	Designation
2	Q41	Raise lifting unit	44	Q76	Lock additional axle 2
1	Q42	Lower lifting unit		Q78	Tank heating valve
13	Q45	Float position pendulum frame	16	Q79	Pressure switch-off

34.2 External starting of the machine

⚠ *WARNING*

Risk of injury due to exploding battery gas

If the booster cables are not connected properly, an explosion may occur. As a result, people may be seriously injured or killed or the electrical system could be damaged.

- ▶ Jump start the diesel engine with 24 volts only.
- ▶ First connect positive cable to positive pole of the external voltage source, then connect it to the positive pole of the left battery (C2) on machine side.
- ▶ Then connect negative cable to negative pole of external voltage source and then to negative pole of right battery (C1) on machine side.

NOTICE

Damage to the machine by connecting the jump-start battery to the starter

If the jump-start battery for jump-starting the machine is connected to the starter, the starter and the battery will be damaged.

- ▶ Never connect the jump-start battery to the starter.

BXG000-060

The power supply of the machine is 24 V. Two 12 V batteries (C1 and C2) are connected in series and supply the vehicle electronics with 24 V.

The engine can be started by means of booster cables and external voltage source (24 V), if necessary.

The voltage of external voltage source must correspond to the vehicle electronics voltage (24 V).

The vehicle electronics is damaged by using an external voltage source with higher or lower voltage.

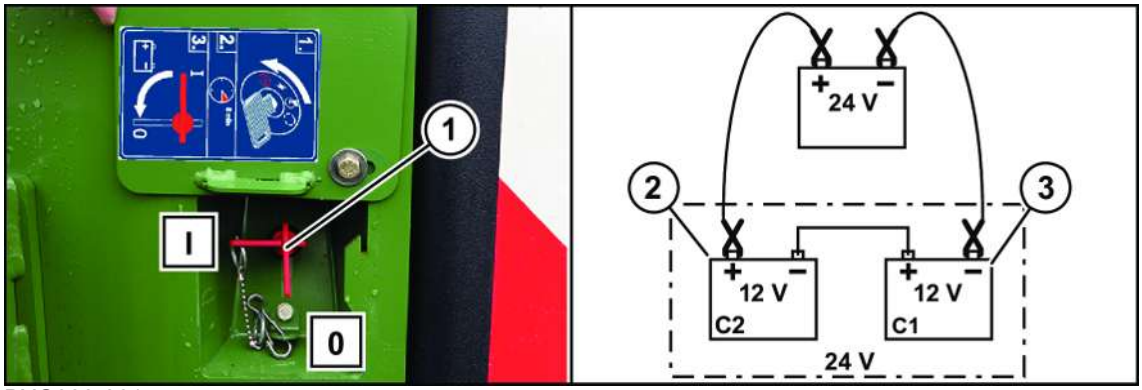

BXG000-061

Connecting the jump leads

- The main battery switch is in position "0" (circuit interrupted), *refer to page 355*.
- First connect positive cable to positive pole of the external voltage source, then connect it to the positive pole of the left battery (C2) on machine side.
- Then connect the negative cable to the negative pole of the external voltage source and afterwards to the negative pole of the right battery on machine side (C1)

Starting the engine

- Switch the main battery switch to position "I" (circuit closed).
- Start the engine.

Remove the jump leads after the engine starts

- Disconnect negative cable from negative pole of the right battery (C1).
- Disconnect negative cable from negative pole of external voltage source.
- Disconnect positive cable from positive pole of the left battery (C2).
- Disconnect positive cable from positive pole of external voltage source.

34.3 Removing crop blockages in area of crop flow

For an overview of the tightening torques, *refer to page 424*.

⚠ *WARNING*

Danger of injury due to unexpected movement of the machine and moving parts

There is an increased danger of injury when removing crop blockages

- Shut down and safeguard the machine, *refer to page 34*.
- Ensure that no one approaches the machine as long as the follow-up alarm is sound.

⚠ *WARNING*

Risk of injury due to turning parts in the crop flow

After switching off the main drive, the chopping drum, the discharge accelerator and the corn conditioner may continue to run. If this is the case, an acoustic follow-up alarm can be heard.

- For all tasks and when eliminating malfunctions, always be absolutely certain to wait until the units have come to a complete stop.

Bringing the machine into a safe state

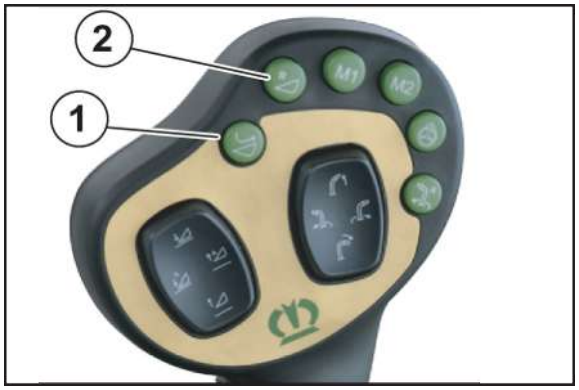

BX000-324

- Stop the machine in case of blockage.
- To switch off the intake/header drive, press the “Intake/header” (1) key.
- Move the machine back a little.
- Lower the header to the ground.
- Switch off main coupling.
- Switch off the engine, remove the ignition key in order to avoid accidental start.
- Inform all people that the crop flow is blocked and the inner parts of the machine will continue to move as long as the follow-up alarm sounds.
- Wait until the follow-up alarm stops.

The blockage in the crop flow must only be removed after the mentioned work steps have been performed and the follow-up alarm has stopped.

- Check the crop flow for blockages and remove them, if necessary.

- In case of crop blockages between the chopping drum and the spout*refer to page 588*.
- In case of crop blockages in the spout,*refer to page 590*.

Reversing

Depending on the extent of the blockage, you can reverse the intake/header with chopping drum switched off/on in order to remove a part of the blockage.

Reversing with chopping drum switched on

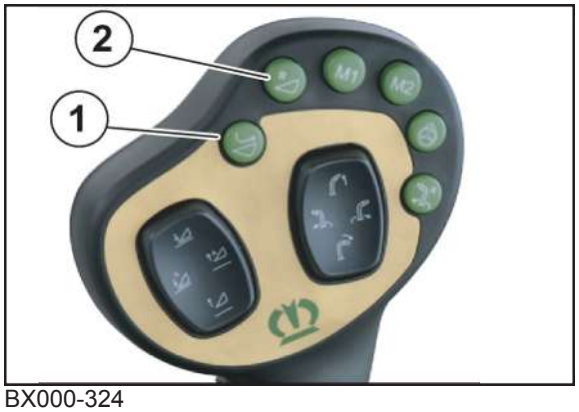

BX000-324

If there are blockages in the area of intake/header, reverse with the chopping drum switched on.

- Start diesel engine.
- Raise header until headland position is reached.
- Switch on main coupling.
- Reverse the intake/header by pressing the “Reverse intake/header” key (2).
- Release the “Reverse intake/header” key (2) once the entire forage was ejected from header and intake.
- Bring the machine into a safe state,*refer to page 586*.

Reversing with chopping drum switched off

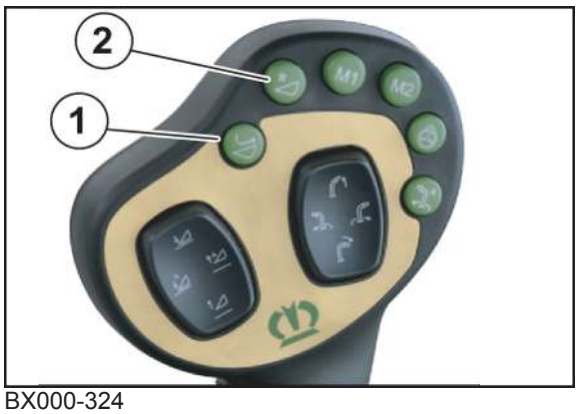

BX000-324

If serious blockages occur, the intake/header must be reversed with the chopping drum switched off. This will prevent overloading the drives. The main coupling must not be connected until the entire crop flow has been checked for blockages and any blockages have been removed.

- If a blockage occurs, stop the machine.
- Switch off the intake/header by pressing the "Intake/header" (1) key on the control lever.
- Switch off the main coupling.
- Move the machine back a little.
- Raise the lifting unit into the headland position.
- Press and hold down the "Reverse intake/header" key (2) on the control lever.
  - ⇨ The speed of the diesel engine is reduced to the idle speed, the main belt is disconnected from the diesel engine, the main coupling is automatically connected and the intake and the header reverse. This process may take several seconds.
  - ⇨ As long as the intake and the header are reversing, a warning signal sounds.
- Release the "Reverse intake/header" key (2) when all the forage has been ejected from the header and the intake.
- Bring the machine into a safe state, *refer to page 586*.

Removing crop blockages between the cutter drum and the discharge accelerator

⚠ WARNING

Risk of injury from sharp-edged components

When removing crop blockages, there is an increased risk of injury from the sharp-edged components of the crop flow.

- ▶ When eliminating blockages, wear protective gloves.

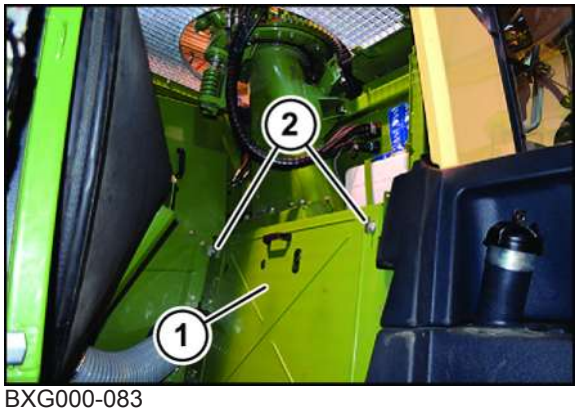

BXG000-083

- ✓ The machine is in a safe state, *refer to page 586*.
- ▶ Open the side hood on the right, *refer to page 116*.
- ▶ Loosen the quarter turn fasteners (2) and remove the cover (1).
- ▶ Set down the cover (1) outside the machine.

Maintenance flap transfer shaft

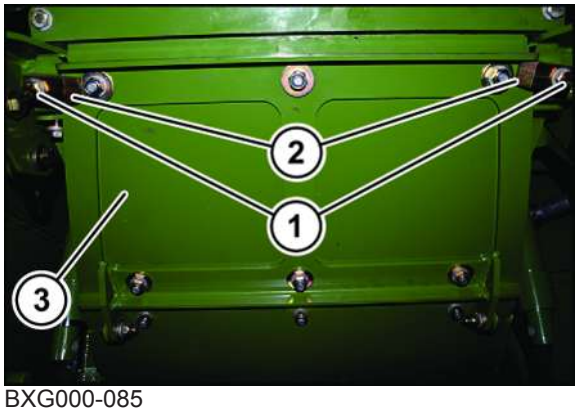

BXG000-085

- ▶ Loosen the screws (1) and turn the clamping pieces (2) to the side.
- ▶ Fold down the maintenance flap (3).
- ▶ Manually remove blocked crops from the crop flow channel.
- ▶ Completely remove adhesions from the inner walls of the crop flow channel using a suitable tool.
- ▶ If required, remove and clean the grass channel *refer to page 256* or the corn conditioner.
- ▶ Install the grass channel *refer to page 284* or the corn conditioner *refer to page 257*.
- ▶ When the maintenance work is complete, fold up the maintenance flap (3), turn the clamping pieces (2) in front of the maintenance flap and tighten the screws (1).

Grass channel maintenance flap

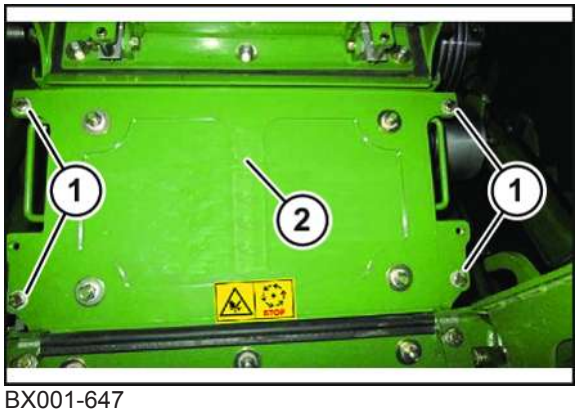

BX001-647

- Loosen the screws (1) and lift the maintenance flap (2) to the side.
- Manually remove blocked crops from the crop flow channel.
- Completely remove adhesions from the inner walls of the crop flow channel using a suitable tool.
- When the maintenance work is complete, insert the maintenance flap (2) and screw in the screws (1).

Removing crop blockages between the discharge accelerator and the spout

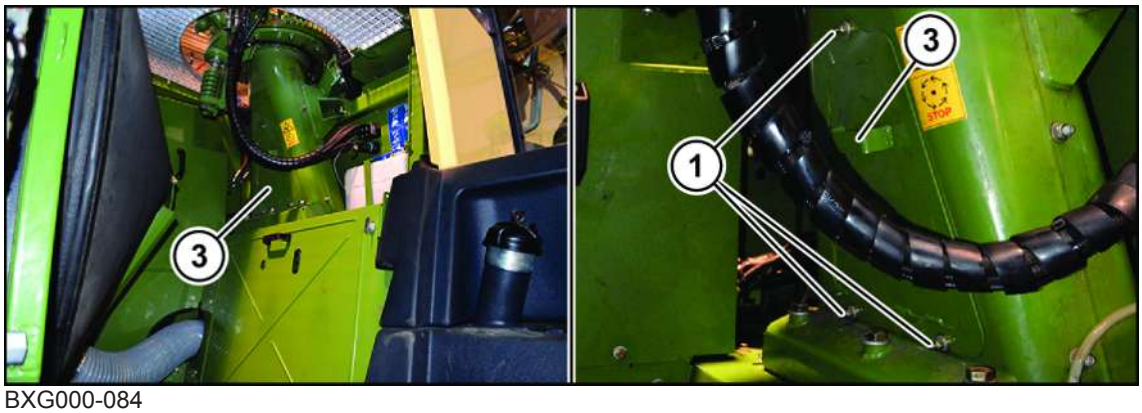

BXG000-084

✓ The machine is in a safe state, *refer to page 586*.

- Dismount the screws (1).
- Remove the maintenance flap (3) from the channel support.
- Manually remove blocked crops from the crop flow channel.
- Completely remove adhesions from the inner walls of the crop flow channel using a suitable tool.
- When the maintenance work is complete, insert the maintenance flap (3) and screw in the screws (1).

Removing crop blockages from the spout

⚠ WARNING

Ris of injury due to falling

There is a risk of falling when working at heights on the machine. As a result, people may be seriously injured or killed.

- ▶ Make sure you stand securely.
- ▶ Use a suitable fall protection.
- ▶ Secure the area below the assembly point against falling objects.

- ▶ Open the maintenance flap (1) and the maintenance flap (3) (version with "Spout extension") on the spout from the roof.
- ▶ To open the maintenance flaps (2), swivel the spout forwards on the left and lower until the maintenance flaps are accessible from the platform.

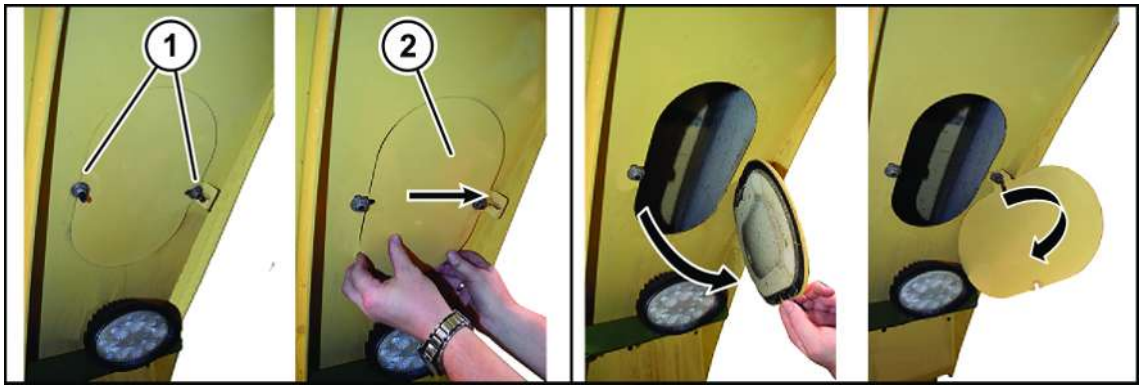

BX001-609

- ▶ Loosen the nuts (1) and push the maintenance flap (2) to the side.
- ▶ Open and turn the maintenance flap.
- ▶ When the maintenance work is complete, turn back and close the maintenance flap (2).
- ▶ Push the maintenance flap (2) into the original position and tighten the screws (1).

Crop flow cover

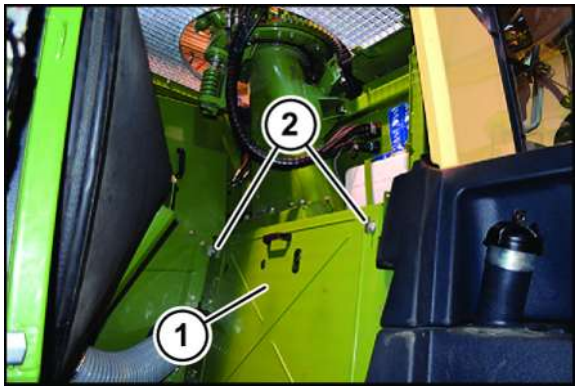

BXG000-083

Mount the cover (1) after removing the blockages in the crop flow.

- ▶ Attach the cover (1) and lock with the quarter turn fasteners (2).

>>>

Removing corn conditioner [▶ 233]

35 Repairs, maintenance and settings by technicians

This chapter describes repair, maintenance and adjustment work on the machine which may be performed by qualified technicians only. The chapter "Personnel qualification of the technicians" must be read and observed in full, *refer to page 20*.

⚠ WARNING

Risk of injury due to non-observance of relevant safety notices

If the relevant safety notices are not observed, persons may get seriously injured or killed.

- To avoid accidents, the basic safety instructions must be read and observed, *refer to page 19*.

⚠ WARNING

Risk of injury due to non-observance of safety instructions

If the relevant safety routines are not observed, persons may be seriously injured or killed.

- The safety routines must be read and observed to avoid accidents, *refer to page 34*.

⚠ WARNING

Risk of injury or damage to the machine due to incorrect repair, maintenance and setting work.

Machines that are not repaired, maintained or set by technicians can exhibit faults caused by a lack of knowledge. As a result, people may be seriously injured or killed.

- Only an authorised technician may carry out repair, maintenance and setting work at the machine.
- Observe the qualification of technicians, *refer to page 20*.

35.1 Car jack contact points

⚠ WARNING

Risk of injury due to raised machine

There is a risk to individuals from the machine falling and parts which are swinging in an uncontrolled manner.

- Use only permitted hoists and slings with a sufficient load-bearing capacity. For the weights, see type plate of the machine.
- Note the information on the suspension points provided.
- Make sure the lifting means are properly secured.
- Never stay under the suspended machine.
- If work has to be performed under the machine, securely support the machine, *refer to page 34*.

The car jack contact points may be used for changing wheels only; for reasons of stability, only one car jack contact point may be used.

If the machine is to be jacked up, *refer to page 592*.

- ✓ The header is removed.
- ✓ The rear weights are removed.
- ✓ The machine is parked on horizontal and level ground capable of bearing the load.
- ✓ The steering axle is turned all the way to the left.
- ✓ The chassis height adjustment is in the lowest position.
- ✓ The machine is shut down and safeguarded, *refer to page 34*.

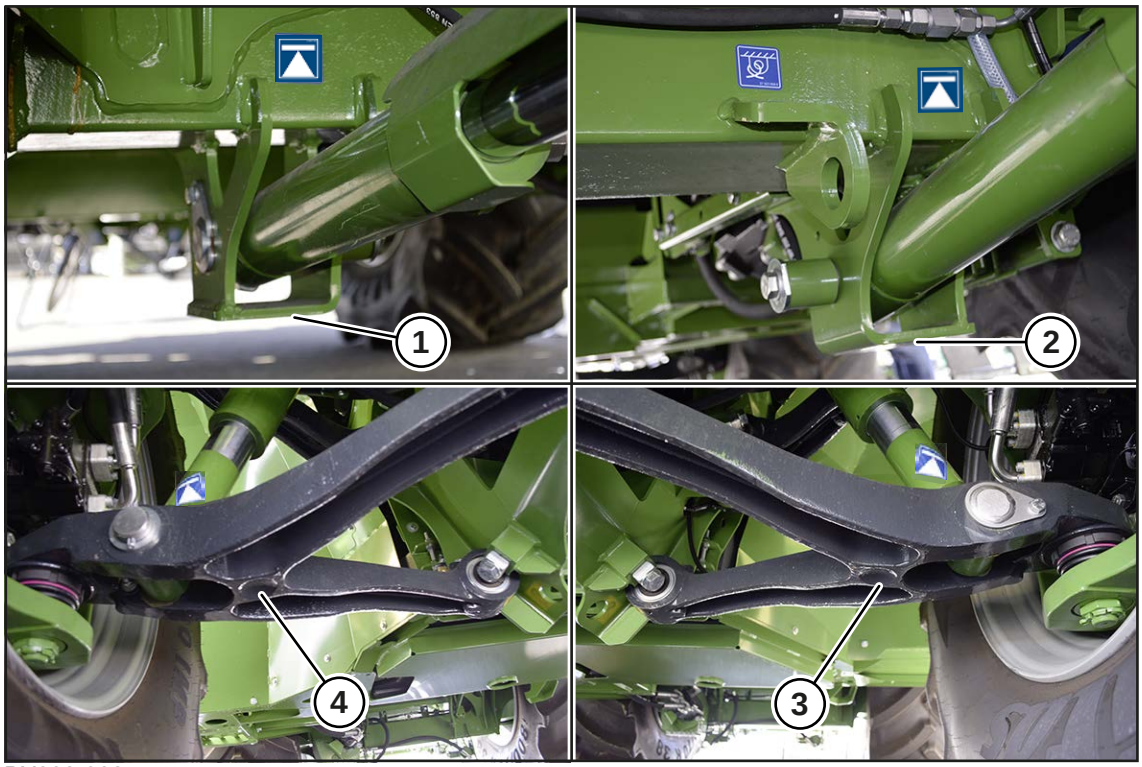

BX002-382

1 Car jack contact point front axle on left
2 Car jack contact point front axle on right
3 Car jack contact point rear axle on right
4 Car jack contact point rear axle on left

35.2 Jacking up the machine

⚠ WARNING

Danger to life caused by machine movement!

If the machine is not raised by means of a suitable hoist and if it is not securely supported, it may move unintentionally. As a result, people may be seriously or fatally injured.

- ▶ When selecting the hoist, observe the axle loads on the type plate.
- ▶ Only use jack stands with a permitted load-carrying capacity of at least 15 tonnes.
- ▶ Only use hoists and jack stands with suitable holder and sufficiently dimensioned supporting surface.
- ▶ Ensure sufficiently dimensioned contact surface for hoist and jack stand.
- ▶ Securely support the raised machine, *refer to page 34*.

The following describes how to jack up the complete machine.

If the machine has to be jacked up to change a wheel, for example, it is sufficient to raise just the respective wheel. In this case the steps described below only have to be performed for the corresponding wheel.

- ✓ The header is removed.
- ✓ The rear weights are removed.
- ✓ The machine is parked on horizontal and level ground capable of bearing the load.
- ✓ The steering axle is turned all the way to the left.
- ✓ The chassis height adjustment is in the lowest position.
- ✓ The machine is shut down and safeguarded, *refer to page 34*.

Securing independent wheel suspension

Left-hand side

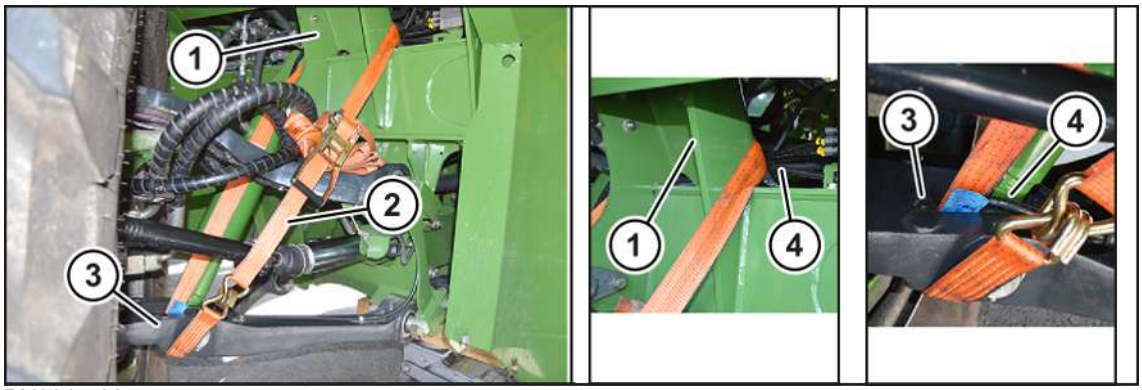

BX001-728

WARNING! Danger to life caused by machine movement! Only use lashing straps with a permitted towing capacity of at least 1,000 kg. In order to prevent the lashing strap from being damaged, use sufficient edge protection.

- ▶ Guide the lashing strap (2) behind the engine support (1) and through the transverse link (3).
- ▶ Tension the lashing strap. When doing this, make sure that the lubrication lines (4) are not crushed.

Right-hand side

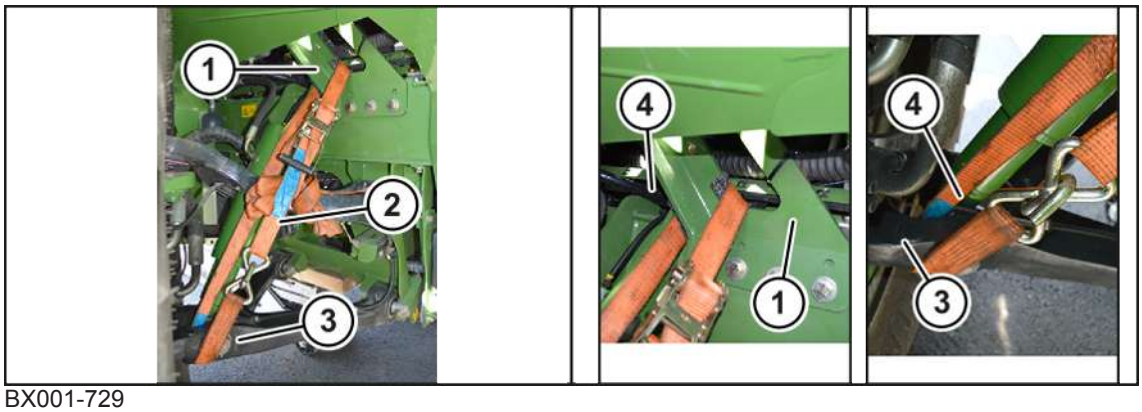

BX001-729

WARNING! Danger to life caused by machine movement! Only use lashing straps with a permitted towing capacity of at least 1,000 kg. In order to prevent the lashing strap from being damaged, use sufficient edge protection .

- Guide the lashing strap (2) through the engine support (1) and through the transverse link (3). When tensioning, make sure that the lubrication lines (4) are not crushed.
- Start the diesel engine.
- Move the steering axle to straight-ahead position.
- Shut down and safeguard the machine, *refer to page 34*.

Jack up rear axle

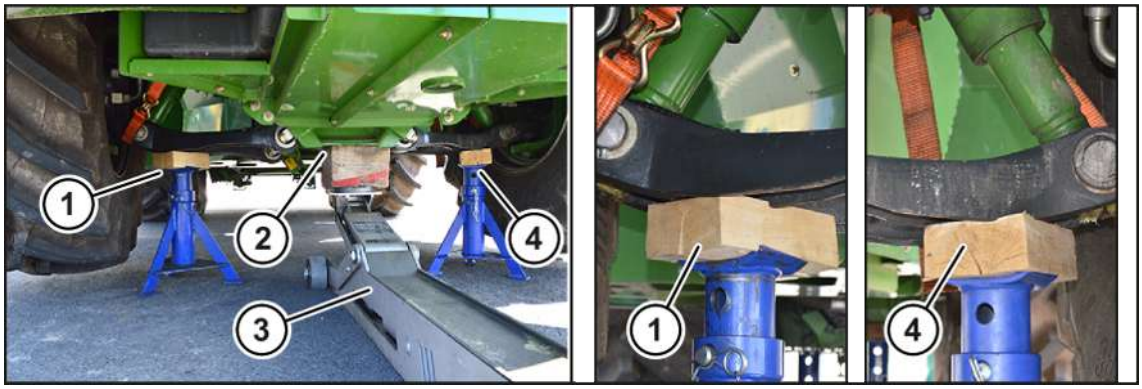

BX001-730

- Centre the hoist (3) under the main frame (2).
- Increase the supporting surface, e.g. using square timbers.
- Lift the machine until the distance between the rear wheels and the ground is at least 10 cm and the wheels can rotate freely.
- Securely support the rear axle on the suspension arms using trestles (1, 4).
- Lower the machine until the rear axle is fully positioned on the trestles (1, 4).
- Remove the hoist (3).

Jacking up front axle

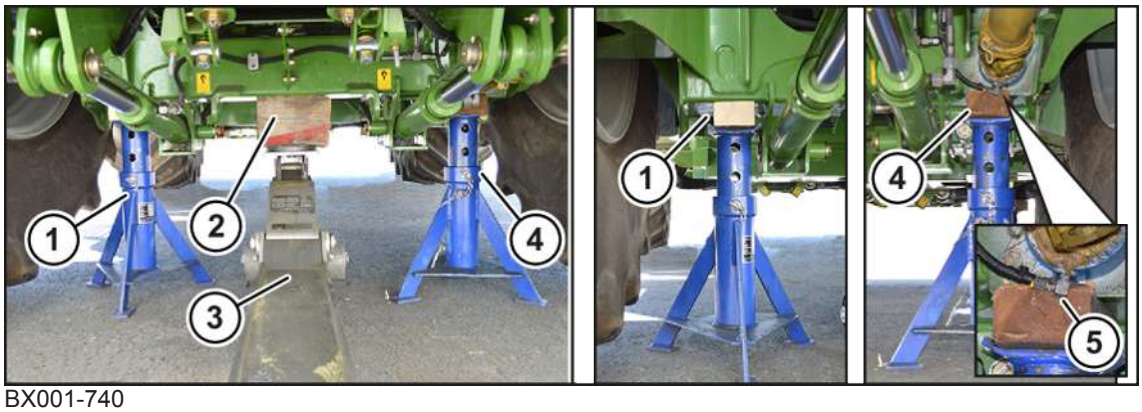

BX001-740

- Position the hoist (3) centred under the front axle (2).
- Increase the supporting surface, e.g. using square timbers.
- Raise the machine until the distance between the front wheels and the ground is at least 10 cm and the wheels are able to rotate freely.

- Securely support the front axle (2) as far as possible towards the outside by using jack stands (1, 4). When supporting the front axle, ensure that the grease nipple (5) is not damaged.
- Lower the machine so that the front axle (2) rests completely on the jack stands (1, 4).
- Remove the hoist (3).

36 Waste disposal

After the service life of the machine has expired, the individual components of the machine must be disposed of properly. The currently applicable country-specific waste disposal directives and the concerning valid laws must be observed.

Metal parts

- All metal parts must be brought to a metal recycling centre.
- The parts must be freed from operating fluids and lubricants (gearbox oil, oil from hydraulic system, ...) before being scrapped.
- The operating fluids and lubricants must be brought separately to an environmentally friendly disposal point or recycling centre.

Operating fluids and lubricants

- Operating fluids and lubricants (diesel fuel, coolant, gearbox oil, oil from hydraulic system, …) must be brought to a disposal point for waste oil.

Synthetic materials

- All synthetic materials must be brought to a recycling centre for synthetic materials.

Rubber

- Rubber parts (hoses, tyres, …) must be brought to a rubber recycling centre.

Electronic scrap

- All electronic parts must be brought to a disposal point for electronic scrap.

37 Appendix

37.1 Parameter list

>>>

Parameter: BiG X 480 | 530 | 580 | 630

Software version: D2515020137700001_800
Control unit: AFC
Rights: Driver
Wednesday, 28 August 2019

Legend

R = read only

RW = read and write

Parameter number	Parameter name	Minimum	Maximum	Default	Unit	Description
AFC-0000	Filling strategy	0	4	1		"Setting the filling strategy: - FRONT2BACK: The transport wagon is to be filled from the front to the back, up to the filling level set by the parameter FILLING_STRATEGY_ - BACK2FRONT: The transport wagon is to be filled from the back to the front, up to the filling level set by the parameter FILLING_STRATEGY_ - FRONT2BACK2FRON The transport wagon is to be loaded initially from the front to the back, but initially only up to the filling leve...
AFC-0001	Transfer data to USB storage device	0	1	0		Transfer internal data storage of the auto-loading system onto a USB storage device.
AFC-0002	Mode	0	1	0		The mode of the auto-loading system is set.
AFC-0003	Additional information on external monitor	0	1	1		Additional information of the auto-loading system is shown on the external monitor.
AFC-0004	Minimum distance from the front wagon edge	0	255	25	cm	The minimum distance from the front wagon edge, which is not filled, is set.

Parameter number	Parameter name	Minimum	Maximum	Default	Unit	Description
AFC-0005	Minimum distance from the rear wagon edge	0	255	25	cm	The minimum distance from the rear wagon edge, which is not filled, is set.
AFC-0006	Aggressiveness	0	100	90	%	Aggressiveness parameter auto-loading system
AFC-0007	Filling during the first pass-through	0	70	70	%	Maximum filling during the first pass-through using the filling strategy "From front to rear back to front" and "From rear to front back to rear". The upper edge of the wagon is regarded as 100%.
AFC-0008	Maximum filling	60	120	100	%	The upper edge of the wagon is regarded as 100%.
AFC-0009	Target point displacement for loading from the side	-10	10	0		The target point displacement for loading from the side is set. (Negative values = side facing harvester, 0 = centre of the wagon, positive values = side facing away from harvester)

Parameter number	Parameter name	Minimum	Maximum	Default	Unit	Description
AFC-0010	Target point displacement on the vehicle transverse axis for loading to the rear	-1000	1000	0	cm	The target point displacement for loading to the rear is set. Negative values displace the target point in the direction of travel to the right. Positive values displace the target point in the direction of travel to the left
AFC-0011	Target point displacement on the vehicle transverse axis for loading to the rear	-1000	1000	0	cm	The target point displacement for loading to the rear is set. Negative values displace the target point to the front of the wagon. Positive values displace the target point to the back of the wagon.
AFC-0023	Video output	0	1	1		

Parameter: BiG X 480 | 530 | 580 | 630

Software version: D25150200731000 15_000
Control unit: CE
Rights: Driver
Tuesday, 27 August 2019

Legend

R = read only

RW = read and write

Parameter number	Parameter name	Minimum	Maximum	Default	Unit	Description
CE-0004	Lighting duration Coming Home function	1	250	6	s	The duration is set for which the ladder lighting is switched on in field mode.
CE-0004	Lighting duration Coming Home function	10	2500	60	s	
CE-0005	Lighting duration Leaving Home function	10	2500	300	s	
CE-0005	Lighting duration Leaving Home function	1	250	30	s	The duration is set for which the machine lighting is switched on by the Leaving Home function.
CE-0007	Pause time in wiper interval mode front	3	60	4	s	
CE-0014	Start cycle front wiper on left/right continuous operation	1	10	3		The number of wiping cycles of the front wiper is set in continuous operation, during which the front wipers left/right carry out a wiping cycle.
CE-0015	Front wiper start cycle on left/right in interval mode	1	10	3		The number of wiping cycles of the front wiper is set in interval mode, during which the front wipers left/ right carry out a wiping cycle.
CE-0023	Pause time in wiper interval mode on left	2	60	4	s	The duration for the pause in wiper interval mode on left is set.
CE-0024	Pause time in wiper interval mode on right	2	60	4	s	The duration for the pause in wiper interval mode on right is set.

Parameter number	Parameter name	Minimum	Maximum	Default	Unit	Description
CE-0025	Pause time in wiper interval mode at rear	2	60	4	s	The duration for the pause in wiper interval mode at rear is set.
CE-0029	Signal generator horn sounded manually in field mode	0	3	0		
CE-0029	Signal generator horn sounded manually in field mode	0	65535	16		
CE-0030	Signal generator for foreign object detection	0	65535	16		
CE-0030	Signal generator for foreign object detection	0	3	0		
CE-0031	Compressed air horn installed	0	3	0		
CE-0031	Compressed air horn installed	0	65535	16		

Parameter: BiG X 480 | 530 | 580 | 630

Software version: D2515020073700009_200
Control unit: DRC
Rights: Driver
Tuesday, 27 August 2019

Legend

R = read only

RW = read and write

Parameter number	Parameter name	Minimum	Maximum	Default	Unit	Description
DRC-9900	Correction of steering angle	-15	15	0	digits	

Parameter: BiG X 480 | 530 | 580 | 630

Software version: D2515020063100033_000
Control unit: KMC
Rights: Driver
Tuesday, 27 August 2019

Legend

R = read only

RW = read and write

Parameter number	Parameter name	Minimum	Maximum	Default	Unit	Description
KMC-0001	Parameter version	0	32767	611		Version of parameters
KMC-0003	Version of application data	0	32767	0		Version of application data
KMC-0024	Prevent spout from turning at same time as spout flap raising/ lowering	0	1	0		
KMC-0039	Mirroring camera automatically	0	1	1		A setting is made to determine whether the camera image is automatically mirrored depending on the spout position.
KMC-0064	Start "Mirroring" or "Parking" functions by double-clicking on the "Automatic spout" key	0	1	0		Setting whether the "Mirroring" or "Parking" function is to be started by double-clicking or clicking once on the "Automatic spout" key.
KMC-0073	Extension installed	0	1	0		
KMC-0080	Speed lowering spout flap level 2	0	100	75	%	
KMC-0081	Speed raising spout flap level 2	0	100	75	%	
KMC-0083	Speed lowering spout flap level 1	0	100	25	%	
KMC-0084	Speed raising spout flap level 1	0	100	25	%	
KMC-0093	Maximum lifting height working position	0	100	40	%	The lifting height is set, below which the lifting unit is in the working position.

Parameter number	Parameter name	Minimum	Maximum	Default	Unit	Description
KMC-0097	Maximum lifting height working position	0	100	60	%	The lifting height is set, below which the lifting unit is in the working position.
KMC-0101	Maximum lifting height working position	0	100	60	%	The lifting height is set, below which the lifting unit is in the working position.
KMC-0105	Maximum lifting height working position	0	100	40	%	The lifting height is set, below which the lifting unit is in the working position.
KMC-0109	Maximum lifting height working position	0	100	60	%	The lifting height is set, below which the lifting unit is in the working position.
KMC-0113	Maximum lifting height working position	0	100	40	%	The lifting height is set, below which the lifting unit is in the working position.
KMC-0117	Maximum lifting height working position	0	100	40	%	The lifting height is set, below which the lifting unit is in the working position.
KMC-0146	Crop type	0	64	16		
KMC-0147	Factor characteristic curve maize NIR sensor	0	30000	10000		
KMC-0148	Offset characteristic curve maize NIR sensor	500	1500	1000		
KMC-0149	Factor characteristic curve grass NIR sensor	0	30000	10000		

Parameter number	Parameter name	Minimum	Maximum	Default	Unit	Description
KMC-0150	Offset characteristic curve grass NIR sensor	500	1500	1000		
KMC-0151	Factor characteristic curve user-defined NIR sensor	0	30000	10000		
KMC-0152	Offset characteristic curve user-defined NIR sensor	500	1500	1000		
KMC-0155	Type moisture sensor	0	2	0		
KMC-0160	Minimum chop length moisture measurement	20	710	100	1/10 mm	
KMC-0161	Maximum chop length moisture measurement	20	710	400	1/10 mm	
KMC-0162	Minimum moisture content	0	100	40	%	
KMC-0163	Maximum moisture content	0	100	90	%	Moisture content at which automatic chop length adjustment ends.
KMC-0271	Spout type	1	6	2		
KMC-0308	Activation of spout height control	0	1	0		Activation of spout height control
KMC-0335	Grease quantity	0	2	0		
KMC-0360	Chop length without gear reduction	20	150	120	1/10 mm	
KMC-0361	Chop length without gear reduction storage 1	20	705	100	1/10 mm	
KMC-0362	Chop length without gear reduction storage 2	20	705	75	1/10 mm	

Parameter number	Parameter name	Minimum	Maximum	Default	Unit	Description
KMC-0367	Number of blades	10	48	28		
KMC-0375	Stop intake/header below diesel engine speed without gear reduction	1200	1500	1200	rpm	The intake and header is automatically stopped below the entered engine speed without gear reduction.
KMC-0432	Chop length adjustment mode	0	2	0		
KMC-0441	Chop length adjustment used	0	2	0		
KMC-0463	Stop intake/header below diesel engine speed when gear reduction is active	1500	1700	1500	rpm	The intake and header are automatically stopped below the entered engine speed when gear reduction is active.
KMC-0464	Chop length when gear reduction active	20	150	120	1/10 mm	The chop length when gear reduction active with the VariLOC cutting length gearbox is set.
KMC-0465	Chop length when gear reduction active storage 1	20	705	100	1/10 mm	The chop length when gear reduction active with the VariLOC cutting length gearbox for storage 1 is set.
KMC-0466	Chop length when gear reduction active storage 2	20	705	75	1/10 mm	The chop length when gear reduction active with the VariLOC cutting length gearbox for storage 2 is set.
KMC-0500	Header profile	0	7	1		
KMC-0501	Current working width	10	2500	10	cm	
KMC-0502	Current number of rows	0	14	0	digits	

Parameter number	Parameter name	Minimum	Maximum	Default	Unit	Description
KMC-0504	Activating side blades	0	1	0		Automatically activate side blades when header is connected.
KMC-0521	Grinding cycles in automatic mode	1	100	5		
KMC-0535	Sensitivity of metal detection	10	100	50	%	
KMC-0536	Duration of metal detection horn	0	10	5	s	
KMC-0541	Sensitivity of RockProtect	10	100	50	%	
KMC-0542	RockProtect	0	1	0		
KMC-0543	Duration of RockProtect horn	0	10	5	s	The duration, which the horn sounds when rock detected, is set.
KMC-0552	Rotating speed level 1	1	100	20	%	The rotating speed of the spout for level 1 is set.
KMC-0562	Hitch attachment mode	0	1	0		
KMC-0563	Hopper mode	0	1	0		
KMC-0571	Sensitivity with row tracer	0	10	4	digits	Sensitivity of the automatic steering is set with row tracer.
KMC-0572	Steering line correction with row tracer (negative=left, positive=right)	-50	50	0	cm	
KMC-0573	Automatic steering system	0	2	0		Automatic steering system
KMC-0577	Automatic mirroring of the steering line correction depending on the spout position	0	1	0		

Parameter number	Parameter name	Minimum	Maximum	Default	Unit	Description
KMC-0613	VariLOC mode	0	2	2		
KMC-0624	Roller distance	5	70	37	1/10 mm	
KMC-0625	Corn conditioner installed	0	2	2		
KMC-0638	Storage temperature for warning message	9000	18000	13000	1/100 °C	
KMC-0642	Time interval cleaning operation	10	180	180	min	The time interval, at which the cleaning operation of the engine fan is called up, is set.
KMC-0643	Duration of cleaning operation	30	480	60	s	The duration, which the engine fan is active during the cleaning operation, is set.
KMC-0647	Duration of fan reversing in cleaning operation	0	1	0		
KMC-0651	Duration of cleaning operation with fan reversing	5	15	10	s	The duration, which the engine fan is active during fan reversing, is set.
KMC-0687	Automatic reduction of the rotational speed when the machine is at a standstill	0	1	0		
KMC-0691	PowerSplit switch type	0	2	0		PowerSplit switch type
KMC-0692	ECO mode in road mode after machine switched on	0	1	1		
KMC-0693	ECO mode in maize mode after machine switched on	0	1	0		

Parameter number	Parameter name	Minimum	Maximum	Default	Unit	Description
KMC-0694	ECO mode in grass mode after machine switched on	0	1	1		
KMC-0697		0	4	0		
KMC-0717	Using additional tank	0	1	0		
KMC-0719	Using side tank	0	1	0		
KMC-0819	Mode	0	3	0		The mode of the 12V switch output for external silage additives units is set.
KMC-0821	Mode	0	3	0		
KMC-0822	Dosing quantity "continuously active"	5	100	20	%	
KMC-0823	Dosing quantity	500	15000	1000	1/1000 l/min	The dosing quantity of the silage additives unit coarse dosing per unit of time is set.
KMC-0825	Dosing quantity	250	3000	1000	1/1000 l/t	The dosing quantity of the silage additives unit coarse dosing per unit of mass (CropControl) is set.
KMC-0826	Dosing quantity unit	0	1	0		Setting the unit in which the dosing quantity is to be entered.
KMC-0830	Duration of "crop flow cleaning headland"	1	300	20	s	
KMC-0831	Calibration of flow rate	1	4000	1000	ml	
KMC-0832	Dosing quantity "crop flow cleaning headland"	0	100	80	%	
KMC-0834	Switch-on/off delay	0	100	2	s	

Parameter number	Parameter name	Minimum	Maximum	Default	Unit	Description
KMC-0837	Duration of "crop flow cleaning headland"	0	100	2	s	
KMC-0838	Switch-on/off delay	0	100	2	s	
KMC-0841	Minimum filling level for warning message	0	100	5	%	
KMC-0852	Maximum speed	30	200	100	1/10 km/h	
KMC-0865	Diesel engine speed	1400	1850	1675	rpm	
KMC-0876	Aggressiveness	10	100	50	%	
KMC-0898	Valves in "continuously active" mode	0	4	4		
KMC-0899	Valves in "crop flow cleaning headland" mode	0	4	4		
KMC-0928	Mode	0	2	0		
KMC-0929	Dosing quantity unit	0	1	0		
KMC-0930	Dosing quantity	1800	3500	2500	1/1000 l/h	The dosing quantity in "continuously active" mode is set.
KMC-0931	Dosing quantity	3200	10000	6000	1/1000 l/h	The dosing quantity in "continuously active" mode is set.
KMC-0932	Dosing quantity	8000	14000	10000	1/1000 l/h	The dosing quantity in "continuously active" mode is set.
KMC-0934	Dosing quantity	1800	3500	2500	1/1000 l/h	The dosing quantity per unit of time is set.
KMC-0935	Dosing quantity	3200	10000	6000	1/1000 l/h	The dosing quantity per unit of time is set.
KMC-0936	Dosing quantity	8000	14000	10000	1/1000 l/h	The dosing quantity per unit of time is set.

Parameter number	Parameter name	Minimum	Maximum	Default	Unit	Description
KMC-0938	Dosing quantity	15	300	30	ml/t	The dosing quantity per unit of mass (CropControl) is set.
KMC-0939	Dosing quantity	15	300	60	ml/t	The dosing quantity per unit of mass (CropControl) is set.
KMC-0940	Dosing quantity	15	300	90	ml/t	The dosing quantity per unit of mass (CropControl) is set.
KMC-0942	Nozzle type	0	2	1		The nozzle type which has been installed on the machine is set.
KMC-0946	Refilled quantity	0	130	0	1/10 l	
KMC-0947	Calibration of flow rate	1	4000	1000	ml	
KMC-1019	Calibration value	100	1000	100	kg/m³	The calibration value, which is determined during counterweighing, is set.
KMC-1031	Minimum excursion intake rollers for weighing grass	0	30	5	mm	
KMC-1038	Minimum excursion intake rollers for weighing maize	0	30	5	mm	
KMC-1045	Minimum excursion intake rollers for weighing direct cut header	0	30	5	mm	
KMC-1052	Minimum excursion intake rollers for weighing other header	0	30	5	mm	

Parameter number	Parameter name	Minimum	Maximum	Default	Unit	Description
KMC-1100	Sensitivity of the automatic counterblade adjustment	0	100	85	%	
KMC-1101	Sensitivity of the automatic counterblade adjustment	0	100	85	%	
KMC-1102	Sensitivity of the automatic counterblade adjustment	0	100	85	%	
KMC-1103	Sensitivity of the automatic counterblade adjustment	0	100	85	%	
KMC-1104	Sensitivity of the automatic counterblade adjustment	0	100	85	%	
KMC-1105	Sensitivity of the automatic counterblade adjustment	0	100	85	%	
KMC-1106	Sensitivity of the automatic counterblade adjustment	0	100	85	%	
KMC-1197	Chop length adjustment mode	0	2	0		
KMC-1252	Chop length adjustment mode	0	2	0		
KMC-1307	Chop length adjustment mode	0	2	0		
KMC-1392	Chop length adjustment mode	0	2	0		

Parameter number	Parameter name	Minimum	Maximum	Default	Unit	Description
KMC-1447	Chop length adjustment mode	0	2	0		
KMC-1502	Chop length adjustment mode	0	2	0		
KMC-1558	Corn conditioner type	0	3	0		
KMC-1559	Automatically detected corn conditioner type	0	240	0		
KMC-1625	Function assignment keys M1/M2 in field or maintenance mode	0	13	0		
KMC-1626	Function assignment momentary foot switch	0	15	0		Function assignment momentary foot switch
KMC-1627	Function assignment keys M1/M2 in neutral/road mode	0	1	0		
KMC-1629	Operation of the spout via navigation module	0	1	0		
KMC-1635	Minimum chop length maturity level detection	20	710	100	1/10 mm	
KMC-1636	Maximum chop length maturity level detection	20	710	400	1/10 mm	
KMC-1637	Minimum degree of maturity	0	100	35	%	The degree of maturity at which the automatic chop length adjustment starts
KMC-1638	Maximum degree of maturity	0	100	70	%	The degree of maturity is set at which the automatic chop length adjustment ends.
KMC-1639	AutoScan installed	0	1	1		

Parameter number	Parameter name	Minimum	Maximum	Default	Unit	Description
KMC-1670	Additional axle installed	0	1	0		
KMC-1684	Rotational speed	300	700	500	rpm	
KMC-1744	Speed control depending on the driving speed	0	1	0		
KMC-1798	Speed control depending on the driving speed	0	1	0		
KMC-1852	Speed control depending on the driving speed	0	1	0		
KMC-1906	Speed control depending on the driving speed	0	1	0		
KMC-1960	Speed control depending on the driving speed	0	1	0		
KMC-2014	Speed control depending on the driving speed	0	1	0		
KMC-2069	Speed control depending on the driving speed	0	1	0		
KMC-2070	Rotational speed change per km/h	1	1000	50	rpm	
KMC-2233	Working width	10	2500	800	cm	
KMC-2237	Row spacing	1	100	75	cm	
KMC-2238	Number of rows	1	22	10	digits	
KMC-2240	Row spacing	1	100	75	cm	
KMC-2241	Number of rows	1	22	10	digits	
KMC-2242	Working width	10	2500	620	cm	

Parameter number	Parameter name	Minimum	Maximum	Default	Unit	Description
KMC-2246	Row spacing	1	100	75	cm	
KMC-2247	Number of rows	1	22	10	digits	Number of rows of the header
KMC-2248	Working width	10	2500	10	cm	
KMC-2249	Row spacing	0	100	0	cm	
KMC-2250	Number of rows	0	14	0	digits	Number of rows of the header
KMC-2251	Working width	10	2500	10	cm	
KMC-2252	Row spacing	0	100	0	cm	
KMC-2253	Number of rows	0	14	0	digits	Number of rows of the header
KMC-2254	Automatically "raise crop press roller unit" when reversing header	0	1	1		
KMC-2255	Duration of "raise crop press roller unit" when reversing header	0	10000	4000	ms	
KMC-2268	Automatically align pendulum tube when folding in	0	1	1		
KMC-2269	Automatically align pendulum tube when folding in	0	1	1		
KMC-2270	Automatically align pendulum tube when folding in	0	1	1		
KMC-2271	Automatically align pendulum tube when folding in	0	1	0		
KMC-2272	Automatically align pendulum tube when folding in	0	1	1		

Parameter number	Parameter name	Minimum	Maximum	Default	Unit	Description
KMC-2273	Automatically align pendulum tube when folding in	0	1	0		
KMC-2274	Automatically align pendulum tube when folding in	0	1	0		
KMC-2276	Automatically adjust lifting unit height when folding in	0	1	1		
KMC-2277	Automatically adjust lifting unit height when folding in	0	1	1		
KMC-2279	Automatically adjust lifting unit height when folding in	0	1	1		
KMC-2318	Middle discharge distance	1	60	50	%	
KMC-2319	High discharge distance	61	100	100	%	
KMC-2320	Discharge distance	1	3	1		The discharge distance of the discharge accelerator is set.

Parameter: BiG X 480 | 530 | 580 | 630

Software version: D25150200738000 22_300
Control unit: LUC
Rights: Driver
Tuesday, 27 August 2019

Legend

R = read only

RW = read and write

Parameter number	Parameter name	Minimum	Maximum	Default	Unit	Description
LUC-9900	Control type	0	2	0		Control type of the lifting unit
LUC-9901	Height of distance control	10	100	25	%	The setpoint value for controlling the distance between the maize header and ground is set.
LUC-9902	Height of position control	15	90	25	%	The setpoint value for controlling the lifting unit relative to the machine is set.
LUC-9903	Pressure of bearing pressure control	-25	50	10	%	The setpoint value for controlling the bearing pressure is set. At 100% bearing pressure the total weight of the header is on the ground.
LUC-9904	Pressure of bearing pressure control	-25	25	10	%	The setpoint value for controlling the bearing pressure is set. At 100% bearing pressure the total weight of the header is on the ground.
LUC-9905	Active vibration damping	0	1	1		The active vibration damping when driving on roads is activated or deactivated.
LUC-9906	Automatic raising mode	0	2	1		Setting as to whether and when the lifting unit is to be lifted automatically.
LUC-9907	External ground tracers installed	0	1	1		

Parameter number	Parameter name	Minimum	Maximum	Default	Unit	Description
LUC-9908	Mode of the pendulum tube for lowering	0	2	0		The behaviour of the pendulum tube for automatic lowering is set. Activated/ deactivated by simultaneously pressing the keys pendulum tube left/ right or by manual override.
LUC-9909	Mode of the pendulum tube for automatic lifting	0	2	0		The behaviour of the pendulum tube for automatic lifting is set. Activated/ deactivated by simultaneously pressing the keys pendulum tube left/ right or by manual override.
LUC-9910	Speed automatic lifting	0	100	80	%	
LUC-9911	Speed manual lifting Level 2	0	100	70	%	
LUC-9912	Speed manual lifting Level 1	0	100	40	%	
LUC-9913	Speed automatic lowering	0	100	80	%	
LUC-9914	Speed manual lowering Level 2	0	100	80	%	
LUC-9915	Speed manual lowering Level 1	0	100	40	%	
LUC-9916	Speed lower pendulum tube on right	5	50	25	%	

Parameter number	Parameter name	Minimum	Maximum	Default	Unit	Description
LUC-9917	Speed lower pendulum tube on left	5	50	25	%	
LUC-9920	Mode of the pendulum tube for manual lifting	0	2	0		The behaviour of the pendulum tube for manual lifting of the header XDisc is set.
LUC-9923	Middle ground tracer installed	0	1	0		

Parameter: BiG X 480 | 530 | 580 | 630

Software version: D2515020063200029_000
Control unit: TRM
Rights: Driver
Tuesday, 27 August 2019

Legend

R = read only

RW = read and write

Parameter number	Parameter name	Minimum	Maximum	Default	Unit	Description
TRM-0100	Design	0	2	0		The design of the user interfaces is set on the terminal.
TRM-0200	Language	1029	2070	2057		
TRM-0300	Time	0	65535	0	time	
TRM-0301	Date	0	65535	0	date	
TRM-0400	System of units	0	2	0		
TRM-0401	Chop length	0	2	0		
TRM-0402	Roller distance corn conditioner	0	2	0		
TRM-0501	Frequency internal buzzer	800	3000	3000	Hz	
TRM-0502	Internal buzzer volume	10	100	100	%	
TRM-0600	Maintenance interval	200	1000	500	h	The maintenance interval of the diesel engine is set.
TRM-0700	Printer type	0	1	0		
TRM-0800	Automatic climate control installed	0	1	0		
TRM-0801	Internal temperature	1500	3000	2100	1/100 °C	
TRM-0802	Fan rotational speed	60	100	60	%	
TRM-0803	Automatic climate control active	0	1	0		
TRM-0804	ECON mode	0	1	0		
TRM-0805	Fan mode	0	1	0		
TRM-0900	KRONE SmartConnect installed	0	1	0		
TRM-1000	Information field 1	0	36	2		
TRM-1001	Information field 2	0	36	0		

Parameter number	Parameter name	Minimum	Maximum	Default	Unit	Description
TRM-1002	Information field 3	0	36	0		
TRM-1003	Information field 4	0	36	0		
TRM-1004	Information field 5	0	36	0		
TRM-1005	Information field 6	0	36	0		
TRM-1006	Information field 7	0	36	0		
TRM-1007	Information field 8	0	36	0		
TRM-1008	Information field 9	0	36	0		
TRM-1009	Information field 10	0	36	0		
TRM-1100	Number of cameras	1	2	1		
TRM-1101	Camera automatically mirror spout	0	1	0		
TRM-1102	Camera mirror spout	0	1	0		
TRM-1103	Camera system installed	0	1	0		
TRM-1104	Show camera image automatically for reversing	0	1	1		
TRM-1105	Mirror rear-view camera	0	1	0		
TRM-1201	Brightness operating elements day design	4	100	100	%	The lighting intensity of the operating elements in day design is set.
TRM-1202	Brightness operating elements night design	4	100	40	%	The lighting intensity of the operating elements in night design is set.
TRM-1203	Brightness control lever night design	4	100	100	%	
TRM-1900	Mirror heating	0	2	0		

38 Index

Icons

Numerical

A

B

C

D

E

F

G

H

I

J

K

L

M

N

O

P

Q

R

S

T

U

V

W

X

KRONE

THE POWER OF GREEN

Maschinenfabrik

Bernard Krone GmbH & Co. KG

Heinrich-Krone-Straße 10
D-48480 Spelle

Postfach 11 63
D-48478 Spelle

+49 (0) 59 77 / 935-0

+49 (0) 59 77 / 935-339

www.landmaschinen.krone.de

V.11